SITE NUMBER: CVL03434

SITE NAME: SWEENEY'S CROSSING

7800 STEPHANIE LANE
SOMERSET, CA 95684
JURISDICTION: EL DORADO COUNTY

SITE TYPE: MONOPINE/SHELTER

PROJECT DESCRIPTION

NEW SITE BUILD UNMANNED TELECOMMUNICATIONS FACILITY.

1. BRING POWER / TELCO / FIBER TO SITE LOCATION
2. GRAVEL ROAD IMPROVEMENT FROM ROW
3. 35'X40' FENCED LEASE AREA
4. INSTALL AT&T APPROVED PRE-MANUFACTURED EQUIPMENT SHELTER AND ASSOCIATED INTERIOR EQUIPMENT
5. ADD (1) NEW GPS UNITS
6. ADD 160'-0" MONOPINE
7. ADD (12) ANTENNAS (4) PER ALPHA, BETA, GAMMA SECTOR
8. ADD (21) RRUS
9. ADD (4) SURGE SUPPRESSORS
10. ADD (2) FUTURE 4' MICROWAVE DISHES
11. ADD 6'-0" HIGH CHAIN LINK FENCE W/ VYNAL SLATS
12. ADD 35KW LP PROPANE GENERATOR
13. ADD 500 GAL LP PROPANE STORAGE TANK

CODE COMPLIANCE

ALL WORK AND MATERIALS SHALL BE PERFORMED AND INSTALLED IN ACCORDANCE WITH THE CURRENT EDITIONS OF THE FOLLOWING CODES AS ADOPTED BY THE LOCAL GOVERNING AUTHORITIES. NOTHING IN THESE PLANS IS TO BE CONSTRUCTED TO PERMIT WORK NOT CONFORMING TO THESE CODES:

1. 2016 CALIFORNIA ADMINISTRATIVE CODE, PART 1, TITLE 24, C.C.R. (CALIFORNIA CODE OF REGULATIONS)
2. 2016 CALIFORNIA BUILDING CODE (CBC), PART 2, TITLE 24, C.C.R. (VOLUMES 1 & 2), (2015 INTERNATIONAL BUILDING CODE)
3. 2016 CALIFORNIA ELECTRICAL CODE (CEC), PART 3, TITLE 24, C.C.R., (2014 NATIONAL ELECTRICAL CODE)
4. 2016 CALIFORNIA MECHANICAL CODE (CMC), PART 4, TITLE 24, C.C.R., (2015 UNIFORM MECHANICAL CODE)
5. 2016 CALIFORNIA PLUMBING CODE (CPC), PART 5, TITLE 24, C.C.R., (2015 UNIFORM PLUMBING CODE)
6. 2016 CALIFORNIA ENERGY CODE (CEC), PART 6, TITLE 24, C.C.R.
7. 2016 CALIFORNIA HISTORICAL BUILDING CODE, PART 8, TITLE 24, C.C.R., (2015 INTERNATIONAL BUILDING CODE)
8. 2016 CALIFORNIA FIRE CODE, PART 9, TITLE 24 C.C.R., (2015 INTERNATIONAL FIRE CODE)
9. 2016 CALIFORNIA EXISTING BUILDING CODE, PART 10, TITLE 24, C.C.R., (2015 INTERNATIONAL BUILDING CODE)
10. 2016 CALIFORNIA GREEN BUILDING STANDARDS CODE, PART 11, TITLE 24 C.C.R., (CALGreen)
11. 2016 CALIFORNIA REFERENCED STANDARDS, PART 12, TITLE 24 C.C.R.
12. ANSI/EIA-TIA-222-G
13. ALONG WITH ANY OTHER APPLICABLE LOCAL & STATE LAWS AND REGULATIONS.

DISABLED ACCESS REQUIREMENTS

THIS FACILITY IS UNMANNED & NOT FOR HUMAN HABITATION. DISABLED ACCESS & REQUIREMENTS ARE NOT REQUIRED IN ACCORDANCE WITH CALIFORNIA STATE BUILDING CODE TITLE 24 PART 2, SECTION 11B-203.4

OCCUPANCY AND CONSTRUCTION TYPE

OCCUPANCY : U (UNMANNED)

CONSTRUCTION TYPE: V-B

PROJECT INFORMATION

PROPERTY INFORMATION:
SITE NAME: SWEENEY'S CROSSING
SITE NUMBER: CVL03434

SEARCH RING: SWEENY'S CROSSING
FA# 13787575
SITE ADDRESS: 7800 STEPHANIE LANE
SOMERSET, CA 95684

A.P.N. NUMBER: 041-900-07

CURRENT USE: SINGLE FAMILY RESIDENTIAL, RURAL RESEDENTIAL

PROPOSED USE: (U) UNMANNED TELECOMMUNICATION FACILITY

JURISDICTION: EL DORADO COUNTY

LATITUDE: N 38° 38' 51.60"

LONGITUDE: W 120° 35' 23.23"

GROUND ELEVATION: ±3187.1 FT. AMSL

PROPERTY OWNER:
ANTHONY & LISA CIANCHETTA
7800 STEPHANIE LANE
SOMERSET, CA 95684

POWER AGENCY:
PG&E
PG&E CORPORATION
1 MARKET STREET, SPEAR TOWER
SAN FRANCISCO, CA 94105
PH: 1-800-743-5000

TELEPHONE AGENCY:
AT&T
525 MARKET STREET, SPEAR TOWER
SAN FRANCISCO, CA 94105
PH: 1-800-310-2355

RFDS DATED 02-15-2017, ISSUE 1.0
REVISION 1.00.00

VICINITY MAP

SPECIAL INSPECTIONS

PROJECT TEAM

APPLICANT / LESSEE:
AT&T
5001 EXECUTIVE PARKWAY
SAN RAMON, CA 945834

RF ENGINEER:
AT&T CONTACT: MUHAMMAD AHMED
EMAIL: MA912P@ATT.COM

PROJECT MGR.:
EPIC WIRELESS
CONTACT: NICK TAGAS
EMAIL: NICK.TAGAS@EPICWIRELESS.NET
PH: (916) 990-1446

SITE ACQUISITION:
COMPANY: EPIC WIRELESS
CONTACT: JARED KEARSLEY (ZONING MGR.)
EMAIL: JARED. KEARSLEY@EPICWIRELESS.NET
CELL: (916) 755-1326

CONSTRUCTION MGR.:
COMPANY: EPIC WIRELESS
CONTACT: PETE MANAS
EMAIL: PETE.MANAS@EPICWIRELESS.NET
PH: (530) 383-5957

A&E DESIGN GROUP:
COMPANY: EPIC WIRELESS
CONTACT: CARL SYLVESTER
CARL.SYLVESTER@EPICWIRELESS.NET
PH: (530) 933-2763

ARCHITECT / ENGINEER:
ADAPTIVE RE-USE ENGINEERING
CONTACT: CRAIG HORNER, PE 84674
EMAIL: CRAIGMHORNER@YAHOO.COM
PH: (214) 407-3184

CIVIL VENDOR.:
VINCULUMS CM
CONTACT: KEN ABEL
EMAIL: KABEL@VINCULUMS.COM
PH: (916) 844-4602

DIRECTIONS FROM AT&T

DIRECTIONS FROM AT&T's OFFICE AT 2600 CAMINO RAMON, SAN RAMON, CA

2600 CAMINO RAMON
SAN RAMON, CA 94583

1. GET ON I-680 N FROM CAMINO RAMON AND BOLLINGER CANYON RD 4 MIN (1.2 MI) HEAD EAST 157 FT
2. TURN RIGHT TOWARD CAMINO RAMON 0.2 MI
3. TURN RIGHT ONTO CAMINO RAMON 0.2 MI
4. CONTINUE STRAIGHT TO STAY ON CAMINO RAMON 0.1 MI
5. TURN RIGHT ONTO BOLLINGER CANYON RD 0.4 MI
6. USE THE RIGHT 2 LANES TO MERGE ONTO I-680 N VIA THE RAMP TO SACRAMENTO 0.3 MI
7. FOLLOW I-680 N, I-80 E AND US-50 E TO MISSOURI FLAT RD IN EL DORADO COUNTY. TAKE EXIT 44A FROM US-50 E 1 H 47 MIN (121 MI)
8. MERGE ONTO I-680 N 10.6 MI
9. KEEP LEFT TO STAY ON I-680 N 5.0 MI
10. KEEP LEFT AT THE FORK TO STAY ON I-680 N 5.9 MI
11. KEEP LEFT AT THE FORK TO CONTINUE ON I-680 14.4 MI
12. USE ANY LANE TO TAKE EXIT 71A TOWARD I-80 E/SACRAMENTO 0.4 MI
13. MERGE ONTO I-80 E 29.0 MI
14. KEEP LEFT AT THE FORK TO STAY ON I-80 E 12.1 MI
15. KEEP LEFT AT THE FORK TO CONTINUE ON I-80BL E/US-50 E/CAPITAL CITY FREEWAY, FOLLOW SIGNS FOR INTERSTATE 80 BUSINESS/SACRAMENTO/SOUTH LAKE TAHOE 5.2 MI
16. CONTINUE ONTO US-50 E 38.2 MI
17. TAKE EXIT 44A FOR MISSOURI FLAT RD 0.2 MI
18. TAKE PLEASANT VALLEY RD AND HAPPY VALLEY RD TO STEPHANIE LN 49 MIN (20.7 MI)
19. USE THE RIGHT 2 LANES TO TURN RIGHT ONTO MISSOURI FLAT RD 1.7 MI
20. TURN LEFT ONTO PLEASANT VALLEY RD 0.6 MI
21. CONTINUE STRAIGHT TO STAY ON PLEASANT VALLEY RD 9.5 MI
22. TURN RIGHT ONTO MT AUKUM RD 2.0 MI
23. TURN LEFT ONTO HAPPY VALLEY CUTOFF RD 0.7 MI
24. SLIGHT LEFT ONTO HAPPY VALLEY RD 3.3 MI
25. TURN RIGHT TO STAY ON HAPPY VALLEY RD 2.4 MI
26. TURN RIGHT ONTO STEPHANIE LN
27. DESTINATION WILL BE ON THE RIGHT 0.7 MI

7800 STEPHANIE LN
SOMERSET, CA 95684

APPROVALS

APPROVED BY:	INITIALS:	DATE:
AT&T:		
VENDOR:		
R.F.:		
LEASING / LANDLORD:		
ZONING:		
CONSTRUCTION:		
POWER / TELCO:		
PG&E:		

SHEET INDEX

		REV
T-1	TITLE SHEET	
GN-1	GENERAL NOTES	
C-1	SITE SURVEY (BY OTHERS) FOR REFERENCE ONLY	
C-2	EROSION CONTROL NOTES	
C-2.1	GRADING PLAN & DETAILS	
A-1	OVERALL SITE PLAN - EXTERIOR EQUIPMENT SHELTER	
A-1.1	SITE PLAN - EXTERIOR EQUIPMENT SHELTER	
A-2	EQUIPMENT AREA PLAN - EXTERIOR EQUIPMENT SHELTER	
A-3	ANTENNA PLAN & DETAILS - MONOPINE	
A-4.1	PROPOSED MONOPINE NORTH - SOUTH ELEVATION	
A-4.2	PROPOSED MONOPINE WEST - EAST ELEVATION	

Site 3-Exhibit F

GENERAL CONTRACTOR NOTES

DO NOT SCALE DRAWINGS

THESE DRAWINGS ARE FORMATTED TO BE FULL SIZE AT 24" x 36". CONTRACTOR SHALL VERIFY ALL PLANS AND EXISTING DIMENSIONS AND CONDITIONS ON THE JOBSITE AND SHALL IMMEDIATELY NOTIFY THE ARCHITECT/ENGINEER IN WRITING OF ANY DISCREPANCIES BEFORE PROCEEDING WITH THE WORK OR MATERIAL ORDERS OR BE RESPONSIBLE FOR THE SAME.

DIGALERT
800-227-2600
Call 2 Full Working Days In Advance

Issued For:
SWEENEY'S CROSSING
7800 STEPHANIE LANE
SOMERSET, CA 95684

PREPARED FOR
at&t
2600 Camino Ramon, 4W850 N
San Ramon, California 94583

EPIC WIRELESS GROUP

AT&T SITE NO:	CVL03434
PROJECT NO:	13787575
DRAWN BY:	CES
CHECKED BY:	CES

REV	DATE	DESCRIPTION
0	03/29/17	ZD 90%
0	05/08/17	ZD 100%
1	05/31/17	ZD 100% EASEMENT CHANGE

Licensor:
REGISTERED PROFESSIONAL ENGINEER
CRAIG M. HORNER
No. 84674
CIVIL
STATE OF CALIFORNIA

IT IS A VIOLATION OF LAW FOR ANY PERSON, UNLESS THEY ARE ACTING UNDER THE DIRECTION OF A LICENSED PROFESSIONAL ENGINEER, TO ALTER THIS DOCUMENT.

Engineer:
ADAPTIVE RE-USE ENGINEERING
Craig Horner, PE 84674
214-407-3184
3112 LEATHA WAY
SACRAMENTO, CA 95821
craigmhorner@yahoo.com

SHEET TITLE:
TITLE SHEET

SHEET NUMBER:
T-1

1 / C1 SITE PLAN
SCALE: 1" = 200'

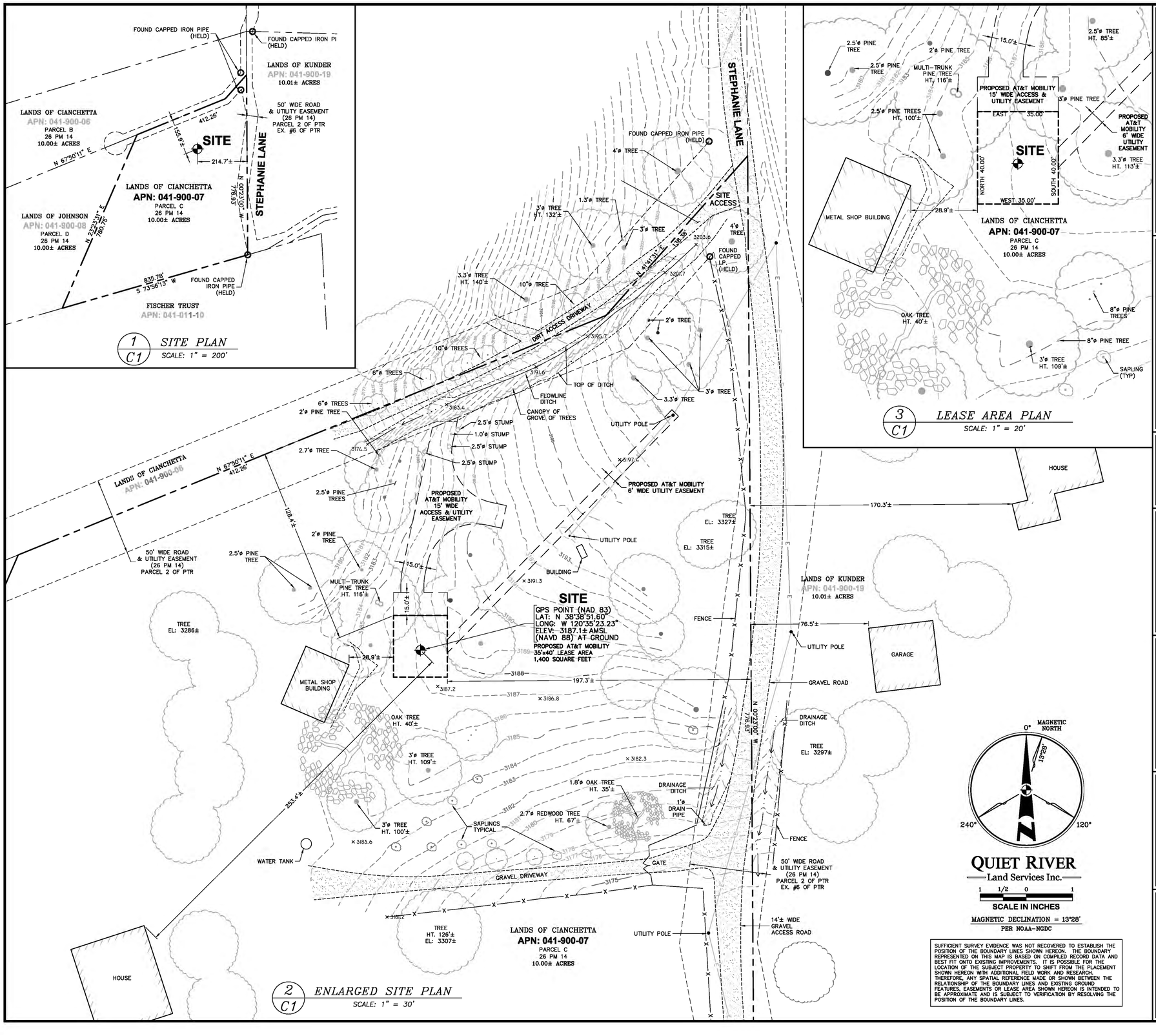

2 / C1 ENLARGED SITE PLAN
SCALE: 1" = 30'

3 / C1 LEASE AREA PLAN
SCALE: 1" = 20'

QUIET RIVER
Land Services Inc.
1 1/2 0 1
SCALE IN INCHES
MAGNETIC DECLINATION = 13°28'
PER NOAA-NGDC

SUFFICIENT SURVEY EVIDENCE WAS NOT RECOVERED TO ESTABLISH THE POSITION OF THE BOUNDARY LINES SHOWN HEREON. THE BOUNDARY REPRESENTED ON THIS MAP IS BASED ON COMPILED RECORD DATA AND BEST FIT ONTO EXISTING IMPROVEMENTS. IT IS POSSIBLE FOR THE LOCATION OF THE SUBJECT PROPERTY TO SHIFT FROM THE PLACEMENT SHOWN HEREON WITH ADDITIONAL FIELD WORK AND RESEARCH. THEREFORE, ANY SPATIAL REFERENCE MADE OR SHOWN BETWEEN THE RELATIONSHIP OF THE BOUNDARY LINES AND EXISTING GROUND FEATURES, EASEMENTS OR LEASE AREA SHOWN HEREON IS INTENDED TO BE APPROXIMATE AND IS SUBJECT TO VERIFICATION BY RESOLVING THE POSITION OF THE BOUNDARY LINES.

VICINITY MAP
NOT TO SCALE

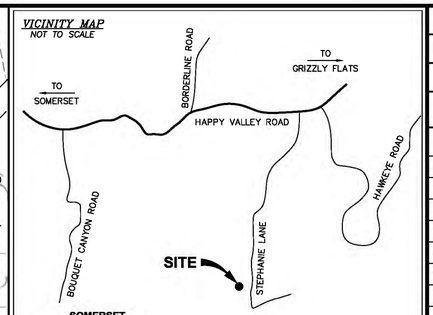

PROPERTY INFORMATION

Owner: ANTHONY & LISA CIANCHETTA
Address: 7800 STEPHANIE LANE
SOMERSET, CA 95684

Site: CVL03434 / SWEENEY'S CROSSING
Address: 7800 STEPHANIE LANE
SOMERSET, CA 95684

Assessor's Parcel Number: 041-900-07

Height of Building/Tower: N/A

Title Report:
TITLE REPORT FOR THIS PROPERTY WAS PROVIDED BY FIRST AMERICAN TITLE COMPANY REPORT NO. 5026900-5391585, DATED AS OF FEBRUARY 6, 2017.

Legal Description:
PROPERTY SITUATED IN THE CITY OF SOMERSET, COUNTY OF EL DORADO, STATE OF CALIFORNIA.

FEMA FLOOD ZONE DESIGNATION
National Flood Insurance Program

County: EL DORADO — Effective Date: SEPTEMBER 26, 2008
Community-Panel Number: 06017C-0825-E
The Flood Zone Designation for this site as plotted by scale is:

ZONE X (no shading) — Areas determined to be outsidethe 0.2% annual chance floodplain.

SURVEY DATA

NAD 83 Datum:
Lat: N 38°38'51.60" Long: W 120°35'23.23"
Datum Base: NAD 83 Equipment Used: CHCX90D-OPUS Receiver (See Note 2)
Site Ground Elevation: 3187.1± AMSL (NAVD88) AT SITE LOCATION
Basis of Elevations:
GLOBAL POSITIONING SYSTEM (GPS)
(SEE NOTE 2)
Basis of Bearings:
CALIFORNIA COORDINATES ZONE II AND FOUND MONUMENTS AS SHOWN ON THAT CERTAIN PARCEL MAP FILED IN BOOK 26 AT PAGE 14 IN THE RECORDS OF EL DORADO COUNTY.
Date of Field Survey: MARCH 13, 2017

NOTES

1.) This is not a boundary survey. This is a specialized topographic map with property lines and easements being a graphic depiction of various information gathered from preliminary title reports, back-up documents of record, maps and available monuments found during the field survey. No property monuments were set. No title research was performed by Quiet River Land Services, Inc.

2.) The latitude, longitude and elevation shown hereon were derived from post-processed L-1/L-2 data collected using Novatar Global Positioning System (GPS) and a CHCX90D-OPUS Receiver. CHC Navigation specifications report decimeter level accuracy (horizontally) when data is properly collected and processed. (Elevation = ±3.0 feet.)

3.) Unless otherwise noted, no underground utility locating service company was contacted prior to this map being prepared; therefore, there may be non-visible or obscure utilities existing on the property not shown on this map — so CALL BEFORE YOU DIG.

4.) Any electronic digital media provided by Quiet River Land Services, Inc. to our client is a courtesy and is not to be reproduced, distributed, sold, altered, revised, edited or amended without the express written consent of an Officer of Quiet River Land Services, Inc. Further, only the final stamped, signed and dated original "hard copy" version of our survey or map is considered to be our legally recognized product.

SURVEYOR'S STATEMENT

I, the undersigned, a Registered Professional Land Surveyor licensed under the laws of the State of California do hereby state that the information, measurements, easements, record boundary lines, bearings and distances as shown hereon are based upon a field survey as dated above and upon items of public record and data contained in a title report, as referenced. Furthermore, the Latitude and Longitude coordinates are reported in NAD 83 Datum and are accurate to within ±15 feet horizontally, and the ground elevation, reported in NAVD 1988 Datum, is within ±3 feet vertically. The coordinate values and elevations are within the 1-A Accuracy Code designation as listed in the A.S.A.C. Information Sheet 91:003 and are accurate to the best of my knowledge and belief.

SIGNATURE DATE

LEGEND

APN:	ASSESSOR'S PARCEL NUMBER		ASPHALT
CP	CONTROL POINT		CONCRETE
EL.	ELEVATION		
FH	FIRE HYDRANT	△	CONTROL POINT
FND.	FOUND	○	FOUND MONUMENT
HT.	HEIGHT		
MON.	MONUMENT		GPS POINT
(M-M)	MONUMENT TO MONUMENT	P 15.3 / R 12.3	PARAPET/ROOF ELEVATIONS
P.O.B.	POINT OF BEGINNING		
P.O.C.	POINT OF COMMENCEMENT	× 12.3	SPOT ELEVATION
PP	POWER POLE		
(TYP.)	TYPICAL		TEMPORARY BENCHMARK

DATE: MAY 31, 2017
DRAWN BY: MAS
FILE NO.: EPIC1715

REVISIONS

DATE	DESCRIPTION	INITIAL
03/17/17	90% ISSUE	MAS
04/20/17	ADDITIONAL TOPO	MAS
05/02/17	100% ISSUE	RO
05/04/17	REVISE ACCESS EASEMENT	RO
05/31/17	REVISE ACCESS EASEMENT	RO

at&t
AT&T MOBILITY
5001 Executive Parkway
San Ramon, CA 94583

QUIET RIVER
Land Services Inc.
11501 Dublin Boulevard, Suite 200
Dublin, CA 94568
(925) 734-6788 Phone

EXISTING SITE CONDITIONS

CVL03434
SWEENEY'S CROSSING

7800 STEPHANIE LANE
SOMERSET, CA 95684

C1
OF 1 SHEET

Y:\EPIC1715\dwg\EPIC1715.dwg May, 31, 2017 - 12:26am machwartz

GENERAL CONSTRUCTION NOTES:

1. PLANS ARE INTENDED TO BE DIAGRAMMATIC OUTLINE ONLY, UNLESS NOTED OTHERWISE. THE WORK SHALL INCLUDE FURNISHING MATERIALS, EQUIPMENT, APPURTENANCES AND LABOR NECESSARY TO COMPLETE ALL INSTALLATIONS AS INDICATED ON THE DRAWINGS.

2. THE CONTRACTOR SHALL OBTAIN, IN WRITING, AUTHORIZATION TO PROCEED BEFORE STARTING WORK ON ANY ITEM NOT CLEARLY DEFINED OR IDENTIFIED BY THE CONTRACT DOCUMENTS.

3. CONTRACTOR SHALL CONTACT USA (UNDERGROUND SERVICE ALERT) AT (800) 227-2600, FOR UTILITY LOCATIONS, 48 HOURS BEFORE PROCEEDING WITH ANY EXCAVATION, SITE WORK OR CONSTRUCTION.

4. THE CONTRACTOR SHALL INSTALL ALL EQUIPMENT AND MATERIALS IN ACCORDANCE WITH MANUFACTURER'S RECOMMENDATIONS UNLESS SPECIFICALLY INDICATED OTHERWISE, OR WHERE LOCAL CODES OR REGULATIONS TAKE PRECEDENCE.

5. ALL CONSTRUCTION SHALL BE IN ACCORDANCE WITH THE CBC/UBC'S REQUIREMENTS REGARDING EARTHQUAKE RESISTANCE, FOR, BUT NOT LIMITED TO, PIPING, LIGHT FIXTURES, CEILING GRID, INTERIOR PARTITIONS, AND MECHANICAL EQUIPMENT. ALL WORK MUST COMPLY WITH LOCAL EARTHQUAKE CODES AND REGULATIONS.

6. REPRESENTATIONS OF TRUE NORTH, OTHER THAN THOSE FOUND ON THE PLOT OF SURVEY DRAWINGS, SHALL NOT BE USED TO IDENTIFY OR ESTABLISH BEARING OF TRUE NORTH AT THE SITE. THE CONTRACTOR SHALL RELY SOLELY ON THE PLOT OF SURVEY DRAWING AND ANY SURVEYOR'S MARKINGS AT THE SITE FOR THE ESTABLISHMENT OF TRUE NORTH, AND SHALL NOTIFY THE ARCHITECT / ENGINEER PRIOR TO PROCEEDING WITH THE WORK IF ANY DISCREPANCY IS FOUND BETWEEN THE VARIOUS ELEMENTS OF THE WORKING DRAWINGS AND THE TRUE NORTH ORIENTATION AS DEPICTED ON THE CIVIL SURVEY. THE CONTRACTOR SHALL ASSUME SOLE LIABILITY FOR ANY FAILURE TO NOTIFY THE ARCHITECT / ENGINEER.

7. THE BUILDING DEPARTMENT ISSUING THE PERMITS SHALL BE NOTIFIED AT LEAST TWO WORKING DAYS PRIOR TO THE COMMENCEMENT OF WORK, OR AS OTHERWISE STIPULATED BY THE CODE ENFORCEMENT OFFICIAL HAVING JURISDICTION.

8. DO NOT EXCAVATE OR DISTURB BEYOND THE PROPERTY LINES OR LEASE LINES, UNLESS OTHERWISE NOTED.

9. ALL EXISTING UTILITIES, FACILITIES, CONDITIONS, AND THEIR DIMENSIONS SHOWN ON THE PLAN HAVE BEEN PLOTTED FROM AVAILABLE RECORDS. THE ARCHITECT / ENGINEER AND THE OWNER ASSUME NO RESPONSIBILITY WHATSOEVER AS TO THE SUFFICIENCY OR THE ACCURACY OF THE INFORMATION SHOWN ON THE PLANS, OR THE MANNER OF THEIR REMOVAL OR ADJUSTMENT. CONTRACTORS SHALL BE RESPONSIBLE FOR DETERMINING EXACT LOCATION OF ALL EXISTING UTILITIES AND FACILITIES PRIOR TO START OF CONSTRUCTION. CONTRACTORS SHALL ALSO OBTAIN FROM EACH UTILITY COMPANY DETAILED INFORMATION RELATIVE TO WORKING SCHEDULES AND METHODS OF REMOVING OR ADJUSTING EXISTING UTILITIES.

10. CONTRACTOR SHALL VERIFY ALL EXISTING UTILITIES, BOTH HORIZONTAL AND VERTICALLY, PRIOR TO THE START OF CONSTRUCTION. ANY DISCREPANCIES OR DOUBTS AS TO THE INTERPRETATION OF PLANS SHOULD BE IMMEDIATELY REPORTED TO THE ARCHITECT / ENGINEER FOR RESOLUTION AND INSTRUCTION, AND NO FURTHER WORK SHALL BE PERFORMED UNTIL THE DISCREPANCY IS CHECKED AND CORRECTED BY THE ARCHITECT / ENGINEER. FAILURE TO SECURE SUCH INSTRUCTION MEANS CONTRACTOR WILL HAVE WORKED AT HIS/HER OWN RISK AND EXPENSE.

11. ALL NEW AND EXISTING UTILITY STRUCTURES ON SITE AND IN AREAS TO BE DISTURBED BY CONSTRUCTION SHALL BE ADJUSTED TO FINISH ELEVATIONS PRIOR TO FINAL INSPECTION OF WORK.

12. ANY DRAIN AND/OR FIELD TILE ENCOUNTERED / DISTURBED DURING CONSTRUCTION SHALL BE RETURNED TO IT'S ORIGINAL CONDITION PRIOR TO COMPLETION OF WORK. SIZE, LOCATION AND TYPE OF ANY UNDERGROUND UTILITIES OR IMPROVEMENTS SHALL BE ACCURATELY NOTED AND PLACED ON "AS-BUILT" DRAWINGS BY GENERAL CONTRACTOR, AND ISSUED TO THE ARCHITECT / ENGINEER AT COMPLETION OF PROJECT.

13. ALL TEMPORARY EXCAVATIONS FOR THE INSTALLATION OF FOUNDATIONS, UTILITIES, ETC., SHALL BE PROPERLY LAID BACK OR BRACED IN ACCORDANCE WITH CORRECT OCCUPATIONAL SAFETY AND HEALTH ADMINISTRATION (OSHA) REQUIREMENTS.

14. INCLUDE MISC. ITEMS PER AT&T SPECIFICATIONS

APPLICABLE CODES, REGULATIONS AND STANDARDS:

SUBCONTRACTOR'S WORK SHALL COMPLY WITH ALL APPLICABLE NATIONAL, STATE, AND LOCAL CODES AS ADOPTED BY THE LOCAL AUTHORITY HAVING JURISDICTION (AHJ) FOR THE LOCATION.

THE EDITION OF THE AHJ ADOPTED CODES AND STANDARDS IN EFFECT ON THE DATE OF CONTRACT AWARD SHALL GOVERN THE DESIGN.

SUBCONTRACTOR'S WORK SHALL COMPLY WITH THE LATEST EDITION OF THE FOLLOWING STANDARDS:

- AMERICAN CONCRETE INSTITUTE (ACI) 318, BUILDING CODE REQUIREMENTS FOR STRUCTURAL CONCRETE
- AMERICAN INSTITUTE OF STEEL CONSTRUCTION (AISC), MANUAL OF STEEL CONSTRUCTION, ASD, NINTH EDITION
- TELECOMMUNICATIONS INDUSTRY ASSOCIATION (TIA) 222-G, STRUCTURAL STANDARD FOR STRUCTURAL ANTENNA TOWER AND ANTENNA SUPPORTING STRUCTURES
- INSTITUTE FOR ELECTRICAL AND ELECTRONICS ENGINEERS (IEEE) 81, GUIDE FOR MEASURING EARTH RESISTIVITY, GROUND IMPEDANCE, AND EARTH SURFACE POTENTIALS OF A GROUND SYSTEM IEEE 1100 (1999) RECOMMENDED PRACTICE FOR POWERING AND GROUNDING OF ELECTRICAL EQUIPMENT.
- IEEE C62.41, RECOMMENDED PRACTICES ON SURGE VOLTAGES IN LOW VOLTAGE AC POWER CIRCUITS (FOR LOCATION CATEGORY "C3" AND "HIGH SYSTEM EXPOSURE")

TIA 607 COMMERCIAL BUILDING GROUNDING AND BONDING REQUIREMENTS FOR TELECOMMUNICATIONS TELCORDIA GR-63 NETWORK EQUIPMENT-BUILDING SYSTEM (NEBS): PHYSICAL PROTECTION
TELCORDIA GR-347 CENTRAL OFFICE POWER WIRING
TELCORDIA GR-1275 GENERAL INSTALLATION REQUIREMENTS
TELCORDIA GR-1503 COAXIAL CABLE CONNECTIONS

ANY AND ALL OTHER LOCAL & STATE LAWS AND REGULATIONS

FOR ANY CONFLICTS BETWEEN SECTIONS OF LISTED CODES AND STANDARDS REGARDING MATERIAL, METHODS OF CONSTRUCTION, OR OTHER REQUIREMENTS, THE MOST RESTRICTIVE SHALL GOVERN. WHERE THERE IS CONFLICT BETWEEN A GENERAL REQUIREMENT AND A SPECIFIC REQUIREMENT, THE SPECIFIC REQUIREMENT SHALL GOVERN.

ABBREVIATIONS

A.B.	ANCHOR BOLT
ABV.	ABOVE
ACCA	ANTENNA CABLE COVER ASSEMBLY
ADD'L	ADDITIONAL
A.F.F.	ABOVE FINISHED FLOOR
A.F.G.	ABOVE FINISHED GRADE
ALUM.	ALUMINUM
ALT.	ALTERNATE
ANT.	ANTENNA
APPRX.	APPROXIMATE(LY)
ARCH.	ARCHITECT(URAL)
AWG.	AMERICAN WIRE GAUGE
BLDG.	BUILDING
BLK.	BLOCK
BLKG.	BLOCKING
BM.	BEAM
B.N.	BOUNDARY NAILING
BTCW.	BARE TINNED COPPER WIRE
B.O.F.	BOTTOM OF FOOTING
B/U	BACK-UP CABINET
CAB.	CABINET
CANT.	CANTILEVER(ED)
C.I.P.	CAST IN PLACE
CLG.	CEILING
CLR.	CLEAR
COL.	COLUMN
CONC.	CONCRETE
CONN.	CONNECTION(OR)
CONST.	CONSTRUCTION
CONT.	CONTINUOUS
d	PENNY (NAILS)
DBL.	DOUBLE
DEPT.	DEPARTMENT
D.F.	DOUGLAS FIR
DIA.	DIAMETER
DIAG.	DIAGONAL
DIM.	DIMENSION
DWG.	DRAWING(S)
DWL.	DOWEL(S)
EA.	EACH
EL.	ELEVATION
ELEC.	ELECTRICAL
ELEV.	ELEVATOR
EMT.	ELECTRICAL METALLIC TUBING
E.N.	EDGE NAIL
ENG.	ENGINEER
EQ.	EQUAL
EXP.	EXPANSION
EXST.(E)	EXISTING
EXT.	EXTERIOR
(F)	FUTURE
FAB.	FABRICATION(OR)
F.F.	FINISH FLOOR
F.G.	FINISH GRADE
FIN.	FINISH(ED)
FLR.	FLOOR
FDN.	FOUNDATION
F.O.C.	FACE OF CONCRETE
F.O.M.	FACE OF MASONRY
F.O.S.	FACE OF STUD
F.O.W.	FACE OF WALL
F.S.	FINISH SURFACE
FT.(')	FOOT (FEET)
FTG.	FOOTING
G.	GROWTH (CABINET)
GA.	GAUGE
GI.	GALVANIZE(D)
G.F.I.	GROUND FAULT CIRCUIT INTERRUPTER
GLB. (GLU-LAM)	GLUE LAMINATED BEAM
GPS	GLOBAL POSITIONING SYSTEM
GRND.	GROUND
HDR.	HEADER
HGR.	HANGER
HT.	HEIGHT
ICGB.	ISOLATED COPPER GROUND BUS
IN. (")	INCH(ES)
INT.	INTERIOR
LB.(#)	POUND(S)
L.B.	LAG BOLTS
L.F.	LINEAR FEET (FOOT)
L.	LONG(ITUDINAL)
MAS.	MASONRY
MAX.	MAXIMUM
M.B.	MACHINE BOLT
MECH.	MECHANICAL
MFR.	MANUFACTURER
MIN.	MINIMUM
MISC.	MISCELLANEOUS
MTL.	METAL
(N)	NEW
NO.(#)	NUMBER
N.T.S.	NOT TO SCALE
O.C.	ON CENTER
OPNG.	OPENING
(P)	PROPOSED
P/C	PRECAST CONCRETE
PCS	PERSONAL COMMUNICATION SERVICES
PLY.	PLYWOOD
PPC	POWER PROTECTION CABINET
PRC	PRIMARY RADIO CABINET
P.S.F.	POUNDS PER SQUARE FOOT
P.S.I.	POUNDS PER SQUARE INCH
P.T.	PRESSURE TREATED
PWR.	POWER (CABINET)
QTY.	QUANTITY
RAD.(R)	RADIUS
REF.	REFERENCE
REINF.	REINFORCEMENT(ING)
REQ'D/	REQUIRED
RGS.	RIGID GALVANIZED STEEL
SCH.	SCHEDULE
SHT.	SHEET
SIM.	SIMILAR
SPEC.	SPECIFICATIONS
SQ.	SQUARE
S.S.	STAINLESS STEEL
STD.	STANDARD
STL.	STEEL
STRUC.	STRUCTURAL
TEMP.	TEMPORARY
THK.	THICK(NESS)
T.N.	TOE NAIL
T.O.A.	TOP OF ANTENNA
T.O.C.	TOP OF CURB
T.O.F.	TOP OF FOUNDATION
T.O.P.	TOP OF PLATE (PARAPET)
T.O.S.	TOP OF STEEL
T.O.W.	TOP OF WALL
TYP.	TYPICAL
U.G.	UNDER GROUND
U.L.	UNDERWRITERS LABORATORY
U.N.O.	UNLESS NOTED OTHERWISE
V.I.F.	VERIFY IN FIELD
W	WIDE (WIDTH)
w/	WITH
WD.	WOOD
W.P.	WEATHERPROOF
WT.	WEIGHT
C	CENTERLINE
P	PLATE, PROPERTY LINE

SYMBOLS LEGEND

1 A-300 / 1 A-300	BLDG. SECTION ROAD SECTION
A5 A-310	WALL SECTION
D5 A-500	DETAIL
C1 A-113, A4 A-113, C4 A-113, A1 A-113	ELEVATION
001	DOOR SYMBOL
10	WINDOW SYMBOL
3	TILT-UP PANEL MARK
	PROPERTY LINE
	CENTERLINE
±0"	ELEVATION DATUM
A	GRID/COLUMN LINE
3	KEYNOTE, DIMENSION ITEM
2	KEYNOTE, CONSTRUCTION ITEM
W- 3	WALL TYPE MARK
OFFICE 101	ROOM NAME ROOM NUMBER
	GROUT OR PLASTER
	(E) BRICK
	(E) MASONRY
	CONCRETE
	EARTH
	GRAVEL
	PLYWOOD
	SAND
	PLYWOOD
	SAND
	(E) STEEL
	MATCH LINE
	GROUND CONDUCTOR
OH	OVERHEAD SERVICE CONDUCTORS
TELCO	TELEPHONE CONDUIT
POWER	POWER CONDUIT
P/T	POWER/TELCO CONDUIT
COAX	COAXIAL CABLE
HYBRID	HYBRID CABLE
	CHAIN LINK FENCE
	WOOD FENCE
	EXISTING FLOW LINE
	NEW FLOW LINE
	FIBER ROLL
	SILT FENCE
	(P) ANTENNA
	(P) RRU
	(P) DC SURGE SUPPRESSION
	(F) ANTENNA
	(F) RRU
	(E) EQUIPMENT

Issued For:

SWEENEY'S CROSSING

7800 STEPHANIE LANE

SOMERSET, CA 95684

PREPARED FOR

at&t

2600 Camino Ramon, 4W850 N
San Ramon, California 94583

EPIC WIRELESS GROUP

AT&T SITE NO:	CVL03434
PROJECT NO:	13787575
DRAWN BY:	CES
CHECKED BY:	CES

REV	DATE	DESCRIPTION
0	03/29/17	ZD 90%
0	05/08/17	ZD 100%
1	05/31/17	ZD 100% EASEMENT CHANGE

Licensor:

REGISTERED PROFESSIONAL ENGINEER CRAIG M. HORNER No. 84674 CIVIL STATE OF CALIFORNIA

IT IS A VIOLATION OF LAW FOR ANY PERSON, UNLESS THEY ARE ACTING UNDER THE DIRECTION OF A LICENSED PROFESSIONAL ENGINEER, TO ALTER THIS DOCUMENT.

Engineer:

ADAPTIVE RE-USE ENGINEERING
Craig Horner, PE 84674
214-407-3184
3112 LEATHA WAY
SACRAMENTO, CA 95821
craigmhorner@yahoo.com

SHEET TITLE:

GENERAL NOTES

SHEET NUMBER:

GN-1

BEST MANAGEMENT PRACTICES "BMP" TABLE

BEST MANAGEMENT PRACTICES	LOCATION	SCHEDULE IMPLEMENTATION	MAINTENANCE SCHEDULE
PRESERVING EXISTING VEGETATION	AROUND PERIMETER OF PROJECT SITE	CONTINUOUS UNTIL CONSTRUCTION IS COMPLETED	EDUCATE EMPLOYEES AND SUBCONTRACTORS REGARDING IMPORTANCE OF MAINTAINING EXISTING VEGETATION TO PREVENT EROSION AND FILTER OUT SEDIMENT IN RUNOFF FROM DISTURBED AREAS ON THE CONSTRUCTION SITE. INSPECT SITE PERIMETER MONTHLY TO VERIFY THE OUTSIDE VEGETATION IS NOT DISTURBED.
PROTECT GRADED AREAS AND SLOPES FROM WASHOUT AND EROSION	THROUGHOUT PROJECT SITE	CONTINUOUS	INSPECT GRADED AREAS AND SLOPES ON AT LEAST A MONTHLY BASIS TO CHECK FOR EROSION. THE GRADE TRIBUTARY AREAS OR INSTALL SAND DIKES AS NECESSARY TO PREVENT EROSION.
GRAVEL FILTER	ALONG FLOW LINES OF UNPAVED ROADWAYS WITHIN SITE	IN PLACE CONTINUOUSLY UNTIL ROADWAYS ARE PAVED	INSPECT AFTER EACH STORM. REMOVE ONSITE SEDIMENT DEPOSITED BEHIND BERM OR BARRIER TO MAINTAIN EFFECTIVENESS.
BAG INLET FILTER	INLETS TO THE STORM DRAINAGE SYSTEM	CONTINUOUS UNTIL LANDSCAPING IS IN PLACE	INSPECT WEEKLY AND AFTER EACH STORM. REMOVE SEDIMENT AND DEBRIS BEFORE ACCUMULATION HAVE REACHED ONE THIRD THE DEPTH OF THE BAG. REPAIR OR REPLACE INLET FILTER BAG AS SOON AS DAMAGE OCCURS.
FIBER ROLLS	SEE NOTE 3 OF EROSION & CONTROL NOTES	CONTINUOUS	INSPECT AFTER EACH STORM. REMOVE SEDIMENT DEPOSITED BEHIND FIBER ROLLS WHENEVER NECESSARY TO MAINTAIN EFFECTIVENESS.
HYDROSEEDING	3:1 SLOPES	IN PLACE DURING BY SEPT. 15	INSPECT SLOPES ON AT LEAST A MONTHLY BASIS TO CHECK FOR EROSION. IF EROSION IS NOTED, SPREAD STRAW MULCH OVER AFFECTED AREAS.
STABILIZED CONSTRUCTION ENTRANCE	ENTRANCES TO SITE FROM PUBLIC ROADWAYS	CONTINUOUS, UNTIL ENTRANCES AND ONSITE ROADWAYS ARE PAVED	INSPECT ON A MONTHLY BASIS AND AFTER EACH RAINFALL. ADD AGGREGATE BASE MATERIAL WHENEVER NECESSARY TO PREVENT SEDIMENT FROM BEING TRACKED INTO PUBLIC STREET.
WIND EROSION CONTROL PRACTICES	WHEREVER NECESSARY THROUGHOUT PROJECT SITE	CONTINUOUS UNTIL GRADING IS COMPLETED AND SOILS HAVE STABILIZED	INSPECT SITE DURING WINDY CONDITIONS TO IDENTIFY AREAS WHERE WIND AND EROSION IS OCCURRING AND ABATE EROSION AS NECESSARY.
GOOD HOUSEKEEPING MEASURES	THROUGHOUT PROJECT SITE	CONTINUOUS UNTIL CONSTRUCTION IS COMPLETED	INSPECT SITE ON AT LEAST A MONTHLY BASIS TO VERIFY GOOD HOUSEKEEPING PRACTICES ARE BEING IMPLEMENTED.
PROPER CONSTRUCTION MATERIAL STORAGE	DESIGNATED AREA	CONTINUOUS UNTIL CONSTRUCTION IS COMPLETED	INSPECT SITE ON AT LEAST A WEEKLY BASIS TO VERIFY THAT CONSTRUCTION MATERIALS ARE STORED IN A MANNER WHICH COULD NOT CAUSE STORM WATER POLLUTION.
PROPER CONSTRUCTION WASTE STORAGE AND DISPOSAL INCLUDING	DESIGNATED COLLECTION AREA AND CONTAINERS	CONTINUOUS UNTIL CONSTRUCTION IS COMPLETED	INSPECT SITE ON AT LEAST A WEEKLY BASIS TO ASSURE WASTE IS STORED PROPERLY AND DISPOSED OF AT LEGAL DISPOSAL SITE, DAILY.
CONCRETE SPILL CLEANUP PAINT & PAINTING SUPPLIES	MATERIAL HANDLING AREAS	IMMEDIATELY AT TIME OF SPILL	INSPECT MATERIAL HANDLING AREAS ON AT LEAST A MONTHLY BASIS TO VERIFY PROPER SPILL CLEANUP.
VEHICLE FUELING, MAINTENANCE & CLEANING	DESIGNATED AREA WITH SECONDARY CONTAINMENT	CONTINUOUS	KEEP AMPLE SUPPLIES OF SPILL CLEANUP MATERIALS ON SITE & INSPECT ON REGULAR SCHEDULE.
STREET AND STORM DRAINAGE FACILITY MAINTENANCE DEFINITIONS	STREETS AND STORM DRAINAGE FACILITIES	CONTINUOUS UNTIL CONSTRUCTION IS COMPLETED	MAINTAIN STORM DRAINAGE FACILITIES AND PAVED STREETS CLEAR OF SEDIMENT AND DEBRIS.

1. WET SEASON: ENTIRE PERIOD BETWEEN OCTOBER 1 THROUGH APRIL 30. CONTRACTOR SHALL ALSO IMPLEMENT WET SEASON MEASURES IF WET WEATHER IS EXPECTED DURING THE DRY SEASON
2. PHASES OF GRADING

INITIAL: WHEN CLEARING AND GRUBBING ACTIVITIES OCCUR.
ROUGH: WHEN CUT AND FILL ACTIVITIES OCCUR AND THE SITE IMPROVEMENTS ARE CONSTRUCTED, INCLUDING UNDERGROUND PIPING, STREETS, SIDEWALKS, AND OTHER IMPROVEMENTS.
WHEN FINAL ELEVATION IS SET, AND SITE IMPROVEMENTS ARE COMPLETED AND READY FOR CITY ACCEPTANCE.

FIBER ROLL NOTES:

1. REPAIR OR REPLACE SPLIT, TORN UNRAVELING OR SLUMPING FIBER ROLLS. FIBER ROLLS TO BE STAKED 4' O.C. PARALLEL TO (E) CONTOURS.
2. INSPECT FIBER ROLLS WHEN RAIN IS FORECAST, DURING AND FOLLOWING RAIN EVENTS, AT LEAST DAILY DURING PROLONGED RAINFALL, FOR SPECIFIC MONITORING INTERVALS REFER TO THE CURRENT VERSION OF STORM WATER "BMP" MANUAL FOR DURING THE NON-RAINY SEASON.
3. SEDIMENT SHOULD BE REMOVED WHEN SEDIMENT ACCUMULATION REACHES ONE-HALF THE DESIGNATED SEDIMENT STORAGE DEPTH, USUALLY ONE-HALF THE DISTANCE BETWEEN THE TOP OF THE FIBER ROLL AND THE ADJACENT GROUND SURFACE. SEDIMENT REMOVED DURING MAINTENANCE MAY BE INCORPORATED INTO THE EARTHWORK ON THE SITE OR DISPOSED AT AN APPROPRIATE LOCATION.
4. FILTER BARRIER SHALL BE CONSTRUCTED LONG ENOUGH TO EXTEND ACROSS THE EXPECTED FLOW PATH AND AS APPROVED BY THE LANDSCAPE INSPECTOR.

CONSTRUCTION EROSION/SEDIMENTATION CONTROL PLAN NOTES:

1. THE CONTRACTOR SHALL FOLLOW TYPICAL GUIDELINES FOR GRADING, EROSION AND SEDIMENT CONTROL FOR THE MEASURES SHOWN OR STATED ON THESE PLANS.
2. CONTRACTOR MUST ENSURE THAT THE CONSTRUCTION SITE IS PREPARED PRIOR TO THE ONSET OF ANY STORM. CONTRACTOR SHALL HAVE ALL EROSION AND SEDIMENT CONTROL MEASURES IN PLACE FOR THE WINTER MONTHS PRIOR TO OCTOBER 1.
3. ALL EROSION AND SEDIMENT CONTROL MEASURES SHALL BE MAINTAINED UNTIL DISTURBED AREAS ARE STABILIZED. CHANGES TO THIS EROSION AND SEDIMENT CONTROL PLAN SHALL BE MADE TO MEET FIELD CONDITIONS ONLY WITH THE APPROVAL OF OR AT THE DIRECTION OF A REPRESENTATIVE OF THE DEPARTMENT OF UTILITIES.
4. THIS PLAN MAY NOT COVER ALL THE SITUATIONS THAT ARISE DURING CONSTRUCTION DUE TO UNANTICIPATED FIELD CONDITIONS. VARIATIONS MAY BE MADE TO THE PLAN IN THE FIELD SUBJECT TO THE APPROVAL OF OR AT THE DIRECTION OF A REPRESENTATIVE OF THE DEPARTMENT OF UTILITIES.
5. ALL EROSION AND SEDIMENT CONTROL MEASURES SHALL BE CHECKED BEFORE DURING AND AFTER ALL STORMS TO ENSURE MEASURES ARE FUNCTIONING PROPERLY. REFER TO CURRENT VERSION OF STORMWATER "BMP" MANUAL FOR SPECIFIC SCHEDULE PER SITE CONDITIONS.
6. CONTRACTOR SHALL MAINTAIN A LOG AT THE SITE OF ALL INSPECTIONS OR MAINTENANCE OF BMPS, AS WELL AS, ANY CORRECTIVE CHANGES TO THE BMPS OR EROSION AND SEDIMENT CONTROL PLAN.
7. IN AREAS WHERE SOIL IS EXPOSED, PROMPT REPLANTING WITH NATIVE COMPATIBLE, DROUGHT-RESISTANT VEGETATION SHALL BE PERFORMED. NO AREAS WILL BE LEFT EXPOSED OVER THE WINTER SEASON.
8. THE CONTRACTOR SHALL INSTALL A STABILIZED CONSTRUCTION ENTRANCE PRIOR TO COMMENCEMENT OF CONSTRUCTION WHEN APPLICABLE FOR SITES NOT ACCESSIBLE BY COMMERCIALLY PREPARED ACCESSES. LOCATION OF THE ENTRANCE MAY BE ADJUSTED BY THE CONTRACTOR TO FACILITATE CONSTRUCTION OPERATIONS. ALL CONSTRUCTION TRAFFIC ENTERING THE PAVED ROAD MUST CROSS THE STABILIZED CONSTRUCTION ENTRANCE. THE STABILIZED CONSTRUCTION ENTRANCE (WHEN APPLICABLE) SHALL REMAIN IN PLACE UNTIL THE CONSTRUCTION IS COMPLETE.
9. ALL SEDIMENT DEPOSITED ON PAVED ROADWAYS SHALL BE SWEPT AT THE END OF EACH WORKING DAY OR AS NECESSARY.
10. CONTRACTOR SHALL PLACE GRAVEL BAGS AROUND ALL NEW DRAINAGE STRUCTURE OPENINGS IMMEDIATELY AFTER THE STRUCTURE OPENING IS CONSTRUCTED. THESE GRAVEL BAGS SHALL BE MAINTAINED AND REMAIN IN PLACE UNTIL CONSTRUCTION IS COMPLETED.
11. THE ENTRANCE SHALL BE MAINTAINED IN A CONDITION THAT WILL PREVENT TRACKING OR FLOWING OF SEDIMENT ONTO PUBLIC RIGHT-OF-WAYS. THIS MAY REQUIRE TOP DRESSING, REPAIR AND/OR CLEANOUT OF ANY MEASURES USED TO TRAP SEDIMENT.
12. WHEN NECESSARY, WHEELS SHALL BE CLEANED PRIOR TO ENTRANCE ONTO PUBLIC RIGHT-OF-WAY.
13. WHEN WASHING IS REQUIRED, IT SHALL BE DONE ON AN AREA STABILIZED WITH CRUSHED STONE THAT DRAINS INTO AN APPROVED SEDIMENT TRAP OR SEDIMENT BASIN.
14. CONTRACTOR SHALL IMPLEMENT HOUSEKEEPING PRACTICES AS FOLLOWS:

A. SOLID WASTE MANAGEMENT:
PROVIDE DESIGNATED WASTE COLLECTION AREAS AND CONTAINERS. ARRANGE FOR REGULAR REMOVAL AND DISPOSAL. CLEAR SITE OF TRASH INCLUDING ORGANIC DEBRIS, PACKAGING MATERIALS, SCRAP OR SURPLUS BUILDING MATERIALS AND DOMESTIC WASTE DAILY.

B. MATERIAL DELIVERY AND STORAGE:
PROVIDE A DESIGNATED MATERIAL STORAGE AREA WITH SECONDARY CONTAINMENT SUCH AS BERMING. STORE MATERIAL ON PALLETS AND PROVIDE COVERING FOR SOLUBLE MATERIALS. RELOCATE STORAGE AREA INTO BUILDING SHELL WHEN POSSIBLE. INSPECT AREA DAILY

C. CONCRETE WASTE:
PROVIDE A DESIGNATED AREA FOR A TEMPORARY PIT TO BE USED FOR CONCRETE TRUCK WASH-OUT. DISPOSE OF HARDENED CONCRETE OFFSITE. AT NO TIME SHALL A CONCRETE TRUCK DUMP ITS WASTE AND CLEAN ITS TRUCK INTO THE CITY STORM DRAINS VIA CURB AND GUTTER. INSPECT DAILY TO CONTROL RUNOFF, AND WEEKLY FOR REMOVAL OF HARDENED CONCRETE.

D. PAINT AND PAINTING SUPPLIES:
PROVIDE INSTRUCTION TO EMPLOYEES AND SUBCONTRACTORS REGARDING REDUCTION OF POLLUTANTS INCLUDING MATERIAL STORAGE, USE, AND CLEAN UP. INSPECT SITE DAILY FOR EVIDENCE OF IMPROPER DISPOSAL.

E. VEHICLE FUELING, MAINTENANCE AND CLEANING:
PROVIDE A DESIGNATED FUELING AREA WITH SECONDARY CONTAINMENT SUCH AS BERMING. DO NOT ALLOW MOBILE FUELING OF EQUIPMENT. PROVIDE EQUIPMENT WITH DRIP PANS. RESTRICT ONSITE MAINTENANCE AND CLEANING OF EQUIPMENT TO A MINIMUM. INSPECT AREA DAILY.

F. HAZARDOUS WASTE MANAGEMENT:
PREVENT THE DISCHARGE OF POLLUTANTS FROM HAZARDOUS WASTES TO THE DRAINAGE SYSTEM THROUGH PROPER MATERIAL USE, WASTE DISPOSAL AND TRAINING OF EMPLOYEES. HAZARDOUS WASTE PRODUCTS COMMONLY FOUND ON-SITE INCLUDE BUT ARE NOT LIMITED TO PAINTS & SOLVENTS, PETROLEUM PRODUCTS, FERTILIZERS, HERBICIDES & PESTICIDES, SOIL STABILIZATION PRODUCTS, ASPHALT PRODUCTS AND CONCRETE CURING PRODUCTS.

15. USE "BMP'S" AT ALL PHASES OF CONSTRUCTION.
16. GRAVEL BAGS WITH FIBER ROLLS/ SILT BARRIER AND OR BAG INLET FILTERS TO BE USED FOR INLET PROTECTION FROM CONSTRUCTION CONTAMINATES. CONTRACTOR TO FIELD IDENTIFY ALL CONDITIONS WHERE THIS MAY APPLY AND MAINTAIN DURING THE COURSE OF CONSTRUCTION. THIS SHALL APPLY TO THE LOCAL SITE ACTIVITY AS WELL AS ANY AREA TRAVELED EXTENDING TO THE POINT OF SITE ACCESS AND ONTO THE PUBLIC RIGHT OF WAYS. NO CONSTRUCTION DEBRIS MAY ENTER ANY STORM WATER DRAIN AT ANY TIME. THE CONTRACTOR SHALL IMPLEMENT MEASURES TO MONITOR THIS AT ALL TIMES DURING THE CONSTRUCTION PHASE.
17. ANY AN ALL STORED MATERIALS, INCLUDING BUT NOT LIMITED TO, EXCAVATED SOIL, IMPORTED ROCK, SAND OR GRAVEL, PAINT, CONCRETE, WOOD, METAL, OR CONTAMINATED WATER SHALL BE STORED PROPERLY TO INSURE NO DISCHARGE OF CONTAMINATES.
18. REMOVE DIRT, DEBRIS AND WEEDS FROM PUBLIC SIDE WALK AREAS AND STORM DRAIN SYSTEMS AND ANY CONSTRUCTION MATERIALS OR DEBRIS TO AN APPROVED LOCATION AS ON A DAILY BASIS (OR AS DIRECTED BY THE CITY ENGINEER). A CONCRETE WASHOUT SHALL BE ONSITE AT ALL TIMES. CONTRACTOR TO FIELD VERIFY LOCATION, AND BEST METHOD TO PREVENT SPILLS AND DISCHARGE OF CONCRETE/ WATER CONTAMINANTS.
19. CONTRACTOR TO FIELD IDENTIFY "BMP"S (BEST MANAGEMENT PRACTICES) PER SITE CONDITIONS. AND REFER TO CURRENT VERSION OF STORMWATER "BMP" MANUAL FOR SPECIFIC SCHEDULES OR DETAILS NOT SPECIFIED IN THIS PLAN.

STORM WATER QUALITY NOTES:

1. CONTRACTOR SHALL PROVIDE DRAIN INLET PROTECTION FOR ALL CATCH BASINS LOCATED IN THE VICINITY OF WORK. THIS INCLUDES ANY CATCH BASINS IN THE PUBLIC RIGHT-OF-WAY, AS WELL AS ANY ON-SITE CATCH BASINS ON PRIVATE PROPERTY.
2. CONTRACTOR SHALL INSTALL A STABILIZED CONSTRUCTION ENTRANCE/EGRESS FROM PROJECT SITE TO PREVENT TRACK-OUT OF SEDIMENT ONTO THE PUBLIC RIGHT-OF WAY FROM CONSTRUCTION VEHICLES.
3. CONTRACTOR SHALL ENSURE THAT CONSTRUCTION ACTIVITIES DO NOT DEPOSIT SEDIMENT ONTO THE PUBLIC ROADWAY, SIDEWALKS AND GUTTERS. ALL SEDIMENT AND CONSTRUCTION DEBRIS MUST BE REMOVED BY THE END OF EACH WORKING DAY.
4. CONTRACTOR SHALL USE STREET SWEEPING OR OTHER DRY SWEEPING METHOD, AS NECESSARY, TO REMOVE CONSTRUCTION OR DEMOLITION-RELATED SEDIMENT FROM PUBLIC SIDEWALKS, GUTTERS AND ROADWAY.
5. CONTRACTOR SHALL SCHEDULE WORK FOR DRY-WEATHER DAYS WHEN NO RAIN IS IN THE IMMEDIATE FORECAST.
6. CONTRACTOR SHALL INSTALL AN APPROVED WASH-OUT STRUCTURE AT THE CONSTRUCTION SITE. ALL CONCRETE, PAINT, STUCCO AND OTHER LIQUIDS WILL BE WASHED OUT IN THIS AREA.
7. CONTRACTOR SHALL PROVIDE DUST CONTROL TO PREVENT THE NUISANCE OF BLOWING DUST WITHOUT CAUSING SEDIMENT, DEBRIS, OR LITTER TO ENTER THE ANY STORM DRAIN SYSTEM.
8. CONTRACTOR SHALL INSTALL ANY OTHER BMPS AS NECESSARY TO CONTROL THE DISCHARGE OF POLLUTANTS FROM THE PROJECT SITE.
9. THE CONTRACTOR SHALL BE RESPONSIBLE FOR IMPLEMENTATION AND ADHERENCE TO THE LOCAL REQUIREMENTS.

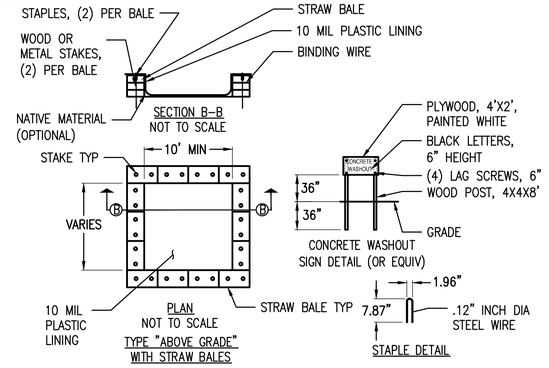

NOTES:
1. ACTUAL LAYOUT DETERMINED IN THE FIELD.
2. THE CONCRETE WASHOUT SIGN SHALL BE INSTALLED WITHIN 32' OF THE TEMPORARY CONCRETE WASHOUT FACILITY.

1 CONCRETE WASHOUT DETAIL
NOT TO SCALE

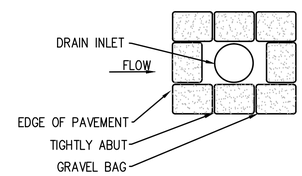

2 DRAIN INLET DETAIL
NOT TO SCALE

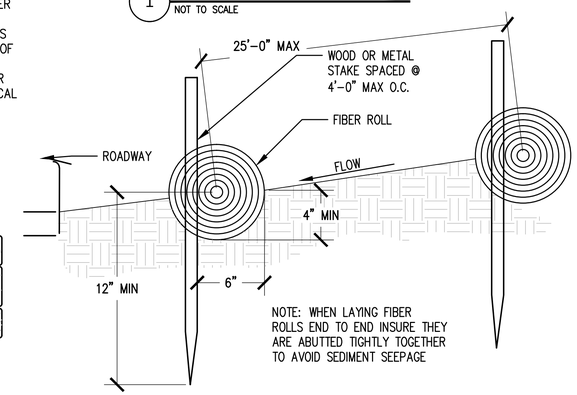

3 FIBER ROLL DETAIL
NOT TO SCALE

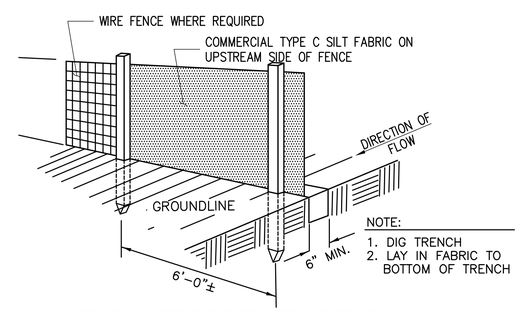

CONSTRUCTION NOTES FOR FABRICATED SILT FENCE

1. WOVEN WIRE FENCE TO BE FASTENED SECURELY TO FENCE POSTS WITH WIRE TIES OR STAPLES.
2. FILTER CLOTH TO BE FASTENED SECURELY TO WOVEN WIRE FENCE WITH TIES SPACED EVERY 24" AT TOP AND MID SECTION.
3. WHEN TWO SECTIONS OF FILTER CLOTH ADJOIN EACH OTHER THEY SHALL BE OVER-LAPPED BY SIX INCHES AND FOLDED.
4. MAINTENANCE SHALL BE PERFORMED AS NEEDED AND MATERIAL REMOVED WHEN "BULDGES" DEVELOP IN THE SILT FENCE.

POSTS: STEEL EITHER T OR U TYPE OR 4" HARDWOOD. MINIMUM LENGTH – 5 FEET

FENCE: WOVEN WIRE, 14 GA. 6" MAX. MESH OPENING. AS DIRECTED BY MARYLAND DCR

FILTER CLOTH: FILTER X, MIRAFI 100X' STABILINKA T140N OR APPROVED EQUAL.

PREFABRICATED UNIT: GEOFAB, ENVIROFENCE OR APPROVED EQUAL.

4 TYPE C SILT FENCE DETAIL
NOT TO SCALE

Issued For:

SWEENEY'S CROSSING

7800 STEPHANIE LANE

SOMERSET, CA 95684

PREPARED FOR

at&t

2600 Camino Ramon, 4W850 N
San Ramon, California 94583

EPIC WIRELESS GROUP

AT&T SITE NO:	CVL03434
PROJECT NO:	13787575
DRAWN BY:	CES
CHECKED BY:	CES

REV	DATE	DESCRIPTION
0	03/29/17	ZD 90%
0	05/08/17	ZD 100%
1	05/31/17	ZD 100% EASEMENT CHANGE

Licensor:

REGISTERED PROFESSIONAL ENGINEER CRAIG M. HORNER No. 84674 CIVIL STATE OF CALIFORNIA

IT IS A VIOLATION OF LAW FOR ANY PERSON, UNLESS THEY ARE ACTING UNDER THE DIRECTION OF A LICENSED PROFESSIONAL ENGINEER, TO ALTER THIS DOCUMENT.

Engineer:
ADAPTIVE RE-USE ENGINEERING
Craig Horner, PE 84674
214-407-3184
3112 LEATHA WAY
SACRAMENTO, CA 95821
craigmhorner@yahoo.com

SHEET TITLE:
EROSION CONTROL NOTES

SHEET NUMBER:
C-2

LEGEND

(E) EXISTING
(N) PROPOSED
(E) FLOW LINE
(N) FLOW LINE
(N) FIBER ROLL
(N) SILT FENCE

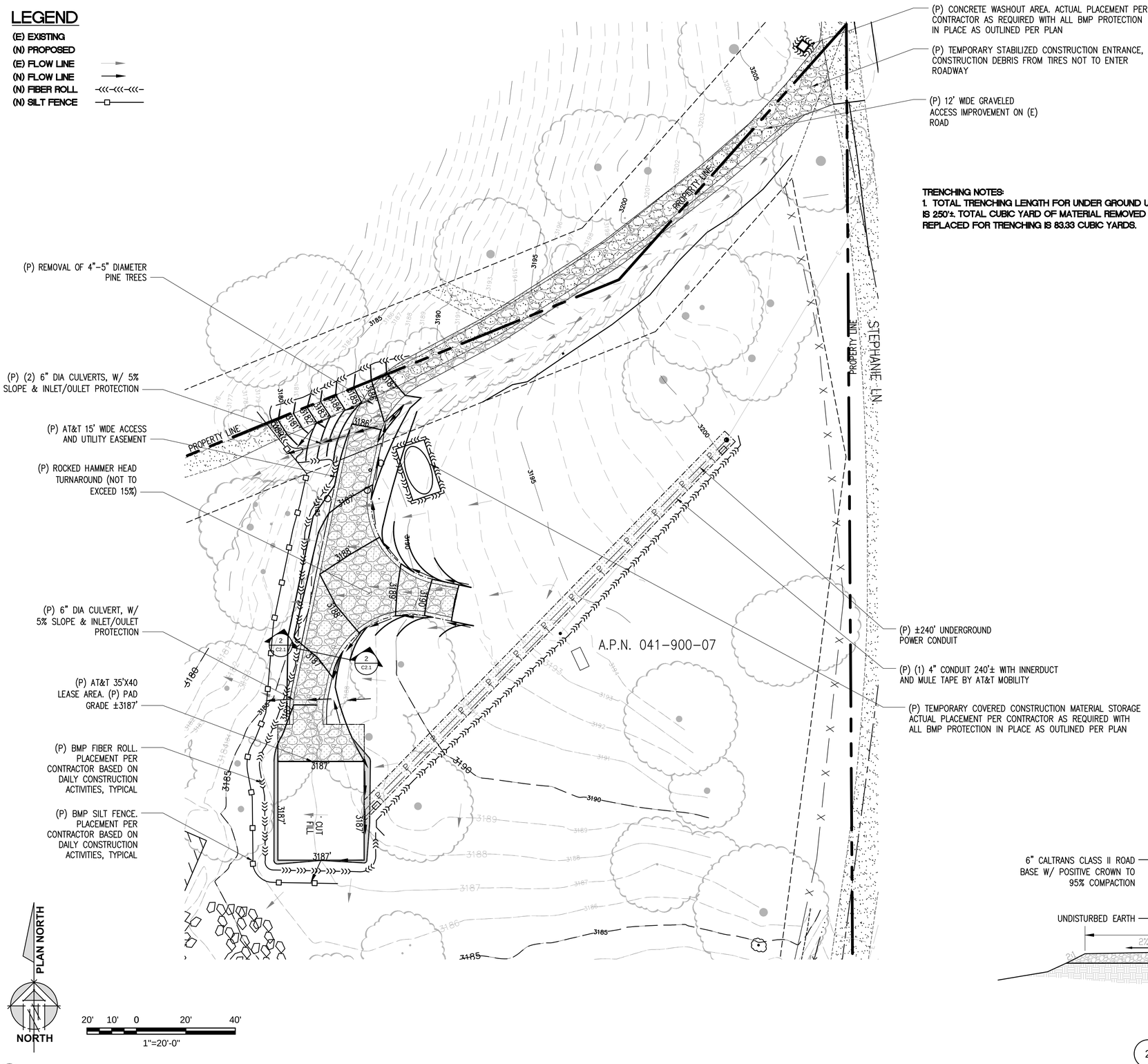

1 GRADING PLAN
1"=20'-0"

SITE TYPE: MONOPINE/SHELTER

TRENCHING NOTES:
1. TOTAL TRENCHING LENGTH FOR UNDER GROUND UTILITIES IS 250'±. TOTAL CUBIC YARD OF MATERIAL REMOVED AND REPLACED FOR TRENCHING IS 83.33 CUBIC YARDS.

CONSTRUCTION EROSION/ SEDIMENTATION CONTROL PLAN NOTES:

1. USE "BMP'S" AT ALL PHASES OF CONSTRUCTION.
2. GRAVEL BAGS WITH FIBER ROLLS AND SILT BARRIER AS NEEDED AND/OR BAG INLET FILTERS TO BE USED FOR INLET PROTECTION FROM CONSTRUCTION CONTAMINATES. CONTRACTOR TO FIELD IDENTIFY ALL CONDITIONS WHERE THIS MAY APPLY AND MAINTAIN DURING THE COURSE OF CONSTRUCTION. THIS SHALL APPLY TO THE LOCAL SITE ACTIVITY AS WELL AS ANY AREA TRAVELED EXTENDING TO THE POINT OF SITE ACCESS AND ONTO THE PUBLIC RIGHT OF WAYS. NO CONSTRUCTION DEBRIS MAY ENTER ANY STORM WATER DRAIN AT ANY TIME. THE CONTRACTOR SHALL IMPLEMENT MEASURES TO MONITOR THIS AT ALL TIMES DURING THE CONSTRUCTION PHASE.
3. ANY AND ALL STORED MATERIALS, INCLUDING BUT NOT LIMITED TO, EXCAVATED SOIL, IMPORTED ROCK, SAND OR GRAVEL, PAINT, CONCRETE, WOOD, METAL OR CONTAMINATED WATER SHALL BE STORED PROPERLY TO INSURE NO DISCHARGE OF CONTAMINATES.
4. REMOVE DIRT, DEBRIS AND WEEDS FROM PUBLIC SIDE WALK AREAS AND STORM DRAIN SYSTEMS AND ANY CONSTRUCTION MATERIALS OR DEBRIS TO AN APPROVED LOCATION AS ON A DAILY BASIS (OR AS DIRECTED BY THE CITY ENGINEER). A CONCRETE, STUCCO WASHOUT SHALL BE ON SITE AT ALL TIMES CONTRACTOR TO FIELD VERIFY LOCATION AND BEST METHOD TO PREVENT SPILLS AND DISCHARGE OF CONCRETE/WATER CONTAMINANTS.
5. CONTRACTOR TO FIELD IDENTIFY "BMP"S (BEST MANAGEMENT PRACTICES) PER SITE CONDITIONS AND REFER TO CURRENT VERSION OF STORM WATER "BMP" MANUAL FOR SPECIFIC SCHEDULES OR DETAILS NOT SPECIFIED IN THIS PLAN.
6. INSTALL SEDIMENT LOGS AROUND CONSTRUCTION AREA TO KEEP DEBRIS ON PROPERTY.
7. PLACE GRAVEL BAGS AROUND NEARBY, DOWN STREAM STORM INLET(S) DURING CONSTRUCTION.
8. REPAIR OR REPLACE SPLIT, TORN UNRAVELING OR SLUMPING FIBER ROLLS. FIBER ROLLS TO BE STAKED 4' O.C. PARALLEL TO (E) CONTOURS.
9. INSPECT FIBER ROLLS WHEN RAIN IS FORECAST, DURING AND FOLLOWING RAIN EVENTS, AT LEAST DAILY DURING PROLONGED RAINFALL. FOR SPECIFIC MONITORING INTERVALS REFER TO THE CURRENT VERSION OF STORM WATER "BMP" MANUAL.
10. SEDIMENT SHOULD BE REMOVED WHEN SEDIMENT ACCUMULATION REACHES ONE-HALF THE DESIGNATED SEDIMENT STORAGE DEPTH, USUALLY ONE-HALF THE DISTANCE BETWEEN THE TOP OF THE FIBER ROLL AND THE ADJACENT GROUND SURFACE. SEDIMENT REMOVED DURING MAINTENANCE MAY BE INCORPORATED INTO THE EARTHWORK ON THE SITE OR DISPOSED AT AN APPROPRIATE LOCATION.
11. FILTER BARRIER SHALL BE CONSTRUCTED LONG ENOUGH TO EXTEND ACROSS THE EXPECTED FLOW PATH AND AS APPROVED BY THE LANDSCAPE INSPECTOR.
12. ON-SITE WATER TRUCK MAY BE REQUIRED FOR DUST MITIGATION.

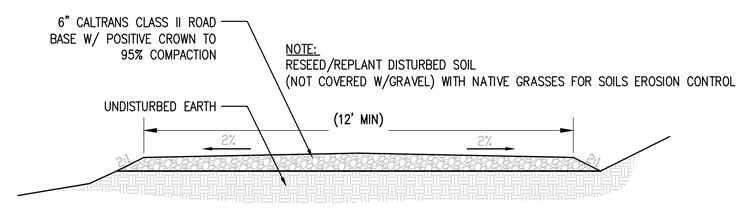

2 ACCESS ROAD DETAIL
NOT TO SCALE

Issued For:

SWEENEY'S CROSSING
7800 STEPHANIE LANE
SOMERSET, CA 95684

PREPARED FOR
at&t
2600 Camino Ramon, 4W850 N
San Ramon, California 94583

EPIC WIRELESS GROUP

AT&T SITE NO:	CVL03434
PROJECT NO:	13787575
DRAWN BY:	CES
CHECKED BY:	CES

REV	DATE	DESCRIPTION
0	03/29/17	ZD 90%
0	05/08/17	ZD 100%
1	05/31/17	ZD 100% EASEMENT CHANGE

Licensor:

REGISTERED PROFESSIONAL ENGINEER
CRAIG M. HORNER
No. 84674
CIVIL
STATE OF CALIFORNIA

IT IS A VIOLATION OF LAW FOR ANY PERSON, UNLESS THEY ARE ACTING UNDER THE DIRECTION OF A LICENSED PROFESSIONAL ENGINEER, TO ALTER THIS DOCUMENT.

Engineer:
ADAPTIVE RE-USE ENGINEERING
Craig Horner, PE 84674
214-407-3184
3112 LEATHA WAY
SACRAMENTO, CA 95821
craigmhorner@yahoo.com

SHEET TITLE:
GRADING PLAN AND DETAILS

SHEET NUMBER:
C-2.1

THIS IS NOT A SITE SURVEY

ALL PROPERTY BOUNDARIES, ORIENTATION OF TRUE NORTH AND STREET HALF-WIDTHS HAVE BEEN OBTAINED FROM A TAX PARCEL MAP AND EXISTING DRAWINGS AND ARE APPROXIMATE.

NOTES:

1. NO GRADING OR PERMANENT CONSTRUCTION SHALL OCCUR WITHIN DRIP LINES OF TREES THAT ARE TO REMAIN WITHOUT ARBORIST APPROVAL.

2. PRIOR TO CONSTRUCTION, GENERAL CONTRACTOR TO CONTACT DIGALERT TO MARK OUT EXISTING UNDERGROUND UTILITIES. IN THE EVENT OF CONFLICTS, CONTRACTOR TO CONTACT PDC.

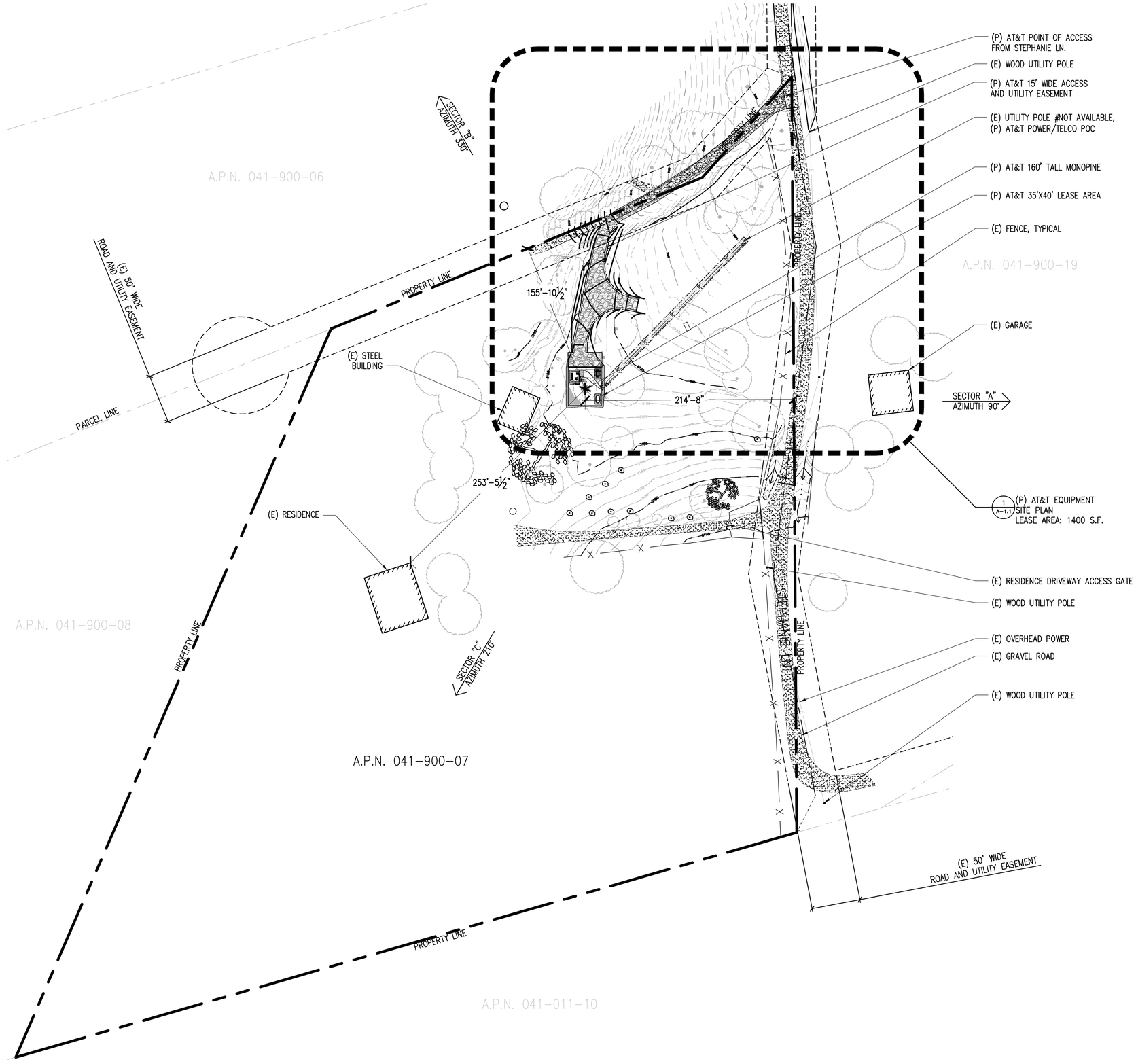

1 OVERALL SITE PLAN
1"=50'-0"

SITE TYPE: MONOPINE/SHELTER

Issued For:

SWEENEY'S CROSSING

7800 STEPHANIE LANE

SOMERSET, CA 95684

PREPARED FOR

at&t

2600 Camino Ramon, 4W850 N
San Ramon, California 94583

EPIC WIRELESS GROUP

AT&T SITE NO:	CVL03434
PROJECT NO:	13787575
DRAWN BY:	CES
CHECKED BY:	CES

REV	DATE	DESCRIPTION
0	03/29/17	ZD 90%
0	05/08/17	ZD 100%
1	05/31/17	ZD 100% EASEMENT CHANGE

Licensor:

REGISTERED PROFESSIONAL ENGINEER
CRAIG M. HORNER
No. 84674
CIVIL
STATE OF CALIFORNIA

IT IS A VIOLATION OF LAW FOR ANY PERSON, UNLESS THEY ARE ACTING UNDER THE DIRECTION OF A LICENSED PROFESSIONAL ENGINEER, TO ALTER THIS DOCUMENT.

Engineer:

ADAPTIVE RE-USE ENGINEERING
Craig Horner, PE 84674
214-407-3184
3112 LEATHA WAY
SACRAMENTO, CA 95821
craigmhorner@yahoo.com

SHEET TITLE:

OVERALL SITE PLAN

SHEET NUMBER:

A-1

THIS IS NOT A SITE SURVEY

ALL PROPERTY BOUNDARIES, ORIENTATION OF TRUE NORTH AND STREET HALF-WIDTHS HAVE BEEN OBTAINED FROM A TAX PARCEL MAP AND EXISTING DRAWINGS AND ARE APPROXIMATE.

NOTES:

1. NO GRADING OR PERMANENT CONSTRUCTION SHALL OCCUR WITHIN DRIP LINES OF TREES THAT ARE TO REMAIN WITHOUT ARBORIST APPROVAL.

2. PRIOR TO CONSTRUCTION, GENERAL CONTRACTOR TO CONTACT DIGALERT TO MARK OUT EXISTING UNDERGROUND UTILITIES. IN THE EVENT OF CONFLICTS, CONTRACTOR TO CONTACT PDC.

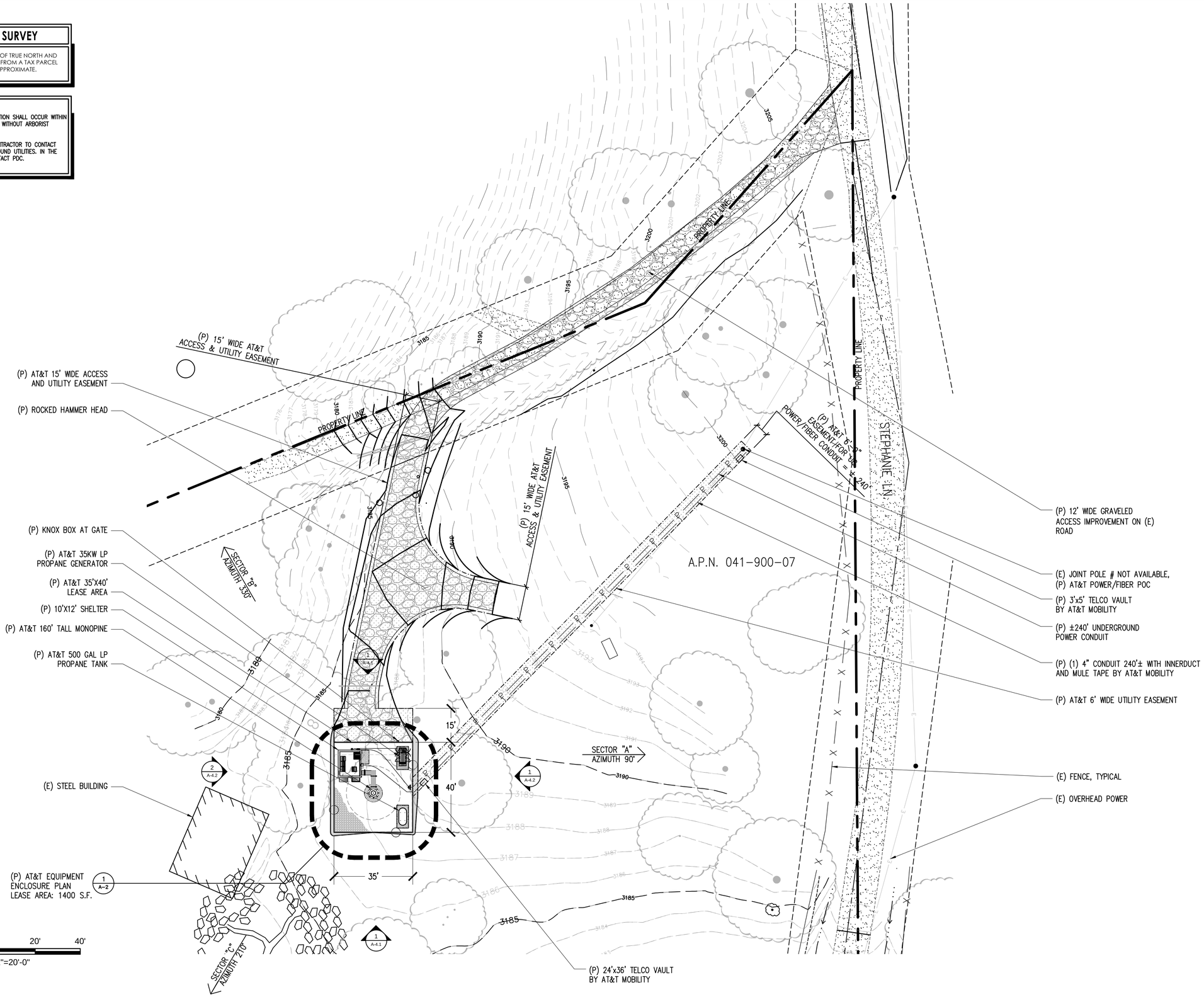

1 SITE PLAN
1"=20'-0"

SITE TYPE: MONOPINE/SHELTER

Issued For:

SWEENEY'S CROSSING

7800 STEPHANIE LANE

SOMERSET, CA 95684

PREPARED FOR

at&t

2600 Camino Ramon, 4W850 N
San Ramon, California 94583

EPIC WIRELESS GROUP

AT&T SITE NO:	CVL03434
PROJECT NO:	13787575
DRAWN BY:	CES
CHECKED BY:	CES

REV	DATE	DESCRIPTION
0	03/29/17	ZD 90%
0	05/08/17	ZD 100%
1	05/31/17	ZD 100% EASEMENT CHANGE

Licensor:

REGISTERED PROFESSIONAL ENGINEER CRAIG M. HORNER No. 84674 CIVIL STATE OF CALIFORNIA

IT IS A VIOLATION OF LAW FOR ANY PERSON, UNLESS THEY ARE ACTING UNDER THE DIRECTION OF A LICENSED PROFESSIONAL ENGINEER, TO ALTER THIS DOCUMENT.

Engineer:

ADAPTIVE RE-USE ENGINEERING
Craig Horner, PE 84674
214-407-3184
3112 LEATHA WAY
SACRAMENTO, CA 95821
craigmhorner@yahoo.com

SHEET TITLE:

SITE PLAN

SHEET NUMBER:

A-1.1

KEYNOTES

1. (P) RF RACK #1
2. (P) RF RACK #2
3. (P) POWER PLANT RACK W/ (2) STRING OF BATTERIES
4. (P) TELCO RACK
5. (P) 2A:20BC RATED FIRE EXTINGUISHER IN WEATHER RESISTANT CABINET
6. (P) GPS UNIT
7. (P) CAMLOCK GENERATOR INTERFACE
8. (P) 35KW LP PROPANE STANDBY GENERATOR
9. (P) 500 GAL LP PROPANE STORAGE TANK TO BE LEASED FROM SUBURBAN PROPANE
10. (P) 12'-0" WIDE ACCESS GATE
11. (P) 6'-0" CHAIN LINK FENCE w/ 3 STRAND ANTI CLIMB BARRIER AND GREEN VINYL SLATS
12. (P) 18"X18" TELCO PULL CAN BY AT&T MOBILITY
13. (P) 153'-00" MONOPINE W/ 7' BRANCH CROWN TO 160' OVER ALL HEIGHT
14. (P) ICE BRIDGE
15. (P) AT&T 10'-0" x 12'-0" PRE-MANUFACTURED EQUIPMENT SHELTER
16. (P) 200A 42 CIRCUIT LOAD CENTER / AUTOMATIC & MANUAL TRANSFER SWITCH
17. (P) TELCO BOARD BY AT&T MOBILITY
18. (P) 4 TON HVAC UNIT
19. 6'-0" X 3'-6" CONCRETE STOOP
20. (P) 200A MAIN DISCONNECT
21. (P) GRAVEL BED
22. (P) AT&T 35'X40' LEASE AREA
23. (P) 5'X10' SLAB
24. (P) 5'X10' GEN SLAB
25. (P) TOWER CAISSON (DESIGN BY OTHERS)
26. (P) U/G TOWER MATT SLAB (DESIGN BY OTHERS)
27. (P) FIRE DEPARTMENT KNOX BOX
28. (P) CARRIER CONTACT SIGNAGE AT GATE
29. (P) 24' MAX BRANCH DIAMETER AT BASE OF (P) MONOPINE
30. (P) 200A ELECTRICAL METER/WITH MAIN DISCONNECT ON (P) H-FRAME
31. (P) CIENNA CABINET BY AT&T LANDLINE IN TELCO RACK
32. (P) BBC-13X 1.2LB PSF MIN. OR EQUIV., SOUND BLANKET AT INTERIOR SIDE OF FENCE
33. (P) SHIELDED DOWN TILT LIGHT WITH MOTION SENSOR AND AUTO SHUTOFF TIMER

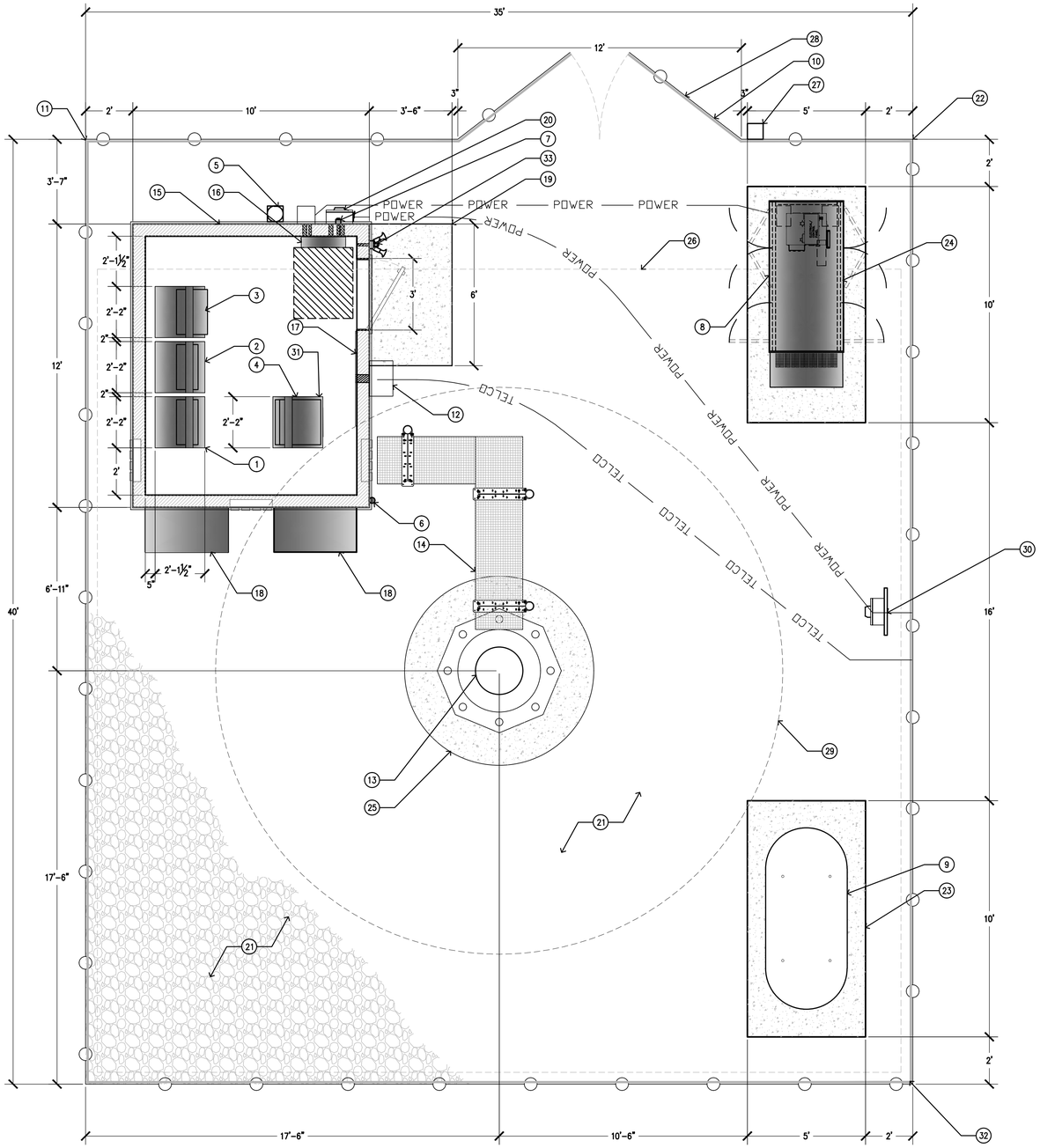

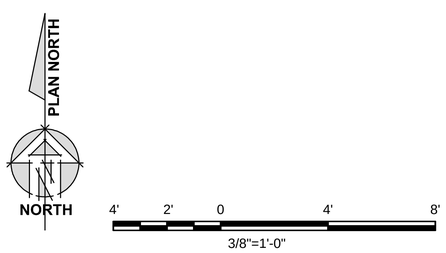

1 EQUIPMENT ENCLOSURE PLAN - EXTERIOR SHELTER
3/8"=1'-0"

SITE TYPE: MONOPINE/SHELTER

Issued For:

SWEENEY'S CROSSING

7800 STEPHANIE LANE

SOMERSET, CA 95684

PREPARED FOR

at&t

2600 Camino Ramon, 4W850 N
San Ramon, California 94583

EPIC WIRELESS GROUP

AT&T SITE NO:	CVL03434
PROJECT NO:	13787575
DRAWN BY:	CES
CHECKED BY:	CES

REV	DATE	DESCRIPTION
0	03/29/17	ZD 90%
0	05/08/17	ZD 100%
1	05/31/17	ZD 100% EASEMENT CHANGE

Licensor:

REGISTERED PROFESSIONAL ENGINEER
CRAIG M. HORNER
No. 84674
CIVIL
STATE OF CALIFORNIA

IT IS A VIOLATION OF LAW FOR ANY PERSON, UNLESS THEY ARE ACTING UNDER THE DIRECTION OF A LICENSED PROFESSIONAL ENGINEER, TO ALTER THIS DOCUMENT.

Engineer:

ADAPTIVE RE-USE ENGINEERING
Craig Horner, PE 84674
214-407-3184
3112 LEATHA WAY
SACRAMENTO, CA 95821
craigmhorner@yahoo.com

SHEET TITLE:

EQUIPMENT AREA PLAN

SHEET NUMBER:

A-2

RAYCAP DC6-48-60-18-8F &
DC6-48-60-0-8F SURGE SUPPRESSION SOLUTION

COLOR: BLACK/SILVER

DIMENSIONS: 11" DIA X 27" TALL W/ 9" BASE

WEIGHT: +/- 50 LBS. (INCLUDING MOUNTING HARDWARE

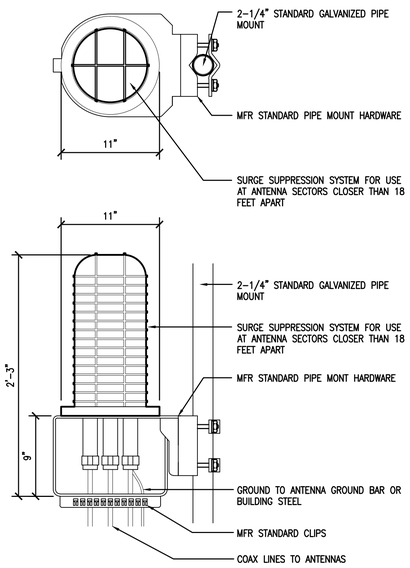

1 DC SURGE SUPPRESSION (SQUID)
1 1/2"=1'-0"

ERICSSON WCS RRU-32

MODEL: KRC161 423/1

COLOR: WHITE

DIMENSIONS: 29.9" TALL X 13.3" WIDE X 9.5" DEEP (INCLUDING SUNSHIELD)

WIEGHT: +/- 77LBS. (INCLUDING MOUNTING HARDWARE)

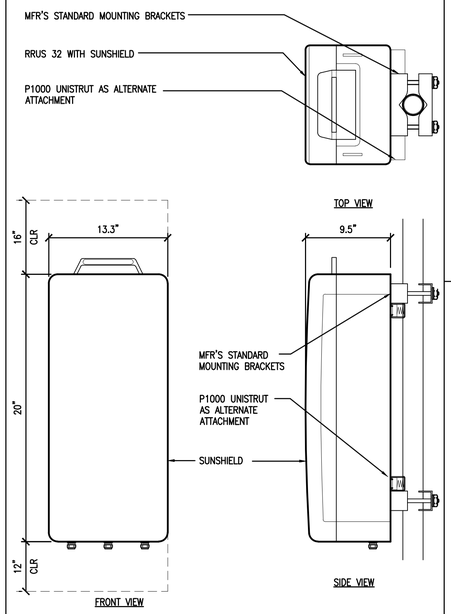

2 ERICSSON WCS RRUS-32 REMOTE RADIO UNIT
1 1/2"=1'-0"

ERICSSON RRUS 11 REMOTE RADIO UNIT

COLOR: WHITE

DIMENSIONS: 19.7" TALL X 17" WIDE X 7.2" DEEP (INCLUDING SUNSHIELD)

WIEGHT: +/- 50 LBS. (INCLUDING MOUNTING HARDWARE)

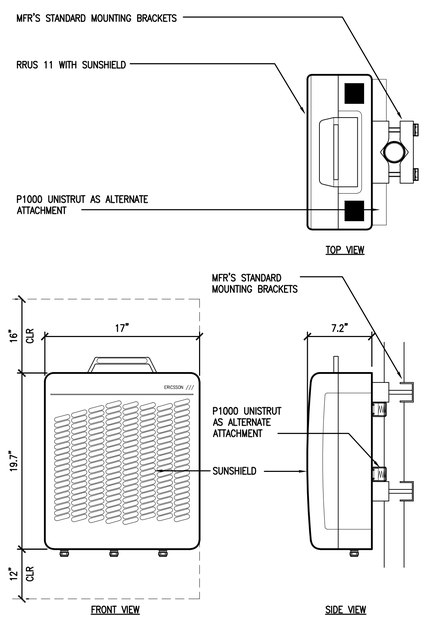

3 ERICSSON RRUS-11 REMOTE RADIO UNIT
1 1/2"=1'-0"

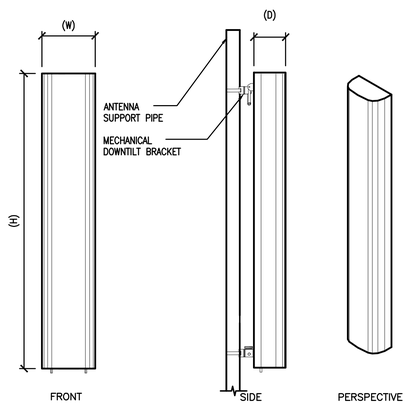

ANTENNA = QUINTEL QS6656-3
WIND AREA = 6 SQ.FT.
WEIGHT = 65 LBS
DIMENSIONS = 72" (H) x 12" (W) x 9.6" (D)

ANTENNA = QUINTEL QS6658-3
WIND AREA = 6 SQ.FT.
WEIGHT = 77 LBS
DIMENSIONS = 72" (H) x 12" (W) x 9.6" (D)

ANTENNA = CCI HBSA-M65R-KU-H6
WIND AREA = 6.5 SQ.FT.
WEIGHT = 44.5 LBS
DIMENSIONS = 68.1" (H) x 13.7" (W) x 8.5" (D)

ANTENNA = CCI HBSA-M65R-KU-H6
WIND AREA = 6.5 SQ.FT.
WEIGHT = 45.6 LBS
DIMENSIONS = 68.1" (H) x 13.7" (W) x 8.5" (D)

4 HEX ANTENNA SPEC
3/4"=1'-0"

RF SCHEDULE

SECTOR		ANTENNA MODEL NO.	AZIMUTH	RAD CENTER	RRU	TMA	FIBER LENGTH	COAX LENGTH	FIBER NO.
ALPHA	A1	QS6656-3	90°	± 140'-0"	(1) RRU11 (1) RRU32	N/A	± 170'	± N/A	TRUNK 1
	A2	QS6658-3	90°	± 140'-0"	(2) RRU11 (1) RRU32	N/A	± 170'	± N/A	TRUNK 1
	A3	HBSA-M65R-KU-H6	90°	± 150'-0"	(1) RRU32	N/A	± 180'	± N/A	TRUNK 4
	A4	HBSA-M65R-KU-H6	90°	± 150'-0"	(1) RRU32	N/A	± 180'	± N/A	TRUNK 4
BETA	B1	QS6656-3	330°	± 140'-0"	(1) RRU11 (1) RRU32	N/A	± 170'	± N/A	TRUNK 2
	B2	QS6658-3	330°	± 140'-0"	(2) RRU11 (1) RRU32	N/A	± 170'	± N/A	TRUNK 2
	B3	HBSA-M65R-KU-H6	330°	± 150'-0"	(1) RRU32	N/A	± 180'	± N/A	TRUNK 4
	B4	HBSA-M65R-KU-H6	330°	± 150'-0"	(1) RRU32	N/A	± 180'	± N/A	TRUNK 4
GAMMA	C1	QS6656-3	210°	± 140'-0"	(1) RRU11 (1) RRU32	N/A	± 170'	± N/A	TRUNK 3
	C2	QS6658-3	210°	± 140'-0"	(2) RRU11 (1) RRU32	N/A	± 170'	± N/A	TRUNK 3
	C3	HBSA-M65R-KU-H6	210°	± 150'-0"	(1) RRU32	N/A	± 180'	± N/A	TRUNK 4
	C4	HBSA-M65R-KU-H6	210°	± 150'-0"	(1) RRU32	N/A	± 180'	± N/A	TRUNK 4

5 RF SCHEDULE
NOT TO SCALE

RF DATA SHEET v1.00.00 DATED 02/15/17

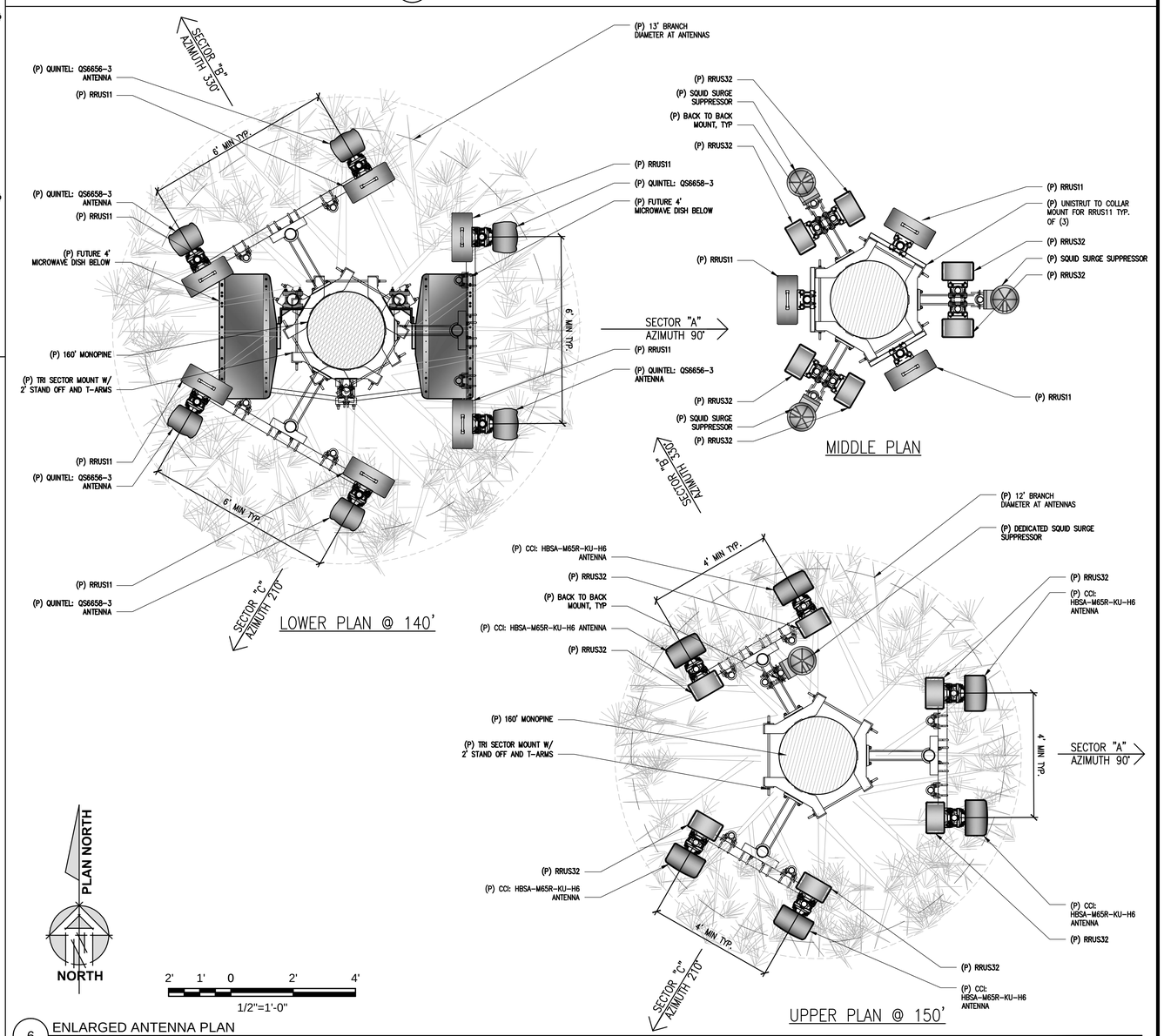

6 ENLARGED ANTENNA PLAN
1/2"=1'-0"

SITE TYPE: MONOPINE

Issued For:

SWEENEY'S CROSSING

7800 STEPHANIE LANE

SOMERSET, CA 95684

PREPARED FOR

at&t

2600 Camino Ramon, 4W850 N
San Ramon, California 94583

EPIC WIRELESS GROUP

AT&T SITE NO:	CVL03434
PROJECT NO:	13787575
DRAWN BY:	CES
CHECKED BY:	CES

REV	DATE	DESCRIPTION
0	03/29/17	ZD 90%
0	05/08/17	ZD 100%
1	05/31/17	ZD 100% EASEMENT CHANGE

Licensor:

REGISTERED PROFESSIONAL ENGINEER CRAIG M. HORNER No. 84674 CIVIL STATE OF CALIFORNIA

IT IS A VIOLATION OF LAW FOR ANY PERSON, UNLESS THEY ARE ACTING UNDER THE DIRECTION OF A LICENSED PROFESSIONAL ENGINEER, TO ALTER THIS DOCUMENT.

Engineer:

ADAPTIVE RE-USE ENGINEERING
Craig Horner, PE 84674
214-407-3184
3112 LEATHA WAY
SACRAMENTO, CA 95821
craigmhorner@yahoo.com

SHEET TITLE:

ANTENNA PLAN & DETAILS

SHEET NUMBER:

A-3

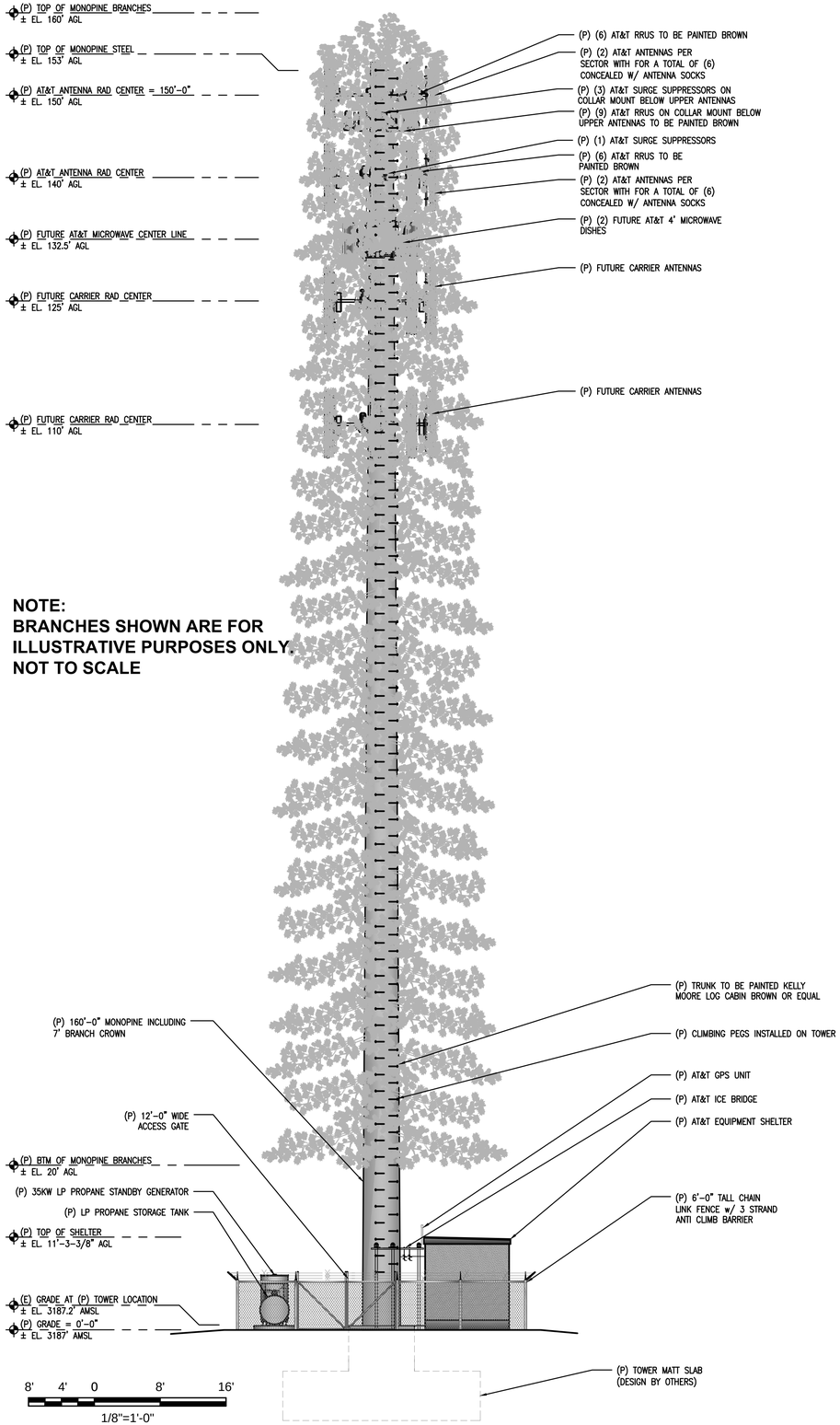

NOTE:
BRANCHES SHOWN ARE FOR ILLUSTRATIVE PURPOSES ONLY.
NOT TO SCALE

1 PROPOSED NORTH ELEVATION
1/8"=1'-0"

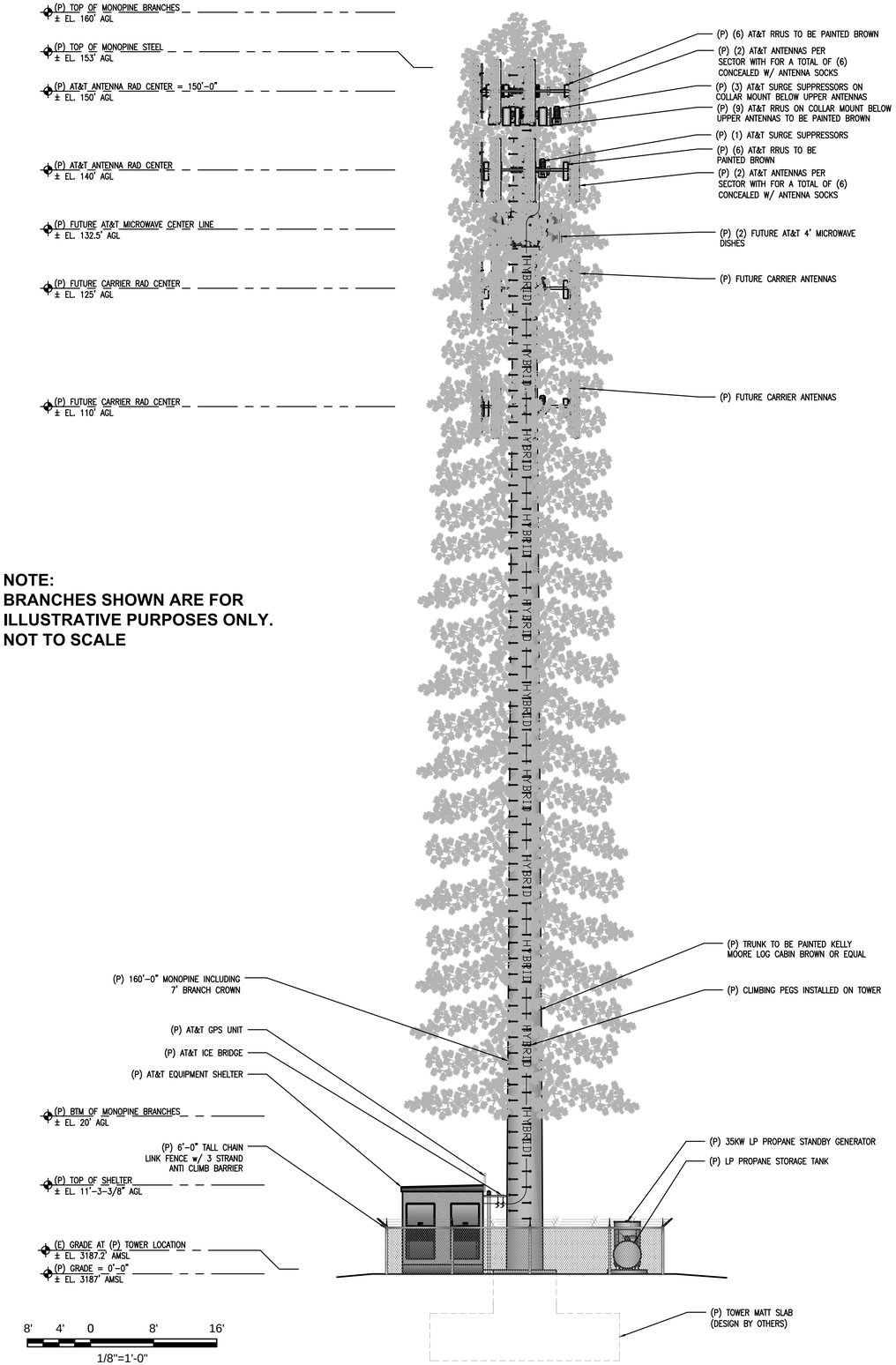

NOTE:
BRANCHES SHOWN ARE FOR ILLUSTRATIVE PURPOSES ONLY.
NOT TO SCALE

2 PROPOSED SOUTH ELEVATION
1/8"=1'-0"

SITE TYPE: MONOPINE/SHELTER

Issued For:

SWEENEY'S CROSSING

7800 STEPHANIE LANE

SOMERSET, CA 95684

PREPARED FOR

at&t

2600 Camino Ramon, 4W850 N
San Ramon, California 94583

EPIC WIRELESS GROUP

AT&T SITE NO:	CVL03434
PROJECT NO:	13787575
DRAWN BY:	CES
CHECKED BY:	CES

REV	DATE	DESCRIPTION
0	03/29/17	ZD 90%
0	05/08/17	ZD 100%
1	05/31/17	ZD 100% EASEMENT CHANGE

Licensor:

REGISTERED PROFESSIONAL ENGINEER CRAIG M. HORNER No. 84674 CIVIL STATE OF CALIFORNIA

IT IS A VIOLATION OF LAW FOR ANY PERSON, UNLESS THEY ARE ACTING UNDER THE DIRECTION OF A LICENSED PROFESSIONAL ENGINEER, TO ALTER THIS DOCUMENT.

Engineer:

ADAPTIVE RE-USE ENGINEERING
Craig Horner, PE 84674
214-407-3184
3112 LEATHA WAY
SACRAMENTO, CA 95821
craigmhorner@yahoo.com

SHEET TITLE:

PROPOSED MONOPINE NORTH - SOUTH ELEVATION

SHEET NUMBER:

A-4.1

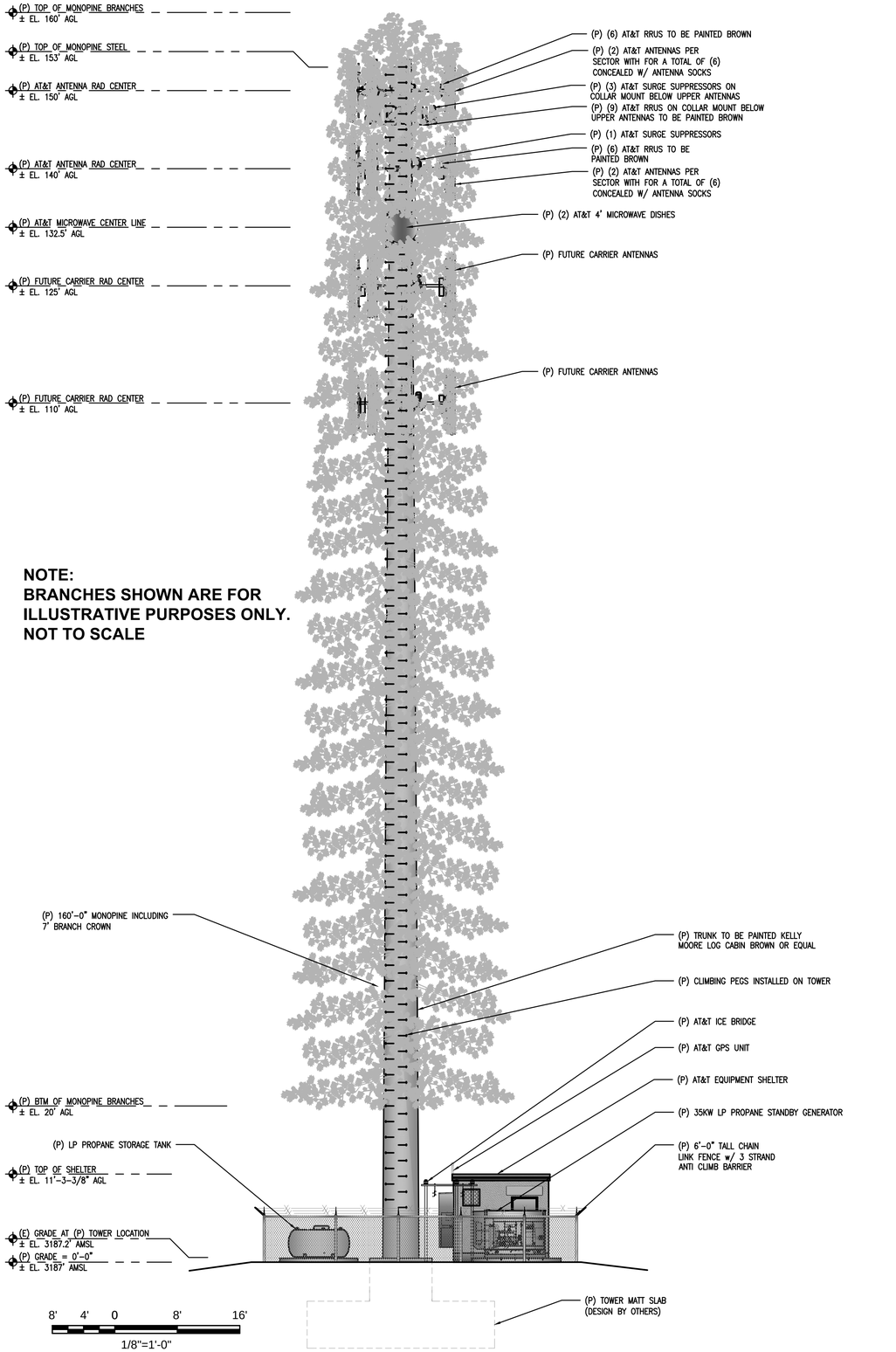

1 PROPOSED EAST ELEVATION
1/8"=1'-0"

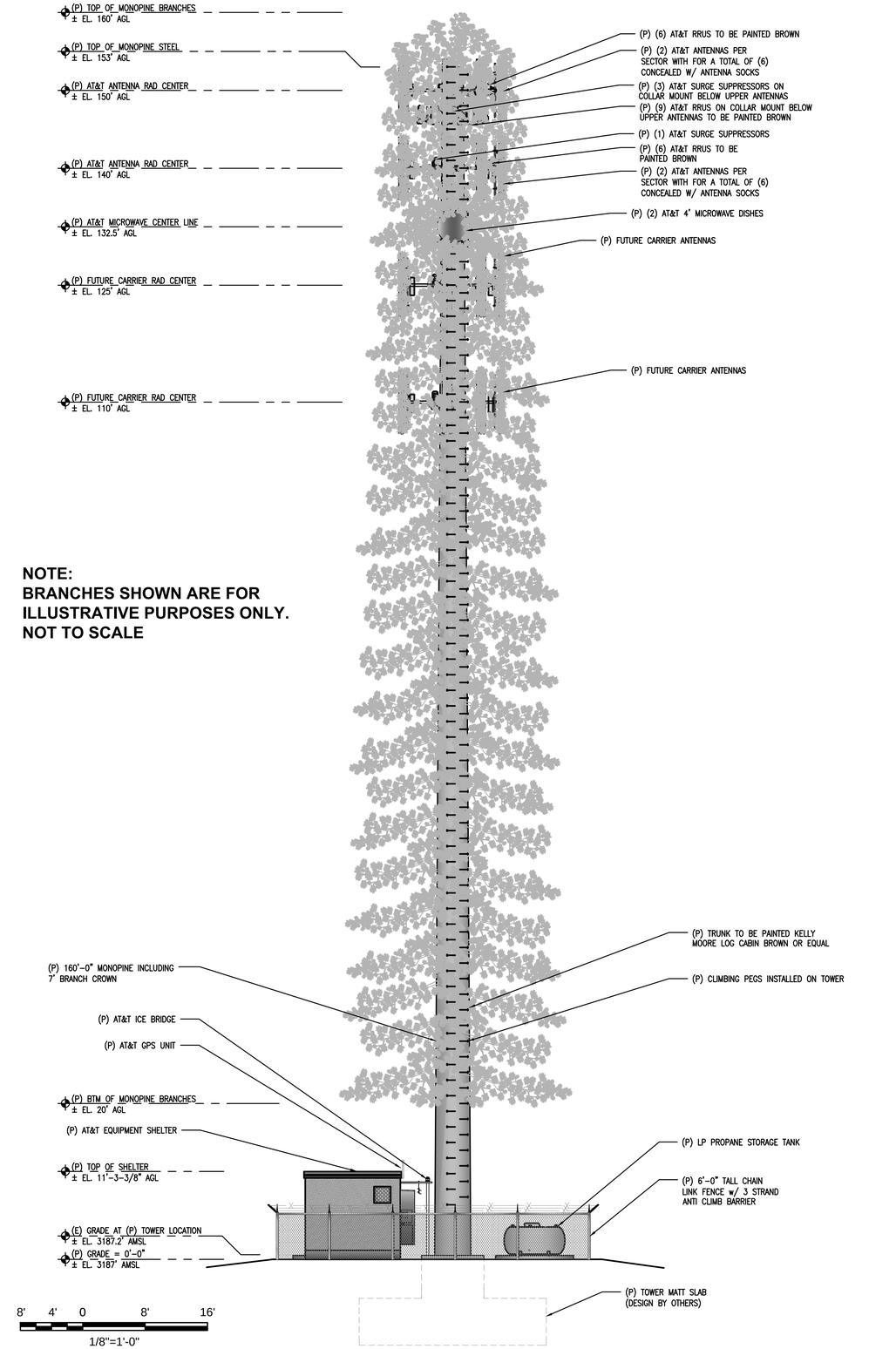

2 PROPOSED WEST ELEVATION
1/8"=1'-0"

SITE TYPE: MONOPINE/SHELTER

Issued For:

SWEENEY'S CROSSING

7800 STEPHANIE LANE

SOMERSET, CA 95684

PREPARED FOR

at&t

2600 Camino Ramon, 4W850 N
San Ramon, California 94583

EPIC WIRELESS GROUP

AT&T SITE NO:	CVL03434
PROJECT NO:	13787575
DRAWN BY:	CES
CHECKED BY:	CES

REV	DATE	DESCRIPTION
0	03/29/17	ZD 90%
0	05/08/17	ZD 100%
1	05/31/17	ZD 100% EASEMENT CHANGE

Licensor:

REGISTERED PROFESSIONAL ENGINEER
CRAIG M. HORNER
No. 84674
CIVIL
STATE OF CALIFORNIA

IT IS A VIOLATION OF LAW FOR ANY PERSON, UNLESS THEY ARE ACTING UNDER THE DIRECTION OF A LICENSED PROFESSIONAL ENGINEER, TO ALTER THIS DOCUMENT.

Engineer:

ADAPTIVE RE-USE ENGINEERING
Craig Horner, PE 84674
214-407-3184
3112 LEATHA WAY
SACRAMENTO, CA 95821
craigmhorner@yahoo.com

SHEET TITLE:

PROPOSED MONOPINE WEST - EAST ELEVATION

SHEET NUMBER:

A-4.2