COUNTY OF EL DORADO, CALIFORNIA
CHIEF ADMINISTRATIVE OFFICE
PROCUREMENT AND CONTRACTS DIVISION
solicitation on behalf of the

ENVIRONMENTAL MANAGEMENT DEPARTMENT

REQUEST FOR BIDS

INCLUDING

NOTICE TO BIDDERS, INSTRUCTIONS TO BIDDERS, PROPOSAL, CONTRACT, CONDITIONS OF THE CONTRACT, PROJECT SPECIFICATIONS, AND PROJECT DRAWINGS

FOR

UNION MINE WASTEWATER TREATMENT FACILITY HEADWORKS CONSTRUCTION PROJECT

BID #24-0056

BIDS MUST BE RECEIVED BY:
2:00 P.M. on SEPTEMBER 13, 2024
THROUGH QUEST CONSTRUCTION DATA NETWORK

COUNTY OF EL DORADO, STATE OF CALIFORNIA
ENVIRONMENTAL MANAGEMENT DEPARTMENT

UNION MINE WASTEWATER TREATMENT FACILITY
HEADWORKS CONSTRUCTION PROJECT

BID #24-0056

TABLE OF CONTENTS

NOTICE TO BIDDERS	**N-1**
INSTRUCTIONS TO BIDDERS	**I-1**
PROPOSAL	**P-1**
DRAFT AGREEMENT FOR CONSTRUCTION SERVICES	**C-1**
PAYMENT BOND	**NO PAGE #**
PERFORMANCE BOND	**NO PAGE #**
CALIFORNIA FORM 590 - 2022 WITHOLDING CERTIFICATE	**NO PAGE #**
COUNTY OF EL DORADO PAYEE DATA RECORD FORM	**NO PAGE #**
CERTIFICATE OF INSURANCE FORM	**NO PAGE #**
CONDITIONS OF THE CONTRACT	**CC-1**
ATTACHMENT A – PROJECT SPECIFICATIONS	
ATTACHMENT B – PROJECT DRAWINGS	

COUNTY OF EL DORADO, CALIFORNIA
ENVIRONMENTAL MANAGEMENT DEPARTMENT

NOTICE TO BIDDERS

NOTICE IS HEREBY GIVEN by the County of El Dorado, State of California, that bids submitted through Quest Construction Data Network (Quest) for work in accordance with the Contract Documents designated:

UNION MINE WASTEWATER TREATMENT FACILITY HEADWORKS CONSTRUCTION PROJECT

BID #24-0056

will be received by the Chief Administrative Office, Procurement & Contracts Division, online through Quest Construction Data Network (Quest) Project #9145613, until **2:00 p.m. Pacific Time on September 13, 2024,** at which time and place bids will be publicly opened and read by the Chief Administrative Office, Procurement & Contracts Division. The bid opening will be held virtually through Zoom. The virtual meeting can be accessed via the following: https://us02web.zoom.us/j/86314760804. Meeting ID: 863 1476 0804/ (669)900-6833 (San Jose), (253)215-8782 US (Tacoma), (346)248-7799 US (Houston).

LOCATION/DESCRIPTION OF THE WORK: The Union Mine Wastewater Treatment Facility is located at 5700 Union Mine Road, El Dorado, California 95623. The Work to be done as shown on the Contract Documents, generally consists of, but is not limited to:

A. The furnishing of all labor, materials, and equipment for the construction and renovation of a new receiving station "headworks" for the Union Mine Wastewater Treatment Facility, including screening and grit removal. Services shall include at a minimum: project meetings, safety plans, product handling, equipment installation, disinfection of water lines, testing of pipelines/gravity sewer lines and manholes, earthwork, dewatering, trenching, backfilling, utility line marking, vegetative erosion control, stormwater runoff control, paving, concrete work, piping, pump work, electrical work, grounding, instrumentation, equipment and system testing and start up, painting and finish, and site restoration.

   The applicable project specifications and project drawings are highlighted in Attachments A and B.

B. The contract time shall be **sixteen (16) to twenty-four (24) months.**

C. For bonding purposes, the estimated project cost is **approximately $2,864,000.**

D. A Mandatory Pre-Bid Site Visit is scheduled for this contract on **August 22, 2024, starting PROMPTLY at 10:00 a.m. at the County Wastewater Treatment Facility located at 5700 Union Mine Road, El Dorado, California 95623**. **ATTENDANCE AT THE PRE-BID SITE VISIT IS MANDATORY. REPRESENTATIVES SHALL FOLLOW COUNTY COVID 19 POLICY WHILE ON COUNTY PREMISES WHICH MAY INCLUDE THE USE OF FACE COVERINGS. PLEASE REFER TO COUNTY POLICY E-13 AVAILABLE AT:** https://www.edcgov.us/Government/BOS/Documents/Board%20Policy%20E-13.pdf. The Bidder's representative will be required to sign an attendance sheet and provide the name of the firm being represented. The County will post on the Quest website such Addenda as the County in its discretion considers necessary in response to questions arising and information presented at the Pre-Bid Site Visit. Oral statements shall not be relied upon and will not be binding or legally effective. Addenda issued as a result of the Pre-Bid Site Visit shall constitute the sole and exclusive record and statement of the results of the Pre-Bid Visit.

E. This project is being formally bid in accordance with Public Contract Code 22032 and County of El Dorado Ordinance Code section 3.14.040.

PRE-BID COMMUNICATIONS & REQUESTS FOR INFORMATION (RFI): Questions will be accepted in writing only, through submission to the Quest website under the Quest Project #9145613 "Project Q&A", by email, or in hard copy, until **5:00 P.M. on August 26, 2024**. Pre-bid communications and RFI are to be submitted to the email shown on the Quest website under the Quest #9145613 "Project Q&A", emailed to: tyler.prince@edcgov.us with BID #24-0056 – RFI as the subject, or in hard copy delivered to: County of El Dorado, Procurement & Contracts, 330 Fair Lane, Placerville, California 95667, BID #24-0056 – RFI. If a response does not require an addenda, answers to questions deemed relevant and appropriate will be uploaded to

Quest on or about **September 5, 2024**. Oral responses concerning the content of the Contract Documents shall not be relied upon and will not be binding or legally effective. Addenda will be uploaded in PDF format to Quest's website. To receive notification of addenda, interested bidders must be included on the Planholders List.

OBTAINING OR INSPECTING CONTRACT DOCUMENTS: The contract documents may be viewed and/or downloaded from the Quest Construction Data Network (Quest) website at http://www.questcdn.com. Interested parties may also access the Quest website by clicking on the link located on the Chief Administrative Office, Procurement and Contract's website at County of El Dorado - Projects (questcdn.com) and entering the Quest project #9145613.

Interested parties may view the Contract Documents on the Quest website at no charge. The digital Contract Documents may be downloaded for $42.00 by inputting the Quest project #9145613 on the websites' Project Search page. Please contact Quest CDN.com at 952-233-1632 or info@questcdn.com for assistance with free membership, registration, downloading, and working with this digital project information. To access the electronic bid form, download the project/request documents and click the online bidding button at the top of the advertisement screen. Physical paper copies of the Contract Documents may be examined by appointment at the County of El Dorado, Chief Administrative Office, Procurement and Contracts Division located at 330 Fair Lane, Placerville, California 95667; however, the Chief Administrative Office will no longer issue paper copies of the Contract Documents to bidders. To view the Contract Documents in person, contact Tyler Prince by phone at 530-621-6438 or by email at tyler.prince@edcgov.us.

By paying for and downloading the digital Contract Documents, interested bidders are automatically included on the Planholders List. The list of planholders will be available on Quest's website under "View Planholders." Those downloading the Contract Documents assume responsibility and risk for completeness of the downloaded Contract Documents. To be eligible to bid, interested parties must be included on the Planholders List.

ONLY CONTRACT DOCUMENTS, INCLUDING THE PROJECT SPECIFICATIONS AND PROJECT DRAWINGS, DOWNLOADED FROM QUEST AND SUBMITTED BY A BIDDER INCLUDED ON THE PLANHOLDERS LIST WILL BE CONSIDERED FOR BID SUBMITTAL.

CONTRACTORS LICENSE CLASSIFICATION: Bidders shall be properly licensed to perform the Work pursuant to the Contractors' State License Law (Business and Professions Code section 7000, et seq.) and shall possess a California **Class A – General Engineering Contractor's License** at the time the bid is submitted and shall maintain a valid license and certification through completion and acceptance of the Work, including the guarantee and acceptance period. Failure of the successful Bidder to obtain proper adequate licensing shall constitute a failure to execute the Contract and shall result in the forfeiture of the Bidder's security and may result in legal penalties.

CONTRACTOR REGISTRATION: No contractor or subcontractor may be listed on a bid proposal for a public works project or awarded a contract for a public works project unless registered with the Department of Industrial Relations pursuant to Labor Code sections 1771.1(a), 1725.5. Bids will not be accepted from unregistered contractors except as provided in section 1771.1.

PREVAILING WAGE REQUIREMENTS: In accordance with the provisions of Labor Code section 1770, et seq., the general prevailing rate of wages in the county in which the Work is to be done has been determined by the Director of the California Department of Industrial Relations. These wage rates appear in the California Department of Transportation publication entitled General Prevailing Wage Rates. Interested parties can obtain the current wage information by submitting their requests to the Department of Industrial Relations, Division of Labor Statistics and Research, P.O. Box 420603, San Francisco CA 94142-0603, Telephone (415) 703-4708 or by referring to the website at http://www.dir.ca.gov/dlsr/PWD. The rates at the time of the bid advertisement date of a project will remain in effect for the life of the project in accordance with the California Code of Regulations, as modified and effective January 27, 1997.

The prevailing wage rates that are in effect at the time of the bid closing will be attached to the resulting contract for the Contractor's records. Copies of the general prevailing rate of wages in the county in which the Work is to be done are also on file at the Environmental Management Department and are available upon request.

In accordance with the provisions of Labor Code section 1810, eight (8) hours of labor shall constitute a legal day's work upon all work done hereunder, and Contractor and any subcontractor employed under this Contract shall conform to and be bound by the provisions of Labor Code sections 1810 through 1815.

BID SECURITY: A bid security shall be provided with each bid. Bid security shall be in an amount of not less than ten percent (10%) of the total amount bid for the Work and shall be cash, a certified check, or cashier's check drawn to the order of the County of El Dorado or a Bidder's Bond executed by a surety satisfactory to the County of El Dorado on the **form provided in the Proposal section of these Contract Documents.**

Bidders are required to submit either an electronic Bidder's Bond through Surety2000 or a PDF copy of a hard copy Bidder's Bond with their bid. If a bid security other than a Bidder's Bond is being used, Bidders must upload a PDF copy of the bid security with their electronic bid submittal. If a PDF copy of the bid security is uploaded, the original bid security and acknowledgment must be provided to the Chief Administrative Office, Procurement and Contracts Division, after the bid opening but before the end of business on the first business day after the bid opening. If the Bidder chooses to utilize Surety2000, by submitting their bid, Bidder hereby agrees to hold the County of El Dorado harmless from and waive any and all claims against the County of El Dorado for any claims or damages that arise from or are related to the Bidder's use of Surety 2000.

PERFORMANCE AND PAYMENT BONDS: The successful Bidder shall be required to execute a Performance Bond and a Payment Bond for not less than one hundred percent (100%) of the construction price, issued by an Admitted Surety, an insurance organization authorized to transact business in the State of California.

CONTRACT EXECUTION: The successful bidder must sign the Contract form.

The bidder's security may be forfeited for failure to execute the contract within the time specified (Pub Cont Code §§ 10181, 10182, and 10183).

A copy of the Contract form is included in your Contract Documents.

SECURITIES SUBSTITUTION: Pursuant to Public Contract Code section 22300, and at the request and expense of the Contractor to whom the Contract is awarded, securities in a form approved by the County shall be permitted in substitution for money withheld by the County to ensure performance under the Contract.

BUY AMERICA: This Project is subject to the "Buy America" provisions of the Surface Transportation Assistance Act of 1982, as amended by the Intermodal Surface Transportation Efficiency Act of 1991, and the Moving Ahead for Progress in the 21st Century Act (MAP-21). Contractor agrees that it will comply with all of the applicable "Buy America" provisions and will hold County harmless, pursuant to the Indemnity provisions set forth herein, for any violations of these laws.

INSTRUCTIONS TO BIDDERS: All bidders should carefully review the Instructions to Bidders for more detailed information before submitting a Bid Proposal.

BY ORDER OF the Board of Supervisors, County of El Dorado, State of California.

Authorized by the Board of Supervisors on July 30, 2024 at Placerville, California.

Dated: _____

By: _____

Chair, Board of Supervisors

ATTEST:
Kim Dawson
Clerk of the Board of Supervisors

By: _____ Dated: _____
Deputy Clerk

*** END OF DOCUMENT ***

THESE INSTRUCTIONS SUPPLEMENT THE NOTICE TO BIDDERS, PROPOSAL, DRAFT CONTRACT, AND CONDITIONS OF THE CONTRACT

UNION MINE WASTEWATER TREATMENT FACILITY
HEADWORKS CONSTRUCTION PROJECT
BID #24-0056

INSTRUCTIONS TO BIDDERS

1. The County of El Dorado will receive sealed bids through online submission to Quest from Bidders as stipulated in the Notice to Bidders. **The Proposal including the Bidder's Security shall be submitted through Quest.** Bidders are cautioned that the timing of their online submission is based on when the submittal is RECEIVED by Quest, not when a submittal is initiated by a bidder. Online submittal transmissions can be delayed in an "Internet Traffic Jam" due to file transfer size, transmission speed, etc. For these reasons, the County recommends that bidders allow sufficient time to upload their response and attachment(s) and to resolve any issues that may arise. The closing date and time shall be governed by the Quest web clock, which does not allow submittals after the closing date and time. Quest will send a message to the Bidder's message center in Quest advising that their online submission (vbid) was successfully submitted. If you do not receive a successful submission confirmation, you are advised to contact Quest at 952-233-1632 or info@questcdn.com for assistance.

2. Bidders must submit bids only on forms provided in the Contract Documents downloaded from the Quest website and shall be accompanied by all documents and information required to be submitted by these Instructions to Bidders, the Notice to Bidders, and by law. Bids not submitted on the required forms provided in the Contract Documents downloaded by the bidder from the Quest website will be deemed nonresponsive and will be disqualified.

3. Bidders must complete and submit the Proposal, Proposal Bid Price Schedule, Substitutions Listing, Subcontractors Listing, Public Contract Code section 10285.1 Statement, Public Contract Code section 10162 Questionnaire, Non-Collusion Affidavit, Iran Contracting Act Verification Form, California Levine Act Statement, Confidentiality of Information Provided, and page P-14, along with P-15 through P-17, as applicable. Bids submitted without the required documentation will be deemed nonresponsive and will be disqualified.

4. Bidders must supply all information required by the Contract Documents and specifications. Bids must be complete. Late bids, unlabeled bids, incomplete bids, or bids otherwise not in compliance with these bid documents will be rejected. The County reserves the right at its sole discretion to reject any bid as nonresponsive as a result of any error or omission in the bid.

5. Bidders may not modify the Proposal Document or qualify their bids.

6. Submission of a bid signifies that the Bidder has done a careful examination of the Contract Documents and has a complete understanding of the nature, extent, and location of Work to be performed. Bidder must complete the tasks listed below in subsections "a - c" as a condition to bidding, and submission of bid shall constitute the Bidder's express representation to the County that Bidder has fully completed the following:

    a. Bidder has downloaded all documents related to the project from the Quest website and takes responsibility for their completeness;

    b. Bidder has attended the mandatory pre-bid meeting and has examined thoroughly and understands the nature and extent of the Contract Documents, Work, Site, locality, actual conditions, all local conditions, and federal, state, and local laws and regulations that in any manner may affect cost, progress, performance or furnishing of Work or which relate to any aspect of the means, methods, techniques, sequences or procedures of construction to be employed by Bidder and safety precautions and programs incident thereto;

    c. Bidder has given the County representative during the bid period prompt written notice of all conflicts, errors, ambiguities, or discrepancies that it has discovered in or among the Contract

Documents and actual conditions and the written resolution thereof by County is acceptable to Bidder.

7. The following represents the schedule for this Project and is subject to change. All times listed are Pacific Time:

Bid Issuance	AUGUST 6, 2024
Pre-Bid Meeting (Mandatory)	AUGUST 22, 2024
Deadline for Final Questions	AUGUST 26, 2024 - 5:00 P.M.
Bid Submission Deadline	SEPTEMBER 13, 2024 - 2:00 P.M.
Notice of Intent to Award Posting Estimate	SEPTEMBER 18, 2024

8. No Bid may be withdrawn after the time established for receiving bids or before the award and execution of the Contract, unless the award is delayed for a period exceeding sixty (60) calendar days.

9. Bids must be executed in accordance with the instructions given on the forms provided in the Contract Documents furnished by the County of El Dorado, Chief Administrative Office, Procurement and Contracts Division, through Quest Construction Data Network (Quest).

10. **BUSINESS LICENSE**: The County Business License Ordinance provides that it is unlawful for any person to furnish supplies or services, or transact any kind of business in the unincorporated territory of El Dorado County without possessing a County business license unless exempt under County Ordinance Code Section 5.08.070. The Bidder to whom an award is made shall comply with all of the requirements of the County Business License Ordinance, where applicable, prior to beginning work under this Contract and at all times during the term of this Contract.

11. **REQUIRED LISTING OF PROPOSED SUBCONTRACTORS**: Each Bid shall have listed therein the name and address of each subcontractor, to whom the Bidder proposes to subcontract portions of the work in an amount in excess of 1/2 of one percent of its total bid in accordance with the Subletting and Subcontracting Fair Practices Act, commencing with Section 4100 of the Public Contract Code. The Bidder shall also describe in the Subcontractor Listing the work to be performed by each subcontractor listed. The work to be performed by the subcontractor shall be shown by listing the description of the work, and portion of the work to be performed by the subcontractor in the form of a percentage calculated by dividing the work to be performed by the subcontractor by the lump sum bid price. At the time the bids are submitted all listed subcontractors shall be properly licensed to perform their designated portion of the work. The Bidder's attention is invited to other provisions of the Act related to the imposition of penalties for a failure to observe its provisions by using unauthorized subcontractors or by making unauthorized substitutions.

    Pursuant Labor Code sections 1725.5 and 1771.1, no contractor or subcontractor may be listed on a bid proposal for public works project or awarded a contract for a public works project unless registered with the Department of Industrial Relations.

12. **EMISSIONS REDUCTION**: Successful bidder shall comply with emission reduction regulations mandated by the California Air Resources Board, sign the certification of knowledge in the Agreement, and provide County a Certificate of Reported Compliance when road legal diesel vehicles with a gross vehicle weight over 14,000 pounds are included in their fleet. Contractor must require all sub-contractors to comply with such regulations and provide County a Certificate of Reported Compliance for each sub-contractor with road legal diesel vehicles over 14,000 pound gross vehicle weight.

    Successful bidder and its subcontractors shall at all times have valid Certificates of Reported Compliance as described in 13 California Code of Regulations section 2449(n) for fleets of vehicles subject to 13 CCR section 2449 which may be used in performance of the resulting contract. No such vehicle is permitted onsite unless and until the successful bidder provides County with a valid Certificate of Reported compliance.

13. **NONDISCRIMINATION**: Attention is directed to the following Notice that is required by Government Code section 12990, et seq., which shall also be included in any subcontract agreements:

NOTICE OF REQUIREMENT FOR NONDISCRIMINATION PROGRAM (GOVERNMENT CODE SECTION 12990)

Your attention is called to the Nondiscrimination Clause set forth or referred to herein, which is applicable to all nonexempt state construction contracts and subcontracts and to the Standard California Nondiscrimination Construction Contract Specifications set forth herein. The specifications are applicable to all nonexempt state construction contracts and subcontracts of $5,000 or more.

(2 California Code of Regulations section 11119.)

NONDISCRIMINATION CLAUSE

1. During the performance of this contract, contractor and its subcontractors shall not unlawfully discriminate against any employee or applicant for employment because of race, religious creed, color, national origin, ancestry, physical disability, mental disability, medical condition, genetic information, marital status, sex, gender, gender identity, gender expression, age, sexual orientation, or military and veteran status. Contractors and subcontractors shall insure that the evaluation and treatment of their employees and applicants for employment are free of such discrimination. Contractors and subcontractors shall comply with the provisions of the Fair Employment and Housing Act (Government Code section 12900, et seq.) and the applicable regulations promulgated thereunder (2 California Code of Regulations section 11000, et seq.). The applicable regulations of the Fair Employment and Housing Council implementing Government Code section 12990, set forth in Subchapter 5 of Division 4.1 of Title 2 of the California Code of Regulations are incorporated into this contract by reference and made a part hereof as if set forth in full. Contractor and its subcontractors shall give written notice of their obligations under this clause to labor organizations with which they have a collective bargaining or other agreement.

2. Contractor shall include the nondiscrimination and compliance provisions of this clause in all subcontracts to perform work under the contract.

(2 California Code of Regulations section 11105.)

STANDARD CALIFORNIA NONDISCRIMINATION CONSTRUCTION CONTRACT SPECIFICATIONS (GOVERNMENT CODE SECTION 12990)

These specifications are applicable to all state contractors and subcontractors having a construction contract or subcontract of $5,000 or more.

1. As used in the specifications:

   a. “Act” means the Fair Employment and Housing Act.

   b. “Administrator” means Administrator, Office of Compliance Programs, California Department of Fair Employment and Housing, or any person to whom the Administrator delegates authority;

2. Whenever the contractor or any subcontractor subcontracts a portion of the work, it shall include in each subcontract of $5,000 or more the nondiscrimination clause in this contract directly or through incorporation by reference. Any subcontract for work involving a construction trade shall also include the Standard California Construction Contract Specifications, either directly or through incorporation by reference.

3. The contractor shall implement the specific nondiscrimination standards provided in paragraphs 6(a) through (e) of these specifications.

4. Neither the provisions of any collective bargaining agreement, nor the failure by a union with whom the contractor has a collective bargaining agreement, to refer members of any group protected by the Act shall excuse the contractor's obligations under these

specifications, Government Code section 12990, or the regulations promulgated pursuant thereto.

5. In order for the nonworking training hours of apprentices and trainees to be counted, such apprentices and trainees must be employed by the contractor during the training period, and the contractor must have made a commitment to employ the apprentices and trainees at the completion of their training, subject to the availability of employment opportunities. Trainees must be trained pursuant to training programs approved by the U.S. Department of Labor or the California Department of Industrial Relations.

6. The contractor shall take specific actions to implement its nondiscrimination program. The evaluation of the contractor's compliance with these specifications shall be based upon its effort to achieve maximum results from its actions. The contractor must be able to demonstrate fully its efforts under steps a. through e. below:

a. Ensure and maintain a working environment free of harassment, intimidation, and coercion at all sites, and at all facilities at which the contractor's employees are assigned to work. The contractor shall specifically ensure that all foremen, superintendents, and other on-site supervisory personnel are aware of and carry out the contractor's obligations to maintain such a working environment.

b. Provide written notification within seven days to the director of the DFEH when the referral process of the union or unions with which the contractor has a collective bargaining agreement has impeded the contractor's efforts to meet its obligations.

c. Disseminate the contractor's equal employment opportunity policy by providing notice of the policy to unions and training, recruitment and outreach programs and requesting their cooperation in assisting the contractor to meet its obligations; and by posting the company policy on bulletin boards accessible to all employees at each location where construction work is performed.

d. Ensure all personnel making management and employment decisions regarding hiring, assignment, layoff, termination, conditions of work, training, rates of pay or other employment decisions, including all supervisory personnel, superintendents, general foremen, on-site foremen, etc., are aware of the contractor's equal employment opportunity policy and obligations, and discharge their responsibilities accordingly.

e. Ensure that seniority practices, job classifications, work assignments, and other personnel practices, do not have a discriminatory effect by continually monitoring all personnel and employment related activities to ensure that the equal employment opportunity policy and the contractor's obligations under these specifications are being carried out.

7. Contractors are encouraged to participate in voluntary associations that assist in fulfilling their equal employment opportunity obligations. The efforts of a contractor association, joint contractor-union, contractor-community, or other similar group of which the contractor is a member and participant, may be asserted as fulfilling any one or more of its obligations under these specifications provided that the contractor actively participates in the group, makes every effort to assure that the group has a positive impact on equal employment opportunity in the industry, ensures that the concrete benefits of the program are reflected in the contractor's workforce participation, and can provide access to documentation that demonstrates the effectiveness of actions taken on behalf of the contractor. The obligation to comply, however, is the contractor's.

8. The contractor is required to provide equal employment opportunity for all persons. Consequently, the contractor may be in violation of the Fair Employment and Housing Act (Government Code section 12990, et seq.) if a particular group is employed in a substantially disparate manner.

9. The contractor shall not use the nondiscrimination standards to discriminate against any person because race, religious creed, color, national origin, ancestry, physical disability,

mental disability, medical condition, genetic information, marital status, sex, gender, gender identity, gender expression, age, sexual orientation, or military and veteran status.

10. The contractor shall not enter into any subcontract with any person or firm decertified from state contracts pursuant to Government Code section 12990.

11. The contractor shall carry out such sanctions and penalties for violation of these specifications and the nondiscrimination clause, including suspension, termination and cancellation of existing subcontracts as may be imposed or ordered pursuant to Government Code section 12990 and its implementing regulations by the awarding agency. Any contractor who fails to carry out such sanctions and penalties shall be in violation of these specifications and Government Code section 12990.

12. The contractor shall designate a responsible official to monitor all employment related activity to ensure that the company equal employment opportunity policy is being carried out, to submit reports relating to the provisions hereof as may be required by OCP and to keep records. Records shall at least include for each employee the name, address, telephone numbers, construction trade, union affiliation if any, employee identification number when assigned, status, (e.g., mechanic, apprentice trainee, helper, or laborer), dates of changes in status, hours worked per week in the indicated trade, rate of pay, and locations at which the work was performed. Records shall be maintained in any easily understandable and retrievable form; however, to the degree that existing records satisfy this requirement, contractors shall not be required to maintain separate records.

(2 California Code of Regulations section 11122.)

14. **AWARD OF CONTRACT:** The County reserves the right after opening bids to reject any or all bids, to waive any irregularity in a bid, or to make award to the lowest responsive, responsible Bidder(s). The Purchasing Agent will recommend the bid for award by the Board of Supervisors. As a condition of award, the successful Bidder will be required to submit bonds and evidence of insurance prior to execution of the Agreement by the County. Failure to meet this requirement shall constitute abandonment of the Bid by the Bidder and forfeiture of Bidder's security. Award will then be made to the next lowest responsible, responsive bidder.

15. **BIDDERS PROTEST PROCEDURES:** The Chief Administrative Office, Procurement & Contracts Division, will notify all bidders in writing of its recommendation for award or rejection of bids, and the date and time on which the recommendation for award will be considered and acted upon by the Board of Supervisors ("Notice of Intent to Award"). All bidders may attend the Board of Supervisors meeting, address the Board, and be heard.

    Within 5 working days from the date of the Notice of Intent to Award, the Bidder protesting the recommendation for award must submit a formal written protest to the Procurement & Contracts Division, stating in detail the basis and reason for the protest. The Bidder must provide facts to support the protest including any evidence Bidder wishes to be considered together with the law, rule, regulation, or criteria on which the protest is based. The Bidder may attend the Board of Supervisors meeting at which the recommendation and bid protest will be considered. If the Bidder is not in attendance at that time, the bid protest may be dismissed by the Board of Supervisors without further consideration of the merits and the decision of the Board of Supervisors on the bid protest shall be final.

16. **PAYMENTS:** Attention is directed to Article 6.2 – APPLICATIONS FOR PAYMENT of Conditions of the Contract and Article 5 –PAYMENT of the Contract.

17. **SUBSTITUTIONS:** If the Bidder lists a manufacturer in its Proposal that is a substitute (i.e. "or equal"), such listing shall be considered a substitution request by the Bidder. If the Bidder is the apparent low Bidder, the Bidder shall, within two (2) business days following the bid opening, submit data substantiating the request for the substitution with the "or equal" item. Failure to submit such substantiating data within two (2) business days following the bid opening may result in the County deeming the apparent low Bidder non-responsive. If no substitute manufacturer is listed in its Proposal, the Bidder shall supply all materials as

specified in the Plans & Specifications. NO substitution request will be considered beyond two (2) business days following the bid opening.

18. **RETAINAGE FROM PAYMENTS:** Attention is directed to Article 6.4 – WITHOLDING FROM PAYMENTS of the Conditions of the Contract and Article 26 – RETAINAGE of the Contract.

19. The following documents are to be executed and submitted by the apparent low Bidder after bids have been opened and duly inspected, and the County transmits the Notice of Award package to the successful Bidder. Failure to properly and timely submit these documents entitles the County to determine that the Bidder has abandoned the contract and the bidder's security shall be forfeited to County.

    Submit the following documents to Tyler Prince, Chief Administrative Office, Procurement and Contracts Division, 330 Fair Lane, Placerville, California 95667 by 5:00 p.m. of the **TENTH** working day, following the date of the NOTICE OF AWARD OF CONTRACT letter. Execution of Contracts by the County depends upon approval of Insurance Certificates and Bonds, and associated contract documents.

    i. Contracts: The successful Bidder shall execute and submit the Agreements for the work associated with the Proposal Lump Sum Bid Price Schedule (See Draft Contract). Submit two (2) originals of Contract, each bearing an original signature.

    ii. County of El Dorado Performance Bond: To be executed by successful Bidder and surety each with notary acknowledgement. Successful Bidder shall furnish County with original copies of the Performance Bond and notary acknowledgment.

    iii. County of El Dorado Payment Bond: To be executed by successful Bidder and surety each with notary acknowledgement. Successful Bidder shall furnish County with original copies of the Payment Bond and notary acknowledgment.

    iv. Insurance certificates required by Conditions of the Contract, Article 8.

    v. California Form 590 – Withholding Exemption and County Payee Data Record Form

    vi. Certificate of Reported Compliance for road legal diesel vehicles over 14,000 pounds, if applicable.

    vii. The successful bidder shall provide copies of valid Certificates of Reported Compliance as described in 13 California Code of Regulations section 2449(n) for your fleet, and fleets of any listed subcontractors, of vehicles subject to 13 CCR section 2449 which may be used in performance of the resulting contract.

SPECIAL INSTRUCTIONS

i. All work must comply with Attachment A, Project Specifications, and Attachment B, Project Drawings.

ii. Logistics plan must be submitted to the El Dorado Environmental Management Department for approval before starting work. Must include designated staff parking areas, truck route plan and staging areas.

* END OF INSTRUCTIONS TO BIDDERS *

THIS IS A SAMPLE OF WHICH DETAILS ALL THE NECESSARY INFORMATION NEEDED FOR A COMPLETE PROPOSAL. PLEASE LOG INTO QUEST AND COMPLETE ALL ELECTRONIC FORMS UNDER QUEST PROJECT #9145613. PLEASE NOTE THAT SOME FORMS WILL NEED TO BE DOWNLOADED AND RE-UPLOADED WITH ALL THE NECESSARY INFOMATION FILLED OUT. IF YOU ARE NOT UTILIZING SURETY 2000, THEN A PDF OF YOUR BIDDERS BOND WILL NEED TO BE UPLOADED AT THE TIME OF BID AND A HARD COPY WILL NEED TO BE DROPPED OFF TO THE PROCUREMENT AND CONTRACTS DIVISION LOCATED AT 330 FAIR LANE, PLACERVILLE, CALIFORNIA 95667 BY END OF BUSINESS ON THE FIRST BUSINESS DAY AFTER THE BID OPENING.

THE USE OF PENCIL OR CORRECTION FLUID OR TAPE IS NOT ACCEPTABLE.
BID DOCUMENTS COMPLETED IN PENCIL OR CONTAINING THE USE OF CORRECTION FLUID OR TAPE WILL BE REJECTED.

ALL CHANGES MUST BE LINED OUT AND CORRECTIONS INSERTED ADJACENT TO THE CHANGE AND INITIALED BY THE BIDDER'S AUTHORIZED REPRESENTATIVE

THE REMAINDER OF THIS PAGE LEFT INTENTIONALLY BLANK

PROPOSAL

(to be submitted with Bidder's Security)

TO: CHIEF ADMINISTRATIVE OFFICE, PROCUREMENT and CONTRACTS DIVISION
COUNTY OF EL DORADO, STATE OF CALIFORNIA via Quest

for the completion of

UNION MINE WASTEWATER TREATMENT FACILITY
HEADWORKS CONSTRUCTION PROJECT

BID #24-0056

NAME OF BIDDER: _____

BUSINESS MAILING ADDRESS: _____

CITY, STATE, ZIP: _____

BUSINESS STREET ADDRESS: _____
(Please include even if P.O. Box used)

CITY, STATE, ZIP: _____

TELEPHONE NO: AREA CODE ( ) _____

FAX NO: AREA CODE ( ) _____

EMAIL ADDRESS _____

The work for which this Proposal is submitted is for the construction in accordance with these Contract Documents (including the payment of not less than the State general prevailing wage rates set forth herein), including any addenda thereto, the Contract annexed hereto, and also in accordance with the Labor Surcharge and Equipment Rental Rates in effect on the date the work is accomplished, and in accordance with the General Prevailing Wage rates. The Contract Documents for the work to be done are entitled:

UNION MINE WASTEWATER TREATMENT FACILITY
HEADWORKS CONSTRUCTION PROJECT

BID #24-0056

Bids are to be submitted for the entire work. The work includes LUMP SUM BID. Failure to submit a bid for the entire work will result in the bid being deemed non-responsive and will be disqualified. The County reserves the right to reject all bids.

The Bidder shall set forth a lump sum total for the BID, in clearly legible figures in the respective space provided for this purpose.

If the item total for the lump sum is unreadable or otherwise unclear, or is omitted, the bid may be deemed irregular.

Symbols such as commas and dollar signs will be ignored and have no mathematical significance in establishing lump sums. The written lump sum in numbers will be interpreted according to the number of digits and, if applicable, decimal placement.

The foregoing provisions for the resolution of specific irregularities cannot be so comprehensive as to cover every omission, inconsistency, error, or other irregularity which may occur in a bid. Any situation not specifically provided for will be determined in the discretion of the County, and that discretion will be exercised in the manner deemed by the County to best protect the public interest in the prompt and economical completion of the work. The decision of the County respecting the amount of a bid, or the existence or treatment of any irregularity in a bid, shall be final.

If this Proposal is accepted and the undersigned Bidder shall fail to enter into the Contract and furnish the two bonds in the sums required by the State Contract Act, with surety satisfaction to the County in accordance with the Special Provisions within ten (10) working days of the date of the letter notice from the County that the Contract has been awarded, the County may, at its option, determine that the Bidder has abandoned the Contract, and thereupon this Proposal and the acceptance thereof shall be null and void and the forfeiture of such security accompanying this Proposal shall operate and the same shall be the property of the County.

The undersigned Bidder acknowledges that a bid security must be submitted in the amount of not less than ten percent (10%) of the total Lump Sum Bid.

The undersigned, as Bidder, declares under penalty of perjury under the laws of the State of California that the only persons or parties interested in this Proposal, as principals, are those named herein; that this Proposal is made without collusion with any other person, firm, or corporation; that it has carefully examined the location of the proposed work, the annexed proposed form of Contract, Attachment A, Project Specifications, and Attachment B, Project Drawings; and that it proposes, and agrees if this Proposal is accepted, that it will contract with the County, in the form of the copy of the Draft Agreement annexed hereto, to provide all necessary machinery, tools, apparatus, and other means of construction, and to do all the work and furnish all the materials specified in the Contract, in the manner and time therein prescribed, and according to the requirements of the County as therein set forth, and that it will take in full payment therefore the following item prices, to wit:

N/A

For the project site, Bidder's scope of work shall include: Construction and renovation of a new receiving station "headworks" for the Union Mine Wastewater Treatment Facility, including screening and grit removal, as shown or required by the Contract Documents, Project Specifications, and Project Drawings. Should Bidder find relevant details missing from the original Contract Documents, including the Project Specifications and Project Drawings, Bidder shall alert County.

THE USE OF PENCIL OR CORRECTION FLUID OR TAPE IS NOT ACCEPTABLE.
BID DOCUMENTS COMPLETED IN PENCIL OR CONTAINING THE USE OF CORRECTION FLUID OR TAPE WILL BE REJECTED.

ALL CHANGES MUST BE LINED OUT AND CORRECTIONS INSERTED ADJACENT TO THE CHANGE AND INITIALED BY THE BIDDER'S AUTHORIZED REPRESENTATIVE

PROPOSAL BID PRICE SCHEDULE

UNION MINE WASTEWATER TREATMENT FACILITY HEADWORKS CONSTRUCTION PROJECT

BID #24-0056

Award of Contract: Bid will be awarded on the basis of the lowest responsive, responsible bidder based upon the total of the LUMP SUM bid and meeting all other requirements.

Lump Sum Bid Amount: $_____

NOTICE: Bidder's failure to execute the questionnaire and statements contained in this Bid as required by applicable laws and regulations, or the determinations by the County based upon those questionnaires and statements, may prohibit award of the subject Contract to the Bidder.

THE REMAINDER OF THIS PAGE LEFT INTENTIONALLY BLANK

THE USE OF PENCIL OR CORRECTION FLUID OR TAPE IS NOT ACCEPTABLE.
BID DOCUMENTS COMPLETED IN PENCIL OR CONTAINING THE USE OF CORRECTION FLUID OR TAPE WILL BE REJECTED.

ALL CHANGES MUST BE LINED OUT AND CORRECTIONS INSERTED ADJACENT TO THE CHANGE AND INITIALED BY THE BIDDER'S AUTHORIZED REPRESENTATIVE

SUBSTITUTIONS LISTING

The Bidder shall list any proposed substitutions in accordance with Section 17 of the "Instructions to Bidders".

Name			Description of Work

THE USE OF PENCIL OR CORRECTION FLUID OR TAPE IS NOT ACCEPTABLE.
BID DOCUMENTS COMPLETED IN PENCIL OR CONTAINING THE USE OF CORRECTION FLUID OR TAPE WILL BE REJECTED.

ALL CHANGES MUST BE LINED OUT AND CORRECTIONS INSERTED ADJACENT TO THE CHANGE AND INITIALED BY THE BIDDER'S AUTHORIZED REPRESENTATIVE

SUBCONTRACTORS LISTING

The Bidder shall list the name and address, contractor license number, and DIR registration number of each subcontractor to whom the Bidder proposes to subcontract portions of the work, in an amount in excess of one-half (½) of one percent (1%) of the total bid in accordance with the Subletting and Subcontracting Fair Practices Act, commencing with Section 4100 of the Public Contract Code and as required by the provisions in "Required Listing of Proposed Subcontractors" in the Notice to Bidders. **The Bidder shall list the description of work and state the percentage of work to be performed by each subcontractor as subcontracted amount divided by LUMP SUM BID amount.**

Name	Location of Business	Contractor License No. / DIR Registration No.	Description of Work and Percentage of Work Subcontracted

THE USE OF PENCIL OR CORRECTION FLUID OR TAPE IS NOT ACCEPTABLE.
BID DOCUMENTS COMPLETED IN PENCIL OR CONTAINING THE USE OF CORRECTION FLUID OR TAPE WILL BE REJECTED.

ALL CHANGES MUST BE LINED OUT AND CORRECTIONS INSERTED ADJACENT TO THE CHANGE AND INITIALED BY THE BIDDER'S AUTHORIZED REPRESENTATIVE

PUBLIC CONTRACT CODE SECTION 10285.1 STATEMENT

In accordance with Public Contract Code Section 10285.1 (Chapter 376, Stats. 1985), the Bidder hereby declares under penalty of perjury under the laws of the State of California that the Bidder has_____, has not _____ been convicted within the preceding three years of any offenses referred to in that Section, including any charge of fraud, bribery, collusion, conspiracy, or any other act in violation of any state or Federal antitrust law in connection with the bidding upon, award of, or performance of, any public works contract, as defined in Public Contract Code Section 1101, with any public entity, as defined in Public Contract Code Section 1100. The term "Bidder" is understood to include any partner, member, officer, director, responsible managing officer, or responsible managing employee thereof, as referred to in Section 10285.1.

NOTE: The Bidder must place a check mark after "has" or "has not" in one of the blank spaces provided.

The above Statement is part of the Proposal. Signing this Proposal on the signature portion thereof shall also constitute signature of this Statement.

Bidders are cautioned that making a false certification may subject the certifier to criminal prosecution.

Signature: _____ Date: _____

Name: _____

Title: _____

Firm: _____

THE USE OF PENCIL OR CORRECTION FLUID OR TAPE IS NOT ACCEPTABLE.
BID DOCUMENTS COMPLETED IN PENCIL OR CONTAINING THE USE OF CORRECTION FLUID OR TAPE WILL BE REJECTED.

ALL CHANGES MUST BE LINED OUT AND CORRECTIONS INSERTED ADJACENT TO THE CHANGE AND INITIALED BY THE BIDDER'S AUTHORIZED REPRESENTATIVE

PUBLIC CONTRACT CODE SECTION 10162 QUESTIONNAIRE

In accordance with Public Contract Code Section 10162, the Bidder shall complete, under penalty of perjury under the laws of the State of California, the following questionnaire:

Has the Bidder, any officer of the Bidder, or any employee of the Bidder who has a proprietary interest in the Bidder, ever been disqualified, removed, or otherwise prevented from bidding on, or completing a federal, state, or local government project because of a violation of law or a safety regulation?

Yes: _____ **No**: _____

If the answer is yes, explain the circumstances in the following space:

PUBLIC CONTRACT CODE SECTION 10232 STATEMENT

In accordance with Public Contract Code Section 10232, the Bidder hereby states under penalty of perjury under the laws of the State of California, that no more than one final unappealable finding of contempt of court by a Federal Court has been issued against the Bidder within the immediate preceding two year period because of the Bidder's failure to comply with an order of a Federal Court which orders the Bidder to comply with an order of the National Labor Relations Board.

NOTE:

The above Questionnaire and Statement are part of the Proposal. Signing this Proposal on the signature portion thereof shall also constitute signature of this Questionnaire and Statement.

Bidders are cautioned that making a false certification may subject the certifier to criminal prosecution.

NONCOLLUSION AFFIDAVIT
(Title 23 United States Code Section 112 and
Public Contract Code Section 7106)

In accordance with Title 23 United States Code, Section 112 and Public Contract Code Section 7106, the Bidder declares that the bid is not made in the interest of, or on behalf of, any undisclosed person, partnership, company, association, organization, or corporation; that the bid is genuine and not collusive or sham; that the Bidder has not directly or indirectly induced or solicited any other Bidder to put in false or sham bid, and has not directly or indirectly colluded, conspired, connived, or agreed with any Bidder or anyone else to put in a sham bid, or that anyone shall refrain from bidding; that the Bidder has not in any manner, directly or indirectly, sought by agreement, communication, or conference with anyone to fix the bid price of the Bidder or any other Bidder, or to fix any overhead, profit, or cost element of the bid price, or of that of any other Bidder, or to secure any advantage against the public body awarding the Contract of anyone interested in the proposed Contract; that all statements contained in the bid are true; and, further, that the Bidder has not, directly or indirectly, submitted his or her bid price or any breakdown thereof, or the contents thereof, or divulged information or data relative thereto, or paid, and will not pay, any fee to any corporation, partnership, company, association, organization, bid depository, or to any member or agent thereof to effectuate a collusive or sham bid.

NOTE:

The above Noncollusion Affidavit is part of the Proposal. Signing this Proposal on the signature portion thereof shall also constitute signature of this Noncollusion Affidavit.

Bidders are cautioned that making a false certification may subject the certifier to criminal prosecution.

Signature: _____ Date: _____

Name: _____

Title: _____

Firm: _____

(Public Contract Code sections 2202-2208)

Prior to bidding on, submitting a proposal or executing a contract or renewal for a State of California contract for goods or services of $1,000,000 or more, a vendor must either: a) certify it is **not** on the current list of persons engaged in investment activities in Iran created by the California Department of General Services ("DGS") pursuant to Public Contract Code section 2203(b) and is not a financial institution extending twenty million dollars ($20,000,000) or more in credit to another person, for 45 days or more, if that other person will use the credit to provide goods or services in the energy sector in Iran and is identified on the current list of persons engaged in investment activities in Iran created by DGS; or b) demonstrate it has been exempted from the certification requirement for that solicitation or contract pursuant to Public Contract Code section 2203(c) or (d). The DGS list of entities prohibited from contracting with public entities in California per the Iranian Contracting Act, 2010, can be found at:
Department of General Services Procurement Division Iran Contracting Act List
(http://www.documents.dgs.ca.gov/PD/poliproc/Iran%20Contracting%20Act%20List.pdf)

To comply with this requirement, please insert your vendor or financial institution name and Federal ID Number (if available) and complete **one** of the options below. Please note: California law establishes penalties for providing false certifications, including civil penalties equal to the greater of $250,000 or twice the amount of the contract for which the false certification was made; contract termination; and three-year ineligibility to bid on contracts. (Public Contract Code section 2205.)

OPTION #1 - CERTIFICATION

I, the official named below, certify I am duly authorized to execute this certification on behalf of the vendor/financial institution identified below, and the vendor/financial institution identified below is **not** on the current list of persons engaged in investment activities in Iran created by DGS and is not a financial institution extending twenty million dollars ($20,000,000) or more in credit to another person/vendor, for 45 days or more, if that other person/vendor will use the credit to provide goods or services in the energy sector in Iran and is identified on the current list of persons engaged in investment activities in Iran created by DGS.

Vendor Name/Financial Institution (Printed)	*Federal ID Number (or n/a)*
By (Authorized Signature)	Date
Printed Name and Title of Person Signing	

OPTION #2 – EXEMPTION

Pursuant to Public Contract Code sections 2203(c) and (d), a public entity may permit a vendor/financial institution engaged in investment activities in Iran, on a case-by-case basis, to be eligible for, or to bid on, submit a proposal for, or enters into or renews, a contract for goods and services.

If you have obtained an exemption from the certification requirement under the Iran Contracting Act, please fill out the information below, and attach documentation demonstrating the exemption approval.

Vendor Name/Financial Institution (Printed)	*Federal ID Number (or n/a)*
By (Authorized Signature)	Date
Printed Name and Title of Person Signing	

California Levine Act Statement

California Levine Act Statement

California Government Code section 84308, commonly referred to as the "Levine Act," prohibits any officer of El Dorado County from participating in any action related to a contract if he or she accepts, solicits, or directs any political contributions totaling more than two hundred and fifty dollars ($250) within the previous twelve (12) months, and for twelve (12) months following the date a final decision concerning the contract has been made, from the person or company awarded the contract. The Levine Act also requires disclosure of such contribution by a party to be awarded a specific contract. An officer of El Dorado County includes the Board of Supervisors, any elected official, and the chief administrative officer (collectively "Officer"). It is the Contractor's responsibility to confirm the appropriate "Officer" and name the individual(s) in their disclosure.

Have you or your company, or any agent on behalf of you or your company, made any political contribution(s), or been solicited to make a contribution by an Officer or had an Officer direct you to make a contribution of more than $250 to an Officer of the County of El Dorado in the twelve months preceding the date of the submission of your proposals or the anticipated date of any Officer action related to this contract?

_____YES _____NO
If yes, please identify the person(s) by name:

Do you or your company, or any agency on behalf of you or your company, anticipate or plan to make any political contribution(s) of more than $250 to an Officer of the County of El Dorado in the twelve months following any Officer action related to this contract?

_____YES _____NO
If yes, please identify the person(s) by name:

Answering YES to either of the two questions above does not preclude the County of El Dorado from awarding a contract to your firm or any taking any subsequent action related to the contract. It does, however, preclude the identified Officer(s) from participating in any actions related to this contract.

Date	Signature of authorized individual
Type or write name of company	Type or write name of authorized individual

CONFIDENTIALITY OF INFORMATION PROVIDED

Contractor shall maintain the confidentiality and privileged nature of all records. Upon completion of all Services, ownership and title to all reports, documents, plans, maps, specifications, estimates, compilations and any and all other materials or data given to Contractor as part of the Services requested shall be returned to the County.

Signature: _____ Date: _____

Name: _____

Title: _____

Firm: _____

Accompanying this proposal is _____

(NOTICE: INSERT THE WORDS "CASH ($_____),"CASHIER'S CHECKS," "CERTIFIED CHECKS," OR "BIDDERS BONDS," AS THE CASE MAY BE)

in amount equal to at least ten percent (10%) of the total amount bid.

The names of all persons interested in the forgoing Proposal as principals are as follows:

IMPORTANT NOTICE: If the Bidder or other interested person is a corporation, state legal name of corporation and place of incorporation, also names of the president, secretary, treasurer, and executive officer thereof; if a partnership, state name of partnership, also names of all individual partners; if Bidder or other interested person is an individual, state first and last names in full.

_____

_____

_____

_____

Licensed in accordance with an act providing for the registration of Contractors,

License No. _____ Classification(s) _____

A copy of the afore-referenced license must be attached hereto.

ADDENDA: This Proposal is submitted with respect to the changes to the Contract included in addenda number(s)

_____

(Fill in addenda numbers if addenda have been received and insert, in this Proposal, any Proposal Pay Items and Bid Price Schedules that were received as part of the addenda)

By my signature on this Proposal I certify, under penalty of perjury under the laws of the State of California, that the foregoing questionnaire and statements of Public Contract Code Sections 10162, 10232, and 10285.1 are true and correct and that I have complied with the requirements of Section 8103 of the Fair Employment and Housing Commission Regulations (Chapter 5 of Division 4 of Title 2 of the California Code of Regulations). By my signature on this Proposal I further certify, under penalty of perjury under the laws of the State of California and the United States of America that the Noncollusion Affidavit required by Title 23 United States Code, Section 112 and Public Contract Code Section 7106 is true and correct.

The person or persons executing this Proposal on behalf of a corporation or partnership shall be prepared to demonstrate by resolution, article, or otherwise, that such person is or that such persons are appropriately authorized to act in these regards for such corporation or partnership. Such authority shall be demonstrated to the satisfaction of the County of El Dorado.

If the signature is by an agent other than an officer of a corporation or a member of a partnership, a power of attorney authorizing said act by the agent on behalf of his principal shall be submitted with the bid forms; otherwise, the bid may be disregarded as irregular and unauthorized.

The Bidder's execution on the signature portion of this Proposal shall constitute an endorsement and execution of those affidavits, declarations and certifications which are part of this Proposal.

Executed this _____ day of _____, 20__

at: _____ County, State of _____

Date: _____

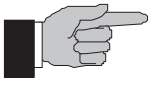

SIGN HERE: _____

Name and Title of Bidder: _____

Name of Firm: _____

END OF PROPOSAL

COUNTY OF EL DORADO

BIDDER'S BOND

this form MUST be used

KNOW ALL PEOPLE BY THESE PRESENTS, THAT WE _____

_____, as **PRINCIPAL**, and

_____

_____

as Surety are held and firmly bound unto the County of El Dorado (Obligee), in the penal sum of **TEN (10) PERCENT OF THE AMOUNT OF THE TOTAL LUMP SUM BID PRICE** of the Principal above named, submitted by said Principal to the Obligee for the work described below, for the payment of which sum in lawful money of the United States, well and truly to be made to the Obligee, we the Principal and Surety bind ourselves, our heirs, executors, administrators and successors, jointly and severally, firmly by these presents. In no case shall the liability of the Surety hereunder exceed the sum of

TEN PERCENT (10%) OF THE AMOUNT OF THE TOTAL LUMP SUM BID PRICE

THE CONDITION OF THIS OBLIGATION IS SUCH, THAT:

WHEREAS, the Principal has submitted the above-mentioned Bid to the Obligee, as aforesaid, for certain construction specifically described as follows, for which bids are to be opened at Placerville, El Dorado County, California, for the construction of the:

UNION MINE WASTEWATER TREATMENT FACILITY
HEADWORKS CONSTRUCTION PROJECT
BID #24-0056

NOW, THEREFORE, if the aforesaid Principal is awarded the Contract and, within the time and manner required under the Contract Documents, after the prescribed forms are presented to it for signature, enters into a written contract, in the prescribed form, in accordance with the Bid, and files two bonds with the County of El Dorado, one to guarantee faithful performance and the other to guarantee payment for labor and materials, as required by law, then this obligation shall be null and void; otherwise, it shall remain in full force and virtue.

In the event suit is brought upon this bond by the Obligee and judgment is recovered, the Surety shall pay all costs incurred by the Obligee in such suit, including a reasonable attorney's fee to be fixed by the Court.

IN WITNESS WHEREOF, we have set our hands and seals on this _____ day of _____ 20____

(seal) _____
Principal

_____

(seal) _____
Surety

Address: _____

_____

(NOTE: Signature of those executing for the Surety shall be properly acknowledged, and accompanied by a Certificate of Acknowledgment.)

PRINCIPAL

A notary public or other officer completing this certificate verifies only the identity of the individual who signed the document to which this certificate is attached, and not the truthfulness, accuracy, or validity of that document.

ACKNOWLEDGMENT

State of California

County of _____

On _____ before me, _____,
(here insert name and title of the officer)

personally appeared _____

_____

_____ ,

who proved to me on the basis of satisfactory evidence to be the person(s) whose name(s) is/are subscribed to the within instrument and acknowledged to me that he/she/they executed the same in his/her/their authorized capacity(ies), and that by his/her/their signature(s) on the instrument the person(s), or the entity upon behalf of which the person(s) acted, executed the instrument.

I certify under PENALTY OF PERJURY under the laws of the State of California that the foregoing paragraph is true and correct

WITNESS my hand and official seal.

Signature _____

(Seal)

SURETY

A notary public or other officer completing this certificate verifies only the identity of the individual who signed the document to which this certificate is attached, and not the truthfulness, accuracy, or validity of that document.

ACKNOWLEDGMENT

State of California

County of _____

On _____ before me, _____,
(here insert name and title of the officer)

personally appeared _____

_____

_____ ,

who proved to me on the basis of satisfactory evidence to be the person(s) whose name(s) is/are subscribed to the within instrument and acknowledged to me that he/she/they executed the same in his/her/their authorized capacity(ies), and that by his/her/their signature(s) on the instrument the person(s), or the entity upon behalf of which the person(s) acted, executed the instrument.

I certify under PENALTY OF PERJURY under the laws of the State of California that the foregoing paragraph is true and correct.

WITNESS my hand and official seal.

Signature _____

(Seal)

County of El Dorado

BID #24-0056

UNION MINE WASTEWATER TREATMENT FACILITY HEADWORKS CONSTRUCTION PROJECT

THIS AGREEMENT ("Agreement") approved by the County of El Dorado Board of Supervisors, this _____ day of _____, in the year of 2024, made and concluded, in duplicate, between the **COUNTY OF EL DORADO**, a political subdivision of the State of California, by the Environmental Management Department thereof, the party of the first part hereinafter called "County," and **(CONTRACTOR)** party of the second part hereinafter called "Contractor."

R E C I T A L S

WHEREAS, County has caused the above-captioned project to be let to formal bidding process; and

WHEREAS, Contractor has duly submitted a bid response for the captioned project upon which County has awarded this Contract.

NOW, THEREFORE, the parties hereto have mutually covenanted and agreed, and by these presents do covenant and agree, each with the other, as follows:

Article 1. THE WORK

The improvement contemplated in the performance of this Contract is an improvement over which the County of El Dorado shall exercise general supervision. The County therefore, shall have the right, but not the duty to assume full and direct control over this Contract whenever the County at its sole discretion, shall determine that its responsibility is so required.

The Contractor shall complete the Work as specified or indicated under the County's Contract Documents entitled:

UNION MINE WASTERWATER TREATMENT FACILITY HEADWORKS CONSTRUCTION PROJECT

The project is located at 5700 Union Mine Road, El Dorado, California 95623. The Work to be done as described in the Project Specifications, and Project Drawings, generally consists of, but is not limited to: furnishing of all labor, materials, and equipment for the headworks construction project at the Union Mine Wastewater Treatment Facility. The Work shall include:

Construction and renovation of a new receiving station "headworks" for the Union Mine Wastewater Treatment Facility, including screening and grit removal. Services shall include at a minimum: project meetings, safety plans, product handling, equipment installation, disinfection of water lines, testing of pipelines/gravity sewer lines and manholes, earthwork, dewatering, trenching, backfilling, utility line marking, vegetative erosion control, stormwater runoff control, paving, concrete work, piping, pump work, electrical work, grounding, instrumentation, equipment and system testing and start up, painting and finish, and site restoration. For additional scope of work information, see the Project Specifications and Project Drawings. Should Bidder find relevant details missing from the original Project Specifications and Project Drawings, Bidder shall alert the County.

DRAFT

Article 2. CONTRACT DOCUMENTS

The Contract Documents consist of: the Notice to Bidders; Instructions to Bidders; the bid forms which include the accepted Proposal, Proposal Bid Price Schedule, Substitutions Listing, Subcontractors Listing, Section 10285.1 Statement, Section 10162 Questionnaire, Section 10232 Statement, Non-collusion Affidavit, Iran Contracting Act Verification Form, California Levine Act Statement, and the Confidentiality of Information Provided; the Contract which includes this Agreement with any Exhibits thereto, the Performance Bond and Payment Bond; Conditions of the Contract; All Exhibits and Attachments to the Bid; all Addenda incorporated in those documents before their execution, all Contract Change Orders, Architect's Supplemental Instructions if applicable, and Construction Change Directives issued in accordance with the Contract Documents which may be delivered or issued after the Effective Date of this Agreement and are not attached hereto; the prevailing Labor Surcharge And Equipment Rental Rates (when required) as determined by the Department of Industrial Relations to be in effect on the date the Work is accomplished; all the obligations of County and of Contractor which are fully set forth and described therein; and all Contract Documents which are hereby specifically referred to and by such reference made a part hereof. All Contract Documents are intended to cooperate so that any work called for in one and not mentioned in the other is to be executed the same as if mentioned in all Contract Documents. Contractor agrees to perform all of its promises, covenants, and conditions set forth in the Contract Documents, and to abide by and perform all terms and conditions set forth therein. In case of conflict between this Agreement and any other contract document, this Agreement shall take precedence.

Article 3. CONTRACT PRICE

As compensation agreed upon for said Work, County shall pay or cause to be paid to Contractor, in full, and for the full contract price and compensation for said completion of the Work, including without limitation, all bonds and insurance, THE NOT TO EXCEED SUM OF (insert dollar amount in words) DOLLARS ($(insert dollar amount in numbers)) which sum constitutes the Contract Price for the complete Project (the "Contract Price").

Article 4. COMMENCEMENT AND COMPLETION

The Work to be performed under this Contract shall commence on the date specified in the Notice to Proceed issued by County. The work shall be diligently prosecuted to completion within **two (2) years** commencing from the date shown on the Contractor Notice to Proceed.

County and Contractor recognize that time is of the essence of the Agreement and that County will suffer loss if the Work is not completed within the time specified in the above paragraph, plus any extensions thereof allowed in accordance with Article 4.3.5 of the Conditions of the Contract. The parties also recognize delays, expense, and difficulties involved with proving in a legal proceeding the actual loss suffered by County if the Work is not completed on time. Accordingly, instead of requiring any such proof, County and Contractor agree that as liquidated damages for delay (but not as a penalty), Contractor shall pay County the sum of **SIX HUNDRED DOLLARS AND ZERO CENTS ($600.00)** for each and every calendar day, as liquidated damages and not as a penalty, for each and every calendar day's delay in finishing the Work in excess of the contract time prescribed herein; and Contractor agrees that County may deduct the amount thereof from any monies due or that may become due Contractor under this contract.

Article 5. PAYMENT

Payment shall be made to Contractor as follows:

Progress payments are to be made monthly based on the percentage of completion method reached by the Contractor and invoiced using Exhibit A, marked "Application and Certificate for Payment," incorporated herein and made by reference a part hereof.

Retention of 5% of the total Contract price will be held until the work is 50% complete, and thereafter at the option of County. Payment by County as herein provided shall not be construed as an absolute acceptance of defects in the work or improper materials.

County shall promptly pay Contractor in accordance with Public Contract Code section 20104.50.

Article 6. SAFETY

Contractor shall maintain safe conditions at the jobsite for the duration of the Work for the public, County staff, and all persons performing the Work. Contractor shall comply fully with all laws, orders, citations, rules, regulations, standards, and statutes with respect to occupational health and safety, the handling and storage of hazardous materials, accident prevention, safety equipment and practices. Contractor shall be solely responsible for providing a safe place to work for its employees and for employees of its subcontractors and suppliers or material and equipment, for adequacy of and required use of all safety equipment, and for full compliance with aforesaid laws, orders, citations, rules, regulations, standards, and statutes.

Other safety measures shall include, but not be limited to the following:

A. Providing safe accessibility to all building entrances, keeping all sidewalks, active doors, corridors or other walkways, driveways, or any emergency vehicle access clear for the duration of the project.

B. Keeping flammable rags, if applicable, in a sealed container and removing them from the site at the end of each work day.

Article 7. PROTECTION OF FACILITIES

A. Contractor shall exercise care to prevent damage to the existing building, grounds, and property while performing the Work. Any damage caused as a result of Contractor's operations shall be repaired back to its original condition by Contractor at no additional cost to County.

B. Contractor shall provide for public use, and shall limit access to the facility as directed by County's Contract Administrator.

C. Contractor shall provide for work by other contractors and County.

D. Contractor shall coordinate the use of the premises, including the storage of materials, tools, and equipment with County's Contract Administrator.

Article 8. INDEMNITY

To the fullest extent allowed by law, Contractor shall defend, indemnify, and hold the County and its officers, directors, and employees harmless against and from any and all claims, suits, losses, damages, and liability for damages, including attorney's fees and other costs of defense brought for or on account of injuries to or death of any person, including but not limited to, workers and the public, or on account of injuries to or death of County employees, or damage to property, or any economic, consequential or special damages which are claimed or which shall in any way arise out of or be connected with Contractor's services, operations or performance hereunder, regardless of the existence or degree of fault or negligence on the part of the County, the Contractor, subcontractors or employees of any of these, except for the sole negligence or willful acts of the County, its officers and employees, or where expressly prescribed by statute.

The duty to indemnify and hold harmless the County specifically includes the duties to defend set forth in Civil Code section 2778. The insurance obligations of the Contractor are separate, independent obligations under the Contract Documents, and the provisions of this defense and indemnity are not intended to modify nor should they be construed as modifying or in any way limiting the insurance obligations set forth in the Contract Documents.

Nothing herein shall be construed to seek indemnity in excess of that permitted by Civil Code section 2782, et seq. In the event any portion of this Article is found invalid, the Parties agree that this Article shall survive and be interpreted consistent with the provisions of Civil Code section 2782, et seq.

DRAFT

Article 9. GUARANTEES

Contractor shall repair or replace any or all work provided hereunder which is defective due to faulty materials, poor workmanship, or defective equipment at no expense to County, ordinary wear or tear and unusual abuse or neglect excepted, during the term of the Contract and for a period of one (1) year after Notice of Acceptance. Contractor shall be required to repair or replace any and all adjacent facilities or areas which have been damaged or displaced due to Contractor work performed under this Agreement at no expense to County during the term of this Contract and for a period of one (1) year after Notice of Acceptance.

If a warranty or guarantee exceeding one (1) year is provided by the supplier or manufacturer of any equipment or materials used in this Project, or if a warranty or guarantee exceeding one (1) year is required elsewhere in these Contract Documents, then the guarantee for such equipment or materials shall be extended for such term. Contractor expressly agrees to act as co-guarantor of such equipment and materials, and Contractor shall supply County with all warranty and guaranty documents relative to equipment and materials incorporated in the job and guaranteed by its suppliers or manufacturers.

The parties agree that this guarantee and the rights and obligations accruing therefrom shall be in addition to, and not by way of limitation in any manner whatsoever to, the rights, obligations, warranties or remedies otherwise provided for by law.

In the event of Contractor's failure to comply with the above mentioned conditions within ten (10) calendar days after being notified in writing by County, Contractor hereby authorizes County to proceed to have said defects repaired and made good at Contractor's expense, and Contractor will honor and pay all costs and charges therefore upon written demand.

Article 10. NOTICE

Any notice or other correspondence required to be given under this Agreement by either party to the other may be affected by personal delivery in writing or by mail, postage prepaid. Notices personally delivered during normal business hours shall be deemed received on the actual date of delivery; mailed notices shall be deemed received one (1) day after affixed postmark. Notices and correspondence to County shall be in duplicate and shall be delivered to it as follows:

To County:

County of El Dorado
Environmental Management Department
2850 Fairlane Court
Placerville, California 95667

Attn.: Jeffrey Warren
Director

With a copy to:

County of El Dorado
Chief Administrative Office
Procurement and Contracts Division
330 Fair Lane
Placerville, California 95667

Attn.: Michele Weimer
Procurement and Contracts Manager

Notices and correspondence to Contractor shall be delivered when personally delivered to, or if mailed, addressed to Contractor at:

Contractor's Business Name
Street Address
City, State Zip

Attn.: Name of Notices Recipient
Title of Notices Recipient

Either party may change its address for notices by giving written notice pursuant to this Article.

DRAFT

Article 11. CALIFORNIA FORUM AND LAW

Any dispute resolution action arising out of this Agreement, including, but not limited to, litigation, mediation, or arbitration, shall be brought in El Dorado County, California, and shall be resolved in accordance with the laws of the State of California.

Article 12. PERFORMANCE BOND

As a part of the execution of this Contract, Contractor shall furnish a bond of a surety company authorized to do business in the State of California, conditioned upon the faithful performance of all covenants and stipulations under this Contract. The amount of this bond shall be one hundred percent (100%) of the total Contract Price and shall be executed upon the form provided by County.

Article 13. PAYMENT BOND

As a part of the execution of this Contract, Contractor shall furnish a bond of a surety company authorized to do business in the State of California, conditioned upon the payment in full of all claims for labor and materials in accordance with the provisions of the law of the State of California. The amount of this bond shall be one hundred percent (100%) of the total Contract Price and shall be executed upon the form provided by County.

Article 14. NOTIFICATION OF SURETY COMPANY

The surety company shall familiarize itself with all of the conditions and provisions of this Contract, and shall waive the right of special notification of any change or modifications of this Contract or extension of time, or of decreased or increased work, or of the cancellation of the Contract, or of any other act or acts by County or its authorized agents, under the terms of this Contract; and failure to so notify the aforesaid surety company of changes shall in no way relieve the surety company of its obligation under this Contract.

Article 15. ASSIGNMENT OF ANTITRUST ACTIONS

In entering into a public works contract or a subcontract to supply goods, services, or materials pursuant to a public works contract, the Contractor offers and agrees and will require all of its subcontractors and suppliers to agree to assign to the awarding body all rights, title, and interest in and to all causes of action it may have under section 4 of the Clayton Act (15 U.S.C. section 15) or under the Cartwright Act (Business and Professions Code section 16700, et seq.), arising from purchases of goods, services, or materials pursuant to the public works contract or the subcontract. This assignment shall be made and become effective at the time the awarding body tenders final payment to Contractor, without further acknowledgment by the parties.

If an awarding body or public purchasing body receives, either through judgment or settlement, a monetary recovery for a cause of action assigned under Government Code sections 4550-4554, the assignor shall be entitled to receive reimbursement for actual legal costs incurred and may, upon demand, recover from the public body any portion of the recovery, including treble damages, attributable to overcharges that were paid by the assignor but were not paid by the public body as part of the bid price, less the expenses incurred in obtaining that portion of the recovery. Upon demand in writing by the assignor, the assignee shall, within one year from such demand, reassign the cause of action assigned under Government Code sections 4550-4554 if the assignor has been or may have been injured by the violation of law for which the cause of action arose and (a) the assignee has not been injured thereby, or (b) the assignee declines to file a court action for the cause of action.

Article 16. TERMINATION BY COUNTY FOR CONVENIENCE

County reserves the right to terminate the Contract at any time upon determination by County's representative that termination of the Contract is in the best interest of County. County shall issue Contractor a written notice specifying that the Contract is to be terminated.

DRAFT

Upon receipt of said written notice, Contractor shall stop all work under the Contract except: (1) work specifically directed to be completed prior to termination, (2) work the County deems necessary to secure the project for termination, (3) removal of equipment and plant from the site of the Work, (4) action that is necessary to protect materials from damage, (5) disposal of materials not yet used in the Work as directed by County, and (6) clean-up of the site.

If the Contract is terminated for County's convenience as provided herein, all finished or unfinished work and materials previously paid for shall, at the option of County, become its property. Contractor shall be paid an amount which reflects costs incurred for work provided to the date of notification of termination. In addition, Contractor shall be paid the reasonable cost, as solely judged by County, and without profit, for all work performed to secure the project for termination.

Article 17. TERMINATION BY COUNTY FOR CAUSE

If Contractor is adjudged as bankrupt or insolvent, or makes a general assignment for the benefit of its creditors or if a trustee or receiver is appointed for Contractor or for any of its property, or if Contractor files a petition to take advantage of any debtor's act, or to reorganize under the bankruptcy or applicable laws, or on more than one occasion fails to supply sufficient skilled workmen or suitable material or equipment, or on more than one occasion fails to make prompt payments to subcontractors for labor, materials, or equipment, or disregards the authority of the County's representative, or the Engineer, if one is appointed, or otherwise violates any provision of the Contract Documents, then County may, without prejudice to any other right or remedy and after giving Contractor and its Surety a minimum of ten (10) calendar days from delivery of a written termination notice, terminate the services of Contractor and take equipment and machinery thereon owned by Contractor and finish the Work by whatever method County may deem expedient. In such case, Contractor shall not be entitled to receive any further payment until the Work is finished.

Without prejudice to other rights or remedies County may have, if Contractor fails to begin delivery of materials and equipment, to commence Work within the time specified, to maintain the rate of delivery of material, to execute the Work in the manner and at such locations as specified, or fails to maintain a work program which will ensure County's interest, or, if Contractor is not carrying out the intent of the Contract, an Inspector's written notice may be served upon Contractor and the Surety on its faithful performance bond demanding satisfactory compliance with the Contract. If Contractor or its Surety does not comply with such notice within five (5) calendar days after receiving it, or after starting to comply, fails to continue, County may exclude it from the premises and take possession of all material and equipment, and complete the Work by County's own forces, by letting the unfinished Work to another Contractor, or by a combination of such methods.

Where Contractor's services have been so terminated by County, said termination shall not affect any right of County against Contractor then existing or which may thereafter accrue. Any retention or payment of monies by County due Contractor will not release Contractor from compliance with the Contract Documents.

If the unpaid balance of the Contract price exceeds the direct and indirect costs of completing the Work, including compensation for additional professional services, such excess shall be paid to Contractor. If the sums under the Contract are insufficient for completion, Contractor or Surety shall pay to County within five (5) calendar days after the completion, all costs in excess of the Contract price. In any event, the cost of completing the Work shall be charged against Contractor and its Surety and may be deducted from any money due or becoming due from County.

The provisions of this Article shall be in addition to all other rights and remedies available to County under law.

If after notice of termination, it is determined for any reason that Contractor was not in default, the rights and obligations of the parties shall be the same as if the notice of termination had not been issued. The Contract shall be equitably adjusted to compensate for such termination.

Article 18. SUCCESSORS AND ASSIGNS

This Agreement shall bind and inure to the heirs, devisees, assignees, and successors in interest of Contractor and to the successors in interest of County in the same manner as if such parties had been expressly named herein.

DRAFT

Article 19. RELOCATION OF UTILITIES

As required by Government Code section 4215, County will assume responsibility for the removal, relocation, and protection of main or trunk-line utility facilities existing on the construction site, if such facilities are not shown in the plans and specifications, and County shall compensate Contractor for the costs of locating and repairing damage to such facilities not due to the failure of Contractor to exercise reasonable care.

Nothing herein shall be deemed to require County to indicate the presence of existing service laterals or appurtenances whenever the presence of such utilities on the site of the construction project can be inferred from the presence of other visible facilities, such as buildings, meter, and junction boxes, on or adjacent to the site of the construction.

If Contractor, while performing the Work under this Agreement, discovers utility facilities not identified in the Contract Documents, including the plans or specifications, Contractor shall immediately notify the Contract Administrator or Project Manager. County shall not be liable for Contractor's performance of unauthorized work.

Article 20. REPORTING ACCIDENTS

Contractor shall prepare and submit (within 24 hours of such incidents) reports of accidents at the site and anywhere else the work is in progress in which bodily injury is sustained or property loss in excess of Five Hundred Dollars ($500.00) occurs.

Article 21. EMISSIONS REDUCTION

Contractor and its subcontractors shall at all times have valid Certificates of Reported Compliance as described in 13 California Code of Regulations section 2449(n) for fleets of vehicles subject to 13 California Code of Regulations section 2449 which may be used in performance
of the contract. No such vehicle is permitted onsite unless and until Contractor provides County with a valid Certificate of Reported compliance.

Contractor and its subcontractors shall comply with emission reduction regulations mandated by the California Air Resources Board, and sign a certification of knowledge thereof:

CERTIFICATE OF KNOWLEDGE – EMISSIONS REDUCTION REGULATIONS

I am aware of the emissions reduction regulations being mandated by the California Air Resources Board (CARB). I will comply with such regulations before commencing the performance of the Work and maintain compliance throughout the duration of this Contract.

Signed: _____Date_____

Contractor shall indemnify County against any fines or penalties imposed by CARB or any other governmental or regulatory agency for violations of applicable laws, rules, and regulations by Contractor, its subcontractors, or others for whom Contractor is responsible under its indemnity obligations provided for in this Agreement.

Article 22. WORKERS' COMPENSATION CERTIFICATION

Contractor shall comply with Labor Code section 3700, et seq., requiring it to obtain Workers' Compensation Insurance, and sign a certificate of knowledge thereof.

DRAFT

CERTIFICATE OF KNOWLEDGE - LABOR CODE SECTION 3700

I am aware of the provisions of section 3700 of the Labor Code, which require every employer to be insured against liability for workers' compensation or to undertake self-insurance in accordance with the provisions of that Code, and I will comply with such provisions before commencing the performance of work of this Contract.

Signed: _____ Date: _____

Article 23. WARRANTY

Contractor warrants to County that materials and equipment furnished for the Work will be of good quality and new, unless otherwise required or permitted under the Contract Documents, that the Work will be free from defects or flaws and is of the highest quality of workmanship and that the Work will conform with the requirements herein. Work not conforming to these requirements, including substitutions not properly approved and authorized, shall be considered defective.

Article 24. RESOLUTION OF CLAIMS

Contractor's attention is directed to California Public Contract Code section 9204, which describes procedures for the resolution of claims on public works projects. Among other things, section 9204 requires the claimant to furnish reasonable documentation to support a claim, requires the public entity to respond to the claim within forty-five (45) days of receipt of the claim, and allows for the claimant to demand an informal meet and confer conference for settlement of the issues in dispute. For any portion of a claim that remains in dispute, section 9204 requires submission of the claim to nonbinding mediation. Additionally, section 9204 requires the public entity to make any payment due on an undisputed portion of the claim within sixty (60) days of the public entity's written response and to pay interest at the rate of seven percent (7%) per annum on any amounts not paid in a timely manner. The provisions of sections 20104, et seq. also apply to the resolution of claims under this Contract to the extent those sections are not in conflict with section 9204.

Article 25. APPRENTICES

25.1 For purposes of this Article 25, the term Subcontractor shall not include suppliers, manufacturers, and distributors.

25.2 Only apprentices, as defined in the State of California Labor Code section 3077, who are in training under apprenticeship standards and written apprentice agreements under Chapter 4, Division 3, of the State of California Labor Code, are eligible to be employed by Contractor and Subcontractors as apprentices. The employment and training of each apprentice shall be in accordance with the provisions of the apprenticeship standards and written apprentice agreements under which the apprentice is training and in accordance with prevailing wage law pursuant to the Labor Code, including but not limited to section 1777.5. The Contractor bears responsibility for compliance with this section for all apprenticeable occupations.

25.3 Every apprentice shall be paid the standard wage to apprentices, under the regulations of the craft or trade at which the apprentice is employed, and shall be employed only at the Work in the craft or trade to which the apprentice is indentured.

25.4 When Contractor or Subcontractors employ workers in any apprenticeship craft or trade on the Work, Contractor or Subcontractors shall 1) send contract award information to the applicable joint apprenticeship committee that can supply apprentices to the site of the public work and 2) apply to the joint apprenticeship committee, which administers the apprenticeship standards of the craft or trade in the area of the Project site, for a certificate approving Contractor or Subcontractors under the apprenticeship standards for the employment and training of apprentices in the area of the Project site. The committee will issue a certificate fixing the number of apprentices or the ratio of apprentices to journeypersons who shall be employed in the craft or trade on the Work. The ratio will not exceed that stipulated in the apprenticeship standards under which the joint apprenticeship committee operates; but in no case shall the ratio be less than 1 hour of **apprentice** work for every 5 hours of journeyperson work, except as permitted by law. Contractor or Subcontractors shall, upon the issuance of the approval certificate in each such craft or trade, employ the number of apprentices or the ratio of apprentices to journeypersons fixed in the certificate issued by the joint apprenticeship committee or present an exemption certificate issued by the Division of Apprenticeship Standards.

DRAFT

25.5 "Apprenticeship craft or trade," as used in this Article 25, shall mean a craft or trade determined as an apprenticeship occupation in accordance with rules and regulations prescribed by the Apprenticeship Council.

25.6 If Contractor or Subcontractors employ journeyworkers or apprentices in any apprenticeship craft or trade in the area of the Project site, and there exists a fund for assisting to allay the cost of the apprenticeship program in the trade or craft, to which fund or funds other contractors in the area of the Project site are contributing, Contractor and Subcontractors shall contribute to the fund or funds in each craft or trade in which they employ journeyworkers or apprentices on the Work in the same amount or upon the same basis and in the same manner done by the other contractors. Contractor may include the amount of such contributions in computing its bid for the Contract; but if Contractor fails to do so, it shall not be entitled to any additional compensation therefor from County.

25.7 In the event Contractor willfully fails to comply with this Article 25, it will be considered in violation of the requirements of the Contract.

25.8 Nothing contained herein shall be considered or interpreted as prohibiting or preventing the hiring by Contractor or Subcontractors of journeyworker trainees who may receive on-the-job training to enable them to achieve journeyworker status in any craft or trade under standards other than those set forth for apprentices.

Article 26. RETAINAGE

The retainage from payments is set forth in Section 6.4 "WITHHOLDINGS FROM PAYMENTS" of the Conditions of the Contract. Contractor may elect to receive one hundred percent (100%) of payments due as set forth in the Contract Documents, without retention, by depositing securities of equivalent value with County, in accordance with, and as set forth in section 22300 of the Public Contract Code. Securities eligible for deposit hereunder shall be limited to those listed in Government Code section 16430, or bank or savings and loan certificates of deposit.

Article 27. PREVAILING WAGE REQUIREMENTS

In accordance with the provisions of California Labor Code section 1770, et seq., the general prevailing rate of wages in the county in which the Work is to be done has been determined by the Director of the California Department of Industrial Relations. Interested parties can obtain the current wage information by submitting their requests to the Department of Industrial Relations, Division of Labor Statistics and Research, P.O. Box 420603, San Francisco, CA 94142-0603, Telephone (415) 703-4708 or by referring to the website at http://www.dir.ca.gov/dlsr/PWD. The rates at the time of the bid advertisement date of a project will remain in effect for the life of the project in accordance with the California Code of Regulations, as modified and effective January 27, 1997.

The prevailing wage rates that were in effect at the time of the bid closing are attached to this Agreement for the Contractor's records. Copies of the general prevailing rate of wages in the county in which the Work is to be done are also on file at the Environmental Management Department and are available upon request.

In accordance with the provisions of Labor Code section 1810, eight (8) hours of labor shall constitute a legal day's work upon all work done hereunder, and Contractor and any subcontractor employed under this Contract shall conform to and be bound by the provisions of Labor Code sections 1810 through 1815.

Article 28. CERTIFIED PAYROLL

As required under the provisions of Labor Code section 1776, Contractor and any subcontractors shall keep accurate payroll records as follows:

28.1. The payroll records shall show the name, address, social security number, work classification, straight time and overtime hours worked each day and week, and the actual per diem wages paid to each journeyman, apprentice, worker, or other employee employed by Contractor or subcontractors in connection with this Project.

DRAFT

28.2 A certified copy of all payroll records enumerated above shall be available for inspection at all reasonable hours at the principal office of Contractor as follows:

a. Make available or furnish to the employee or his or her authorized representative on request.

b. Make available for inspection or furnished upon request to a representative of County, the State Division of Labor Standards Enforcement, and the Division of Apprenticeship Standards of the State Department of Industrial Relations.

c. Make available upon request by the public for inspection or copies thereof made; provided, however, that a request by the public shall be made through either County, the State Division of Labor Standards Enforcement, or the State Division of Apprenticeship Standards. The requesting party shall, prior to being provided the records, reimburse the costs of preparation by Contractor, subcontractor, and the entity through which the request was made. The public shall not be given access to the records at the principal office of Contractor.

d. All contractors and subcontractors must furnish electronic certified payroll records directly to the Department of Industrial Relations.

Article 29. NON-DISCRIMINATION

29.1. County may require Contractor's services on projects involving funding from various state and/or federal agencies, and as a consequence, Contractor shall comply with all applicable nondiscrimination statutes and regulations during the performance of this Agreement including but not limited to the following: Contractor and its employees and representatives shall not unlawfully discriminate against any employee or applicant for employment because of race, religion, color, national origin, ancestry, physical handicap, mental disability, medical condition, genetic information, military or veteran status, marital status, age, gender, gender identity, gender expression, sexual orientation, or sex; Contractor shall, unless exempt, comply with the applicable provisions of the Fair Employment and Housing Act (Government Code section 12900, et seq.) and applicable regulations promulgated thereunder (2 California Code of Regulations section 11000, et seq.); the applicable regulations of the Fair Employment and Housing Commission implementing Government Code section 12990, set forth in Subchapter 5 Chapter 5 of Division 4.1 of Title 2 of the California Code of Regulations incorporated into this Agreement by reference and made a part hereof as if set forth in full; and Title VI of the Civil Rights Act of 1964, as amended. Contractor and its employees and representatives shall give written notice of their obligations under this clause as required by law.

29.2. Where applicable, Contractor shall include these nondiscrimination and compliance provisions in any of its agreements that affect or are related to the services performed herein.

29.3. Contractor's signature shall provide any certifications necessary under the federal laws, the laws of the State of California, including but not limited to Government Code section 12990 and 2 California Code of Regulations section 11102.

Article 30. CONFLICT OF INTEREST

The parties to this Agreement have read and are aware of the provisions of Government Code section 1090, et seq. and the Political Reform Act of 1974 (section 87100, et seq.), relating to conflict of interest of public officers and employees. Individuals who are working for Contractor and performing work for County and who are considered to be consultant within the meaning of 2 California Code of Regulations section 18700.3, as it now reads or may thereafter be amended, are required to file a statement of economic interest in accordance with County's Conflict of Interest Code. County's Contract Administrator shall at the time this Agreement is executed make an initial determination whether or not the individuals who will provide services or perform work pursuant to this Agreement are consultants within the meaning of the Political Reform Act and County's Conflict of Interest Code. Statements of economic interests are public records subject to disclosure under the California Public Records Act.

Contractor covenants that during the term of this Agreement neither it, nor any officer or employee of the Contractor, has or shall acquire any interest, directly or indirectly, in any of the following:

1. Any other contract connected with, or directly affected by, the services to be performed by this Agreement.

2. Any other entities connected with, or directly affected by, the services to be performed by this Agreement.

3. Any officer or employee of County that are involved in this Agreement.

If Contractor becomes aware of a conflict of interest related to this Agreement, Contractor shall promptly notify County of the existence of that conflict, and County may, in its sole discretion, immediately terminate this Agreement by giving written notice of termination specified in Article 17.

Pursuant to Government Code section 84308 (SB 1439, the Levine Act), Contractor shall complete and sign the attached Exhibit B, marked "California Levine Act Statement," incorporated herein and made by reference a part hereof, regarding campaign contributions by Contractor, if any, to any officer of County.

Article 31. SUBCONTRACTORS

31.1 AWARD OF SUBCONTRACTS AND OTHER CONTRACTS FOR PORTIONS OF THE WORK

31.1.1 Unless otherwise stated in the Contract Documents, Contractor shall submit in writing, prior to entering into subcontract agreements, the names and addresses of all Subcontractors proposed for the Work that were not previously listed in Contractor's Bid. Where subcontractors are used, the provisions of Public Contract Code sections 4100-4114 apply to this Agreement.

31.1.2 Any Subcontractor may be disqualified if County or County's Representative determines that such Subcontractor fails to meet the requirements of the Contract Documents or for any other reason.

31.1.3 In accordance with the Subletting and Subcontracting Fair Practices Act, nothing herein shall be deemed to entitle Contractor, without the approval of County, to substitute other subcontractors for those named in Contractor's List of Subcontractors and List of Changes in Subcontractors Due to Alternates contained in the completed Bid Form; and, except with such approval, no such substitution shall be made.

31.1.4 Except as hereinafter provided, any increase in the cost of the Work resulting from the replacement or substitution of a Subcontractor, as required by County or County's Representative pursuant to Article 31.1.1 shall be borne solely by Contractor and Contractor shall not be entitled to any increase in Contract Sum or extension of Contract Time on account of such replacement or substitution.

31.2 SUBCONTRACTUAL RELATIONS

31.2.1 Any part of the Work performed for Contractor by a first-tier Subcontractor shall be pursuant to a written subcontract. Each such subcontract shall require the Subcontractor, to the extent of the Work to be performed by the Subcontractor, to be bound to Contractor by the terms of the Contract Documents, to assume toward Contractor all the obligations and responsibilities which Contractor assumes towards County by the Contract Documents, and to perform such portion of the Work in accordance with the Contract Documents. Each such subcontract shall preserve and protect the rights of County under the Contract Documents, with respect to the Work to be performed by Subcontractor, so that subcontracting thereof will not prejudice such rights. Contractor shall cause each such subcontract to expressly include the following requirements:

31.2.1.1 Subcontractor waives all rights that Subcontractor may have against County for damages caused by fire or other perils covered by builder's risk property insurance carried by Contractor or County.

31.2.1.2 County and entities and agencies designated by County will have access to and the right to audit and the right to copy at County's cost all of Subcontractor's books, records, contracts, correspondence, instructions, drawings, receipts, vouchers, purchase orders, and memoranda relating to the Work. Subcontractor shall preserve all such records and other items for a period of at least 3 years after Final Completion.

31.2.2 Upon the request of County, Contractor shall promptly furnish to County a true, complete, and executed copy of any subcontract.

Article 32. CONTRACTOR REGISTRATION

In accordance with Labor Code section 1771.1, a contractor or subcontractor shall not be qualified to bid on, be listed in a bid proposal, subject to the requirements of Public Contract Code section 4104, or engage in the performance of any contract for public work, as defined in this chapter, unless currently registered and qualified to perform public work pursuant to Labor Code section 1725.5. It is not a violation of this section for an unregistered contractor to submit a bid that is authorized by Business and Professions Code section 7029.1 or by Public Contract Code sections 10164 or 20103.5, provided the contractor is registered to perform public work pursuant to Labor Code section 1725.5 at the time the contract is awarded.

The contractor must post job site notices as prescribed by regulation 8 California Code of Regulations section 16451. All contractors and subcontractors must furnish electronic certified payroll records directly to the Department of Industrial Relations (DIR). The work is subject to compliance monitoring and enforcement by the DIR.

Article 33. AUDIT BY CALIFORNIA STATE AUDITOR

Audit by California State Auditor: Contractor acknowledges that if total compensation under this agreement is greater than $10,000, this Agreement is subject to examination and audit by the California State Auditor for a period of three (3) years, or for any longer period required by law, after final payment under this Agreement, pursuant to Government Code section 8546.7. In order to facilitate these potential examinations and audits, Contractor shall maintain, for a period of at least three (3) years, or for any longer period required by law, after final payment under the contract, all books, records and documentation necessary to demonstrate performance under the Agreement.

Article 34. TAXES

Contractor certifies that as of today's date, it is not in default on any unsecured property taxes or other taxes or fees owed by Contractor to County. Contractor agrees that it shall not default on any obligations to County during the term of this Agreement.

Article 35. CHILD SUPPORT COMPLIANCE ACT

For any Agreement in excess of $100,000.00, the Contractor acknowledges in accordance with Public Contract Code section 7110, that:

a) The Contractor recognizes the importance of child and family support obligations and shall fully comply with all applicable state and federal laws relating to child and family support enforcement, including, but not limited to, disclosure of information and compliance with earnings assignment orders, as provided in Chapter 8 (commencing with section 5200) of Part 5 of Division 9 of the Family Code; and

b) The Contractor, to the best of its knowledge is fully complying with the earnings assignment orders of all employees and is providing the names of all new employees to the New Hire Registry maintained by the California Employment Development Department.

Article 36. LICENSES

Contractor warrants and represents that it holds a valid California license pursuant to the Contractors' State License Law (Business and Professions Code section 7000, et seq.), that its license is in good standing and that it possesses a Class A – General Engineering Contractor's License as required by the categories and type of the Work. Copies of Contractor's State Contractors' license must be provided with this Agreement.

DRAFT

In addition, Contractor hereby represents and warrants that Contractor and any of its subcontractors employed under this Agreement has all the applicable licenses, permits, and certifications that are legally required for Contractor and its subcontractors to practice its profession or provide the services or work contemplated under this Agreement in the State of California. Contractor and its subcontractors shall obtain or maintain said applicable licenses, permits, or certificates in good standing throughout the term of this Agreement.

Article 37. BUSINESS LICENSE

The County Business License Ordinance provides that it is unlawful for any person to furnish supplies or services, or transact any kind of business in the unincorporated territory of El Dorado County without possessing a County business license unless exempt under County Ordinance Code section 5.08.070. Contractor warrants and represents that it shall comply with all of the requirements of the County Business License Ordinance, where applicable, prior to beginning work under this Contract and at all times during the term of this Contract.

Article 38. WAIVER

No failure on the part of the parties to exercise any rights under this Agreement, and no course of dealing with respect to any right hereunder shall operate as a waiver of that right, nor shall any single or partial exercise of any right preclude the exercise of any other right. The remedies herein provided are cumulative and are not exclusive of any other remedies provided by law.

Article 39. FORCE MAJEURE

Neither party will be liable for any delay, failure to perform, nor omission under this Agreement that is due to any cause that it is beyond its control, not due to its own negligence, and cannot be overcome by the exercise of due diligence. In that event, the affected party will:

39.1 Promptly give written notice to the other of the fact that it is unable to so perform and the cause(s) that is beyond its control.

39.2 Once the cause(s) has ceased, provide written notice to the other party and immediately resume its performance under this Agreement.

For purposes of this Article, "cause that is beyond its control" includes labor disturbances, riots, fires, earthquakes, floods, storms, lightning, epidemics, war, disorders, hostilities, expropriation or confiscation of properties, failure of and delays by carriers, interference by civil or military authorities, whether legal or de facto, and whether purporting to act under some constitution, decree, or law, or otherwise, or acts of God.

Article 40. DRUG-FREE WORKPLACE

Contractor shall comply with Government Code section 8355.

Article 41. CALIFORNIA RESIDENCY (Form 590)

If Contractor is a California resident, Contractor must file a State of California Form 590, certifying its California residency or, in the case of a limited liability company or corporation, certifying that it has a permanent place of business in California. Contractor will be required to submit a Form 590 prior to execution of this Agreement, or County shall withhold seven (7) percent of each payment made to Contractor during the term of this Agreement. This requirement applies to any agreement/contract exceeding $1,500.

DRAFT

Article 42. NONRESIDENT WITHHOLDING

If Contractor is not a California resident, Contractor shall provide documentation that the State of California has granted a withholding exemption or authorized reduced withholding prior to execution of this Agreement or County shall withhold seven (7%) percent of each payment made to the Contractor during term of the Agreement as required by law. This requirement applies to any agreement/contract exceeding $1,500.00. Contractor shall indemnify and hold County harmless for any action taken by the California Franchise Tax Board.

Article 43. COUNTY PAYEE DATA RECORD FORM

All independent contractors or corporations providing services to County who do not have a Department of the Treasury Internal Revenue Service Form W-9 (Form W-9) on file with County must file a County Payee Data Record Form with County.

Article 44. CONTRACTOR TO COUNTY

It is understood that the services provided under this Agreement shall be prepared in and with cooperation from County and its staff. It is further understood that this Agreement does not create an exclusive relationship between County and Contractor, and Contractor may perform similar work or services for others. However, Contractor shall not enter into any agreement with any other party or provide any information in any manner to any other party, that would conflict with Contractor's responsibilities or hinder Contractor's performance of services hereunder, unless County's Contract Administrator, in writing, authorizes that agreement or sharing of information.

Article 45. ASSIGNMENT AND DELEGATION

Contractor is engaged by County for its unique qualifications and skills as well as those of its personnel. Neither this Agreement, nor any part thereof, or any monies due or to become due hereunder, may be assigned by Contractor without the written approval of the County, nor without the consent of the Surety unless the Surety has waived its right to notice of assignment in writing .

Contractor shall not subcontract, delegate, or assign the Work to be performed, in whole or in part, to any other person or entitle without prior written consent of County.

Contractor covenants that if there is a change or transfer in ownership of Contractor's business prior to the completion of this Agreement, the new owner(s) shall be required under the terms of sale or other transfer document to assume Contractor's duties and obligations contained in this Contract and complete them to the satisfaction of County. Contractor further covenants that the terms of sale or other transfer document shall require notice be given to County of the change or transfer in ownership of Contractor's business within thirty (30) days of the effective date of the transfer. In the event of a sale or transfer of Contractor's business prior to the completion of this Agreement, County retains the right to terminate or cancel the contract as provided for herein, or to renegotiate the terms of the agreement, or to amend the existing Agreement.

Article 46. COMPLIANCE WITH APPLICABLE LAW

In the performance of this Contract, Contractor shall comply with all applicable Federal, State, and local laws, rules, regulations, ordinances, directives, guidelines, policies and procedures, and all provisions required thereby to be included in this Agreement are hereby incorporated herein by reference.

To the extent applicable, all Work and materials shall be in full accordance with the latest rules and regulations of the State Fire Marshal, safety orders of the Division of Industrial Safety, California Electrical Code, California Building Code, California Plumbing Code, and any and all other applicable laws and regulations. Nothing in this Agreement, including but not limited to, any directions, plans or specifications provided to Contractor, is to be construed to permit Work not conforming to these codes.

The Contractor shall indemnify, defend, and hold harmless the County, its officers, employees, and agents, from and against any and all claims, demands, damages, liabilities, losses, costs, and expenses, including, without limitation, to defense costs

DRAFT

and legal, accounting and other expert, consulting or professional fees, arising from, connected with, or related to any failure by Contractor, its officers, employees, agents, or subcontractors, to comply with any such laws, rules, regulations, ordinances, directives, guidelines, policies, or procedures, as determined by County in its sole judgment. Any legal defense pursuant to Contractor's indemnification obligations under this Article shall be conducted by Contractor and performed by counsel selected by Contractor and approved by County. Notwithstanding the preceding sentence, County shall have the right to participate in any such defense at its sole cost and expense, except that in the event Contractor fails to provide County with a full and adequate defense, as determined by County in its sole judgment, County shall be entitled to retain its own counsel, including, without limitation, County Counsel, and reimbursement from Contractor for all such costs and expenses incurred by County in doing so. Contractor shall not have the right to enter into any settlement, agree to any injunction or other equitable relief, or make any admission, in each case, on behalf of County without County's prior written approval.

Article 47. COMPLIANCE WITH FAIR EMPLOYMENT PRACTICES LAWS

County may require Contractor 's services on projects involving funding from various state and/or federal agencies, and as a consequence, Contractor shall comply with all applicable nondiscrimination statutes and regulations during the performance of this Agreement including but not limited to the following: Contractor and its employees and representatives shall not unlawfully discriminate against any employee or applicant for employment because of race, religion, color, national origin, ancestry, physical handicap, mental disability, medical condition, genetic information, military or veteran status, marital status, age, gender, gender identity, gender expression, sexual orientation, or sex; Contractor shall, unless exempt, comply with the applicable provisions of the Fair Employment and Housing Act (Government Code, sections 12900, et seq.) and applicable regulations promulgated thereunder (2 California Code of Regulations sections 11000, et seq.); the applicable regulations of the Fair Employment and Housing Commission implementing Government Code, section 12990, set forth in Subchapter 5 of Chapter 5 of Division 4.1 of Title 2 of the California Code of Regulations incorporated into this Agreement by reference and made a part hereof as if set forth in full; the Federal Fair Labor Standards Act, as stated in 29 USC section 203, et. Seq., and as updated from time to time; and Title VI of the Civil Rights Act of 1964, as amended. Contractor and its employees and representatives shall give written notice of their obligations under this clause as required by law.

Where applicable, Contractor shall include these nondiscrimination and compliance provisions in any of its agreements that affect or are related to the services performed herein.

Contractor shall permit access to the records of employment, employment advertisements, application forms and other pertinent data and records by County, the State of California, the California Fair Employment and Housing Commission, or any other agency of the State of California designated by the state for purposes of investigation to ascertain compliance with this Article.

Contractor's signature executing this Agreement shall provide any certifications necessary under the federal laws, the laws of the State of California, including but not limited to Government Code section 12990 and 2 California Code of Regulations section 11102.

The Contractor shall indemnify, defend, and hold harmless the County and its agents, officers, and employees from any and all liability, including, but not limited to, wages, overtime pay, liquidated damages, penalties, court costs, and attorneys' fees arising under any wage and hour law, including, but not limited to, the Federal Fair Labor Standards Act, for work performed by the Contractor's employees for which the County may be found jointly or solely liable.

County may determine a willful violation of this Article to have occurred upon receipt of a final judgment to that effect from a court in an action to which Contractor was a party, or upon receipt of a written notice from the Fair Employment and Housing Commission that it has investigated and determined that Contractor has violated the Fair Employment Practices Act and had issued an order under Labor Code section 1426 which has become final or has obtained an injunction under Labor Code Section 1429.

For willful violation of this Article, County shall have the right to terminate this Agreement either in whole or in part, and any loss or damage sustained by County in securing the goods or services thereunder shall be borne and paid for by Contractor and by the surety under the performance bond, if any, and County may deduct from any moneys due or thereafter may become due to Contractor the difference between the price named in the Agreement and the actual cost thereof to County to cure Contractor's breach of this Agreement.

Article 48. COMPLIANCE WITH DISABILITY ACTS

Contractor shall comply with: (a) section 504 of the Rehabilitation Act of 1973 which prohibits discrimination on the basis of disability in federally assisted programs; (b) the Americans with Disabilities Act (ADA) of 1990 which prohibits discrimination on the basis of disability irrespective of funding; and (c) all applicable regulations and guidelines issued pursuant to both the Rehabilitation Act and the ADA.

Article 49. EMPLOYMENT ELIGIBILITY VERIFICATION

The Contractor warrants that it fully complies with all Federal and State statutes and regulations regarding the employment of aliens and others and that all its employees performing work under this Agreement meet the citizenship or alien status requirements set forth in Federal and State statutes and regulations. The Contractor shall obtain from all employees performing work hereunder, all verification and other documentation of employment eligibility status required by Federal and State statutes and regulations including, but not limited to, the Immigration Reform and Control Act of 1986, (P.L. 99-603), or as they currently exist and as they may be hereafter amended. The Contractor shall retain all such documentation for all covered employees for the period prescribed by law.

The Contractor shall indemnify, defend, and hold harmless, the County, its agents, officers, and employees from employer sanctions and any other liability which may be assessed against the Contractor or the County or both in connection with any alleged violation of any Federal or State statutes or regulations pertaining to the eligibility for employment of any persons performing work under this Agreement.

Article 50. SHORING PLAN

Excavation for any trench five (5) feet or more in depth shall not begin until Contractor has received approval, from the Contract Administrator, of Contractor's detailed shoring plan for worker protection from the hazards of caving ground during the excavation of that trench, and any design calculations used in the preparation of the detailed plan. The detailed plan shall show the details of the design of shoring, bracing, sloping or other provisions to be made for worker protection during the excavation. No plan shall allow the use of shoring, sloping or a protective system less effective than that required by the Construction Safety Orders of the California Division of Occupational Safety and Health. If the plan complies with the shoring system standards established by the Construction Safety Orders, the plan shall be submitted at least five (5) days before Contractor intends to begin excavation for the trench. If the plan varies from the shoring system standards established by the Construction Safety Orders, the plan shall be prepared and signed by an engineer who is registered as a Civil Engineer in the State of California, and the plan and design calculations shall be submitted at least three (3) weeks before Contractor intends to begin excavation for the trench. Nothing in this Article shall be deemed to allow the use of a shoring, sloping or protective system less effective than that required by the Construction Safety Orders.

Article 51. NOTICE OF DISCOVERY OF HAZARDOUS WASTE OR UNUSUAL CONDITIONS

A. Contractor shall promptly, and before the following conditions are disturbed, notify County in writing, in the event Contractor encounters, after excavating to a depth of greater than four (4) feet, any of the following:

1. Material that Contractor believes may be hazardous waste, as defined in section 25117 of the Health and Safety Code, which is required to be removed to a Class I, Class II, or Class III disposal site in accordance with provisions of existing law; or

2. Subsurface or latent physical conditions at the site differing materially from those indicated in the Contract Documents; or

3. Unknown physical conditions at the site of any unusual nature, differing materially from those ordinarily encountered and generally recognized as inherent in the Work provided for in this Agreement.

B. County shall promptly investigate the conditions, and if it finds that the conditions do materially so differ, or do involve hazardous waste, or cause a decrease or increase in Contractor's cost of, or time required for performance

DRAFT

of any part of the Work, an adjustment, excluding loss of anticipated profits, will be made and this Agreement will be modified by a Change Order. County will notify Contractor of County's determination as to whether or not an adjustment of this Agreement is warranted.

C. In the event a dispute arises between County and Contractor as to whether the conditions materially differ, or involve hazardous waste, or cause a decrease or increase in Contractor's cost of, or time required for, performance of any part of the Work, Contractor shall not be excused from any scheduled completion date provided for by this Agreement, but shall proceed with all Work to be performed under this Agreement. Contractor shall retain any and all rights provided either by contract or by law which pertain to the resolution of disputes and protests between Contractor and County.

Article 52. COMPLIANCE WITH BUILD AMERICA, BUY AMERICA ACT

Contractor shall comply with the "Build America, Buy America Act" ("BABAA") as added by Section 70911 of the Infrastructure Investment and Jobs Act (135 Stat. 429, 117 P.L. 58). This Project is subject to the BABAA. On April 18, 2022, the United States Office of Management and Budget published OMB Memo M-22-11, which is attached to these bid documents as Exhibit C, that established guidance in the implementation of the BABAA. FEMA has also published guidance on the BABAA that is available at the following website: https://www.fema.gov/grants/policy-guidance/buy-america. Contractor is expected review both the OMB Memo M-22-11 and FEMA's guidance in the implementation of this clause.

The Act establishes a domestic content procurement preference for projects funded by federal financial assistance. This clause implements the BABAA by providing a preference for domestic content procurement. This clause replaces Caltrans Standard Specifications 6-1.04. Contractor shall comply this preference by ensuring that all of the following requirements are met:

1. All iron and steel used in this Project are produced in the United States.
2. The manufactured products used in this Project are produced in the United States.
3. The construction materials used in the Project are produced in the United States.

(BABAA § 70912(2).)
The BABAA defines the phrase "construction materials" in sections 70911(5) and 70917(c), and as further interpreted by OMB Memo M-22-11, to include an article, material, or supply—other than an item of primarily iron or steel; a manufactured product; cement and cementitious materials; aggregates such as stone, sand, or gravel; or aggregate binding agents or additives—that is or consists primarily of any of the following:

1. Non-ferrous metals.
2. Plastic and polymer-based products (including polyvinylchloride, composite building materials, and polymers used in fiber optic cables).
3. Glass (including optic glass).
4. Lumber.
5. Drywall.

The BABAA defines the term "produced in the United States" in Section 70912(6) to mean the following:

1. In the case of iron or steel products, that all manufacturing processes, from the initial melting stage through the application of coatings, occurred in the United States.
2. In the case of manufactured products, that—
    I. The manufactured product was manufactured in the United States; and
    II. **T**he cost of the components of the manufactured product that are mined, produced, or manufactured in the United States is greater than 55 percent of the total cost of all components of the manufactured product, unless another standard for determining the minimum amount of domestic content of the manufactured product has been established under applicable law or regulation.

In the case of construction materials, that all manufacturing processes for the construction material occurred in the United States.

Article 53. DEVIATION FROM PLANS AND SPECIFICATIONS

No deviation shall be made from the plans and/or the specifications, if any, without the prior written approve of the County.

Article 54. UNITY OF PLANS AND SPECIFICATIONS

The plans and specifications, if any, are one document, and any work shown or mentioned, in one and not in the other, or vice versa, shall be furnished or performed as though mentioned or shown in both.

Article 55. ADDITIONAL WORK

County reserves the right to make such alterations, deviations, additions to, or deletions from the plans and specifications, including the right to increase or decrease the quantity of any item or portion of work or to delete any items or portion of work, as may be deemed by the Contract Administrator or Project Manager to be necessary or advisable, and to require such additional work to be required for the proper completion of the whole Work contemplated.

Any such changes will be set forth in a written Contract Change Order (Change Order) which will specify the additional work, adjustment of performance time, if any, and basis for additional compensation, if any. Any Change Order shall not become effective until approved by the Environmental Management Department's Manager, or where required, by the Board of Supervisors.

Article 56. ACCESS TO THE WORK

County, and any state or local authorities having jurisdiction overt the Project, shall at all times have access to the Work.

Article 57. NO THIRD-PARTY BENEFICIARIES

Nothing in this Agreement is intended, nor will be deemed, to confer rights or remedies upon any person or legal entity not a party to this Agreement.

Article 58. RECYCLED BOND PAPER

Contractor agrees to use recycle-content paper to the maximum extent possible on this Agreement.

Article 59. CONTRACT ADMINISTRATOR

The County Officer or employee with responsibility for administering this Agreement is Jeffrey Warren, Director, Environmental Management Department, or successor.

Article 60. AUTHORIZED SIGNATURES

The parties hereto represent that the undersigned individuals executing this Agreement on their behalf are fully authorized to do so by law or other appropriate instrument and to bind upon said parties the obligations set forth herein.

Article 61. PARTIAL INVALIDITY

If any provision of this Agreement is held by a court of competent jurisdiction to be invalid, void or unenforceable, the remaining provisions will continue in full force and effect without being impaired or invalidated in any way.

DRAFT

Article 62. ENTIRE AGREEMENT

This document and the documents referred to herein or exhibits hereto are the entire Agreement between the parties and they incorporate or supersede all prior written or oral agreements or understandings.

LIST OF EXHIBITS:

- **Exhibit A – Application and Certificate for Payment**
- **Exhibit B – California Levine Act Statement**
- **Exhibit C – Build America Buy America Act**

DRAFT

IN WITNESS WHEREOF, the said Environmental Management Department of the County of El Dorado, State of California, has caused this Agreement to be executed by County's Board of Supervisors, on its behalf, and the said Contractor has signed this Agreement the day and year written below.

COUNTY OF EL DORADO

By: _____ Dated: _____

, Chair
Board of Supervisors
County of El Dorado

ATTEST:
Kim Dawson, Clerk
Of the Board of Supervisors

By: _____ Dated: _____

Deputy Clerk

CONTRACTOR

By: _____ Dated: _____

President

By: _____ Dated: _____

Secretary

License No.: _____ Federal Employer Identification No. _____

NOTE: If Contractor is a corporation, the legal name of the corporation shall be set forth above together with the signature of the officer or officers authorized to sign contracts on behalf of the corporation; if Contractor is a co-partnership, the true name of the firm shall be set forth above together with the signature of the partner or partners authorized to sign contracts on behalf of the co-partnership; and if Contractor is an individual, his/her signature shall be placed above. Contractor executing this document on behalf of a corporation or partnership shall be prepared to demonstrate by resolution, article, or otherwise that it is appropriately authorized to act in these regards. For such corporation or partnership, such authority shall be demonstrated to the satisfaction of County. If signature is by an agent, other than officer of a corporation or a member of a partnership, an appropriate Power of Attorney shall be on file with the Department prior to signing this document.

Mailing Address: _____

Business Address: _____

City, Zip: _____

Phone: _____ Fax: _____

*** END OF CONTRACT**

DRAFT

Contractor's Name

Exhibit B

California Levine Act Statement

California Levine Act Statement

California Government Code section 84308, commonly referred to as the "Levine Act," prohibits any officer of El Dorado County from participating in any action related to a contract if he or she accepts, solicits, or directs any political contributions totaling more than two hundred and fifty dollars ($250) within the previous twelve (12) months, and for twelve (12) months following the date a final decision concerning the contract has been made, from the person or company awarded the contract. The Levine Act also requires disclosure of such contribution by a party to be awarded a specific contract. An officer of El Dorado County includes the Board of Supervisors, any elected official, and the chief administrative officer (collectively "Officer"). It is the Contractor's responsibility to confirm the appropriate "Officer" and name the individual(s) in their disclosure.

Have you or your company, or any agent on behalf of you or your company, made any political contribution(s), or been solicited to make a contribution by an Officer or had an Officer direct you to make a contribution of more than $250 to an Officer of the County of El Dorado in the twelve months preceding the date of the submission of your proposals or the anticipated date of any Officer action related to this contract?

_____YES _____NO
If yes, please identify the person(s) by name:

Do you or your company, or any agency on behalf of you or your company, anticipate or plan to make any political contribution(s) of more than $250 to an Officer of the County of El Dorado in the twelve months following any Officer action related to this contract?

_____YES _____NO
If yes, please identify the person(s) by name:

Answering YES to either of the two questions above does not preclude the County of El Dorado from awarding a contract to your firm or any taking any subsequent action related to the contract. It does, however, preclude the identified Officer(s) from participating in any actions related to this contract.

Date	Signature of authorized individual
Type or write name of company	Type or write name of authorized individual

DRAFT

APPLICATION AND CERTIFICATE FOR PAYMENT - EXHIBIT A

TO OWNER:
El Dorado County
2850 Fairlane Court
Placerville, California 95667

FROM CONTRACTOR:

Project:
Bid #24-0056
Union Mine Wastewater Treatment Facility
Headworks Construction Project

APPLICATION #: 1
PERIOD TO:
PROJECT NOS:
CONTRACT DATE:

Distribution to:
- ☐ County
- ☐ Cont Adm
- ☐ Contractor
- ☐
- ☐

Application is made for payment, as shown below, in connection with the Contract.
Continuation Sheet is attached.

1. ORIGINAL CONTRACT SUM	$
2. Net change by Change Orders	$
3. CONTRACT SUM TO DATE (Line 1 +/- 2)	$
4. TOTAL COMPLETED & STORED TO DATE-$ (Column G on Continuation Sheet)	
5. RETAINAGE:	
a. _____ of Completed Work (Columns D+E on Continuation Sheet)	$
b. _____ of Stored Material (Column F on Continuation Sheet)	$
Total Retainage (Line 5a + 5b or Total in Column 1 of Continuation Sheet)	$
6. TOTAL EARNED LESS RETAINAGE (Line 4 less Line 5 Total)	$
7. LESS PREVIOUS CERTIFICATES FOR PAYMENT (Line 6 from prior Certificate)	$
8. CURRENT PAYMENT DUE	$
9. BALANCE TO FINISH, INCLUDING RETAINAGE (Line 3 less Line 6)	$

CHANGE ORDER SUMMARY	ADDITIONS	DEDUCTIONS
Total changes approved in previous months by Contract Administrator		
Total approved this Month		
TOTALS		
NET CHANGES by Change Order		

The undersigned Contractor certifies that to the best of the Contractor's knowledge, information and belief the Work covered by this Application for Payment has been completed in accordance with the Contract Documents, that all amounts have been paid by the Contractor for Work for which previous Certificates for Payment were issued and payments received from the Owner, and that current payment shown therein is now due.

CONTRACTOR:

By: _____ Date: _____

State of: California
County of: El Dorado

CERTIFICATE FOR PAYMENT

In accordance with Contract Documents, based on on-site observations and the data comprising application, the Contract Administrator certifies to El Dorado County that to the best of the Contract Administrator's knowledge, information and belief the Work has progressed as indicated, the quality of the Work is in accordance with the Contract Documents, and the Contractor is entitled to payment of the AMOUNT CERTIFIED.

AMOUNT CERTIFIED ---------- $ _____

(Attach explanation if amount certified differs from the amount applied for. Initial all figures on this application and on the Continuation Sheet that are changed to conform to the amount certified.)

CONTRACT ADMINISTRATOR

By: _____ Date: _____

This Certificate is not negotiable. The AMOUNT CERTIFIED is payable only to the Contractor named herein. Issuance, payment and acceptance of payment are without prejudice to any rights of the Owner of Contractor under this Contract.

CONTINUATION SHEET

ATTACHMENT TO PAY APPLICATION

APPLICATION NUMBER: 1
APPLICATION DATE:
PERIOD TO:
CONTRACTOR'S PROJECT NO:

PROJECT:

Bid #24-0056

Union Mine Wastewater Treatment Facility Headworks Construction Project

A	B	C	D	E	F	G		H	I
Item No.	Description of Work	Scheduled Value	Work Completed		Materials Presently Stored (Not In D or E)	Total Completed And Stored To Date (D + E + F)	% (G/C)	Balance To Finish (C - G)	Retainage
			From Previous Application (D + E)	This Period					
1									
2									
3									
4									
5									
6									
7									
8									
9									
10									
11									
12									
13									
14									
15									
16									
17									
18									
19									
20									
21									
22									
23									
24									
25									
26									
27									
28									
	SUBTOTALS PAGE 2								

EXECUTIVE OFFICE OF THE PRESIDENT
OFFICE OF MANAGEMENT AND BUDGET
WASHINGTON, D.C. 20503

April 18, 2022

M-22-11

MEMORANDUM FOR HEADS OF EXECUTIVE DEPARTMENTS AND AGENCIES

FROM: Shalanda D. Young
Director

SUBJECT: Initial Implementation Guidance on Application of Buy America Preference in Federal Financial Assistance Programs for Infrastructure

On November 15, 2021, President Biden signed into law the Infrastructure Investment and Jobs Act ("IIJA"), Pub. L. No. 117-58, which includes the Build America, Buy America Act ("the Act"). Pub. L. No. 117-58, §§ 70901-52. The Act strengthens Made in America Laws[1] and will bolster America's industrial base, protect national security, and support high-paying jobs. The Act requires that no later than May 14, 2022—180 days after the enactment of the IIJA—the head of each covered Federal agency[2] shall ensure that "none of the funds made available for a Federal financial assistance program for infrastructure, including each deficient program, may be obligated for a project unless all of the iron, steel, manufactured products, and construction materials used in the project are produced in the United States."[3]

The Act affirms, consistent with Executive Order 14005, *Ensuring the Future Is Made in All of America by All of America's Workers* ("the Executive Order"), this Administration's priority to "use terms and conditions of Federal financial assistance awards to maximize the use of goods, products, and materials produced in, and services offered in, the United States."[4]

The Act provides statutory authorities for the Made in America Office ("MIAO") in the Office of Management and Budget ("OMB") to maximize and enforce compliance with Made in

[1] "Made in America Laws" means all statutes, regulations, rules, and Executive Orders relating to Federal financial assistance awards or Federal procurement, including those that refer to "Buy America" or "Buy American," that require, or provide a preference for, the purchase or acquisition of goods, products, or materials produced in the United States, including iron, steel, and manufactured products offered in the United States. Made in America Laws include laws requiring domestic preference for maritime transport, including the Merchant Marine Act of 1920 (Pub. L. No. 66-261), also known as the Jones Act. Exec. Order No. 14,005, 86 Fed. Reg. 7475, § 2(b) (Jan. 28, 2021), *available at* https://www.federalregister.gov/documents/2021/01/28/2021-02038/ensuring-the-future-is-made-in-all-of-america-by-all-of-americas-workers. Made in America Laws also include laws that give preference to Indian-owned and -controlled businesses, such as the Buy Indian Act (25 U.S.C. 47), that produce items in the United States.

[2] For the purposes of this guidance, the terms "Federal agency" and "agency" mean any authority of the United States that is an "agency" (as defined in section 3502 of title 44, United States Code), other than an independent regulatory agency (as defined in that section). IIJA, § 70912(3).

[3] IIJA, § 70914(a).

[4] Exec. Order No. 14,005 (see footnote 1).

America Laws.[5] MIAO aims to increase reliance on domestic supply chains and reduce the need for waivers through a strategic process aimed at: achieving consistency across agencies; gathering data to support decision-making to make U.S. supply chains more resilient; bringing increased transparency to waivers in order to send clear demand signals to domestic producers; and concentrating efforts on changes that will have the greatest impact.[6]

This memorandum provides implementation guidance to Federal agencies on the application of: (1) a "Buy America" preference[7] to Federal financial assistance programs for infrastructure; and (2) a transparent process to waive such a preference, when necessary. A Federal financial assistance program for infrastructure is any program under which an award may be issued for an infrastructure project, regardless of whether infrastructure is the primary purpose of the award. The term "project" means any activity related to the construction, alteration, maintenance, or repair of infrastructure in the United States.[8]

Agencies should determine how this guidance is best applied to their infrastructure programs and processes, and consult with OMB, as needed, on establishing criteria, processes, and procedures for applying a Buy America preference and issuing waivers. OMB may update or provide additional guidance, as appropriate, to further assist agencies in the implementation of a Buy America preference.

I. Application of a Buy America Preference

By May 14, 2022, agencies must ensure that all applicable programs comply with section 70914 of the Act, including by the incorporation of a Buy America preference in the terms and conditions of each award with an infrastructure project.[9] The Act requires the following Buy America preference:

(1) All iron and steel used in the project are produced in the United States. This means all manufacturing processes, from the initial melting stage through the application of coatings, occurred in the United States.

(2) All manufactured products used in the project are produced in the United States. This means the manufactured product was manufactured in the United States, and the cost of the components of the manufactured product that are mined, produced, or manufactured in the United States is greater than 55 percent of the total cost of all components of the manufactured product, unless another standard for determining the minimum amount of domestic content of the manufactured product has been established under applicable law or regulation.

[5] IIJA, § 70923(a) & (b)(1).
[6] OMB Memorandum M-21-26, Increasing Opportunities for Domestic Sourcing and Reducing the Need for Waivers from Made in America Laws available at: https://www.whitehouse.gov/wp-content/uploads/2020/11/M-21-06.pdf
[7] For the purposes of this guidance, a "Buy America" preference is a domestic content procurement preference as defined in IIJA, § 70912(2).
[8] IIJA, § 70912 (5) & (7).
[9] See Appendix I: Example of Award Term - Required Use of American Iron, Steel, Manufactured Products, and Construction Materials.

(3) All construction materials are manufactured in the United States. This means that all manufacturing processes for the construction material occurred in the United States.[10, 11]

II. Applicability to Federal Financial Assistance Programs

This guidance applies to all Federal financial assistance as defined in section 200.1 of title 2, Code of Federal Regulations[12]—whether or not funded through IIJA—where funds are appropriated or otherwise made available and used for a project for infrastructure. Federal financial assistance means assistance that non-Federal entities receive or administer in the form of grants, cooperative agreements, non-cash contributions or donations of property, direct assistance, loans, loan guarantees, and other types of financial assistance. The term "non-Federal entity" includes States, local governments, territories, Indian tribes, Institutions of Higher Education (IHE), and nonprofit organizations.[13]

For purposes of this guidance, for-profit organizations are not considered non-Federal entities. However, this guidance does not alter independent statutory authorities that agencies may have to include domestic content requirements in awards of Federal financial assistance issued to for-profit organizations.

Federal agencies are encouraged to consult with OMB if they are uncertain about the applicability of this guidance to any particular infrastructure program.

Before applying a Buy America preference to a covered program that will affect Tribal communities, Federal agencies should follow the consultation policies established through Executive Order 13175, *Consultation and Coordination with Indian Tribal Governments*, and consistent with policies set forth in the Presidential Memorandum of January 26, 2021, on Tribal Consultation and Strengthening Nation-Nation Relationships. Federal agencies should commence consultation promptly.

This guidance does not apply to "expenditures for assistance authorized under section 402, 403, 404, 406, 408, or 502 of the Robert T. Stafford Disaster Relief and Emergency Assistance Act (42 U.S.C. 5170a, 5170b, 16 5170c, 5172, 5174, or 5192) relating to a major disaster or emergency declared by the President under section 401 or 501, respectively, of such Act (42 U.S.C. 5170, 5191) or pre and post disaster or emergency response expenditures."[14] "[P]re and post disaster or emergency response expenditures" consist of expenditures for financial assistance that are (1) authorized by statutes other than the Stafford Act, 42 U.S.C. §§ 5121 et seq., and (2) made in anticipation of or response to an event or events that qualify as an "emergency" or "major disaster" within the meaning of the Stafford Act, *id.* § 5122(1), (2). Awards made to support the construction or improvement of infrastructure to mitigate the damage that may be caused by a non-imminent future emergency or disaster, such as awards

[10] IIJA, § 70912 (2) & (6)(B)(ii).
[11] See Section VIII. of this guidance for more information on construction materials.
[12] IIJA § 70912(4)(A)
[13] *See* 2 C.F.R. § 200.1.
[14] IIJA § 70912(4)(B)

made under FEMA's Flood Mitigation Assistance program,[15] do not qualify as "pre and post disaster or emergency response expenditures."

Subawards should conform to the terms and conditions of the Federal award from which they flow.[16]

The IIJA's definition of "infrastructure" encompasses public infrastructure projects. Thus, the term "infrastructure" includes, at a minimum, the structures, facilities, and equipment for, in the United States, roads, highways, and bridges; public transportation; dams, ports, harbors, and other maritime facilities; intercity passenger and freight railroads; freight and intermodal facilities; airports; water systems, including drinking water and wastewater systems; electrical transmission facilities and systems; utilities; broadband infrastructure; and buildings and real property.[17] Agencies should treat structures, facilities, and equipment that generate, transport, and distribute energy - including electric vehicle (EV) charging - as infrastructure.

When determining if a program has infrastructure expenditures, Federal agencies should interpret the term "infrastructure" broadly and consider the definition provided above as illustrative and not exhaustive. When determining if a particular construction project of a type not listed in the definition above constitutes "infrastructure," agencies should consider whether the project will serve a public function, including whether the project is publicly owned and operated, privately operated on behalf of the public, or is a place of public accommodation, as opposed to a project that is privately owned and not open to the public. Projects with the former qualities have greater indicia of infrastructure, while projects with the latter quality have fewer. Projects consisting solely of the purchase, construction, or improvement of a private home for personal use, for example, would not constitute an infrastructure project. Federal agencies are strongly encouraged to consult with OMB when making such determinations.

Agencies should consult with MIAO regarding their readiness to apply the requirements of the Act to covered programs. Agencies with questions regarding the application of a Buy America preference to agency-specific programs, including questions about the possible use of waivers during adjustment periods as agencies work to implement the Act, are advised to reach out to MIAO for technical assistance and advice.

III. Consistency with International Agreements

Pursuant to section 70914(e) of the Act, this guidance must be applied in a manner consistent with the obligations of the United States under international agreements.

IV. Avoid Unnecessary Disruption

The Act makes clear that its preferences apply to a Federal financial assistance program for infrastructure only to the extent that a domestic content procurement preference as described

[15] *See* 42 U.S.C. § 4104c.
[16] 2 CFR 200.101 (b) (2)
[17] IIJA, § 70912(5).

in section 70914 of the Act does not already apply to iron, steel, manufactured products, and construction materials.[18] Agencies should consider whether existing domestic content requirements meet the standards in the Act, as described in this memorandum. Agencies must make necessary changes to come into compliance with the Act's requirements, while preserving policies and provisions that already meet or exceed the standards required by the Act. For example, a program in which the standards for iron and steel already meet the standards in the Act may nevertheless be required to adopt new standards for manufactured products and construction materials. Maintaining current policies where appropriate avoids unnecessary disruption to programs, or elements of programs, that already meet or exceed Build America, Buy America requirements.

V. Effective Date for Awards

Agencies must ensure that, starting on May 14, 2022, all Federal financial assistance programs for infrastructure comply with the requirements of section 70914 of the Act. Therefore, new awards made on or after May 14, 2022, must take appropriate steps to ensure financial assistance awards comply with these requirements, which may include appropriate terms and conditions[19] incorporating a Buy America preference. Renewal awards and amendments obligating additional funds to existing awards that are executed on or after May 14, 2022, must also include a Buy America preference. This means that agencies must include a Buy America preference in awards issued on or after May 14, 2022, even if Notices of Funding Opportunities for those awards did not include a Buy America preference. In these cases, agencies may consider whether public interest waivers may be needed to avoid undue increases in the time and cost of a project. Similarly, public interest waivers may be needed for awards and amendments made on or after May 14, 2022, where budgets for purchase of covered materials have already been agreed upon (including if materials have been ordered and construction has begun). Consistent with the guidance provided below, agencies should issue waivers judiciously and clearly communicate to recipients the limitations and conditions of any such waivers.

VI. Articles, Materials, and Supplies for Infrastructure

A Buy America preference, as defined in section I of this guidance, only applies to the iron and steel, manufactured products, and construction materials used for the infrastructure project under an award. If an agency has determined that no funds from a particular award under a covered program will be used for infrastructure, a Buy America preference does not apply to that award. Similarly, for a covered program, a Buy America preference does not apply to non-infrastructure spending under an award that also includes a covered project. A Buy America preference applies to *an entire infrastructure project*, even if it is funded by both Federal and non-Federal funds under one or more awards.

A Buy America preference only applies to articles, materials, and supplies that are consumed in, incorporated into, or affixed to an infrastructure project. As such, it does not apply

[18] IIJA, § 70917(a) &(b).
[19] See Appendix I: Example of Award Term - Required Use of American Iron, Steel, Manufactured Products, and Construction Materials for exemplary language.

to tools, equipment, and supplies, such as temporary scaffolding, brought to the construction site and removed at or before the completion of the infrastructure project. Nor does a Buy America preference apply to equipment and furnishings, such as movable chairs, desks, and portable computer equipment, that are used at or within the finished infrastructure project, but are not an integral part of or permanently affixed to the structure.

For the purposes of this guidance, an article, material, or supply should only be classified into *one* of the following categories: (1) iron or steel; (2) a manufactured product; or (3) a construction material. For ease of administration, an article, material, or supply should not be considered to fall into multiple categories. Agencies should apply the iron and steel test to items that are predominantly iron or steel, unless another standard applies under law or regulation.

Any waivers from these requirements must be in writing and meet the requirements of section 70914(b).

VII. Issuing Buy America Waivers

Pursuant to Section 70914(c) of the Act, the head of a Federal agency may waive the application of a Buy America preference under an infrastructure program in any case in which the head of the Federal agency finds that—

(1) applying the domestic content procurement preference would be inconsistent with the public interest (a "public interest waiver");
(2) types of iron, steel, manufactured products, or construction materials are not produced in the United States in sufficient and reasonably available quantities or of a satisfactory quality (a "nonavailability waiver"); or
(3) the inclusion of iron, steel, manufactured products, or construction materials produced in the United States will increase the cost of the overall project by more than 25 percent (an "unreasonable cost waiver").

Federal agencies are responsible for processing and approving all waivers, including waivers requested by recipients and on behalf of subrecipients. To the greatest extent practicable, waivers should be targeted to specific products and projects.[20]

Before issuing a waiver, the head of the Federal agency must make publicly available on the agency's website a detailed written explanation for the proposed determination to issue the waiver and provide at least 15 days for public comment on the proposed waiver.[21] General applicability waivers are subject to a minimum 30-day public comment period.[22] By April 29, 2022, agencies should provide the website address where they will be posting proposed waivers for public comment to MBX.OMB.MadeInAmerica@omb.eop.gov. Pursuant to sections 70914(c) and 70937 of the Act, the waiver must be cross-posted to a centralized waiver transparency website managed by GSA, BuyAmerican.gov,[23] no later than November 15, 2022.

[20] See Section VII of this guidance for information on waiver principles and criteria.
[21] Executive Order, § 4(b)(i)(2); IIJA, § 70914(c); IIJA, § 70937 (note that "Buy American" as used in this section also refers to Buy America preferences, per IIJA, § 70932(1)).
[22] IIJA § 70914(d)(2)(A)(ii). See Section VII of this guidance for information on general applicability waivers.
[23] BuyAmerican.gov redirects to MadeInAmerica.gov.

To minimize duplication and promote efficiency, MIAO and GSA will coordinate with agencies on the expansion of the existing website's functionality to display waivers for Federal financial assistance and provide further instructions to agencies as necessary.

Federal agencies are responsible for performing due diligence and approving or rejecting waivers consistent with the Act, this guidance, and any other applicable Buy America laws. Federal agencies should notify MIAO in advance of posting an award- or project-level proposed waiver for public comment. However, Federal agencies must consult with MIAO for proposed waivers with broader applicability (such as a general applicability waiver) before posting them for public comment. The purpose of the consultation is to identify any opportunities to structure the waiver in order to maximize the use of goods, products, and materials produced in the United States to the greatest extent possible consistent with law. Federal agencies should send proposed waivers for review to MBX.OMB.MIAwaivers@omb.eop.gov.

Federal agencies must submit to MIAO a proposed waiver for review after the public comment period has concluded. MIAO will review the proposed waiver to determine if it is consistent with applicable law and policy,[24] and will notify the Federal agency of its determination.

All waiver requests must include a detailed justification for the use of goods, products, or materials mined, produced, or manufactured outside the United States[25] and a certification that there was a good faith effort to solicit bids for domestic products supported by terms included in requests for proposals, contracts, and nonproprietary communications with potential suppliers.[26] In addition, at a minimum and to the greatest extent practicable, each proposed waiver submitted to MIAO should include the following information, as applicable:

- Waiver type (nonavailability, unreasonable cost, or public interest)
- Recipient name and Unique Entity Identifier (UEI)
- Federal awarding agency organizational information (e.g., Common Government-wide Accounting Classification (CGAC) Agency Code)
- Financial assistance listing name and number
- Federal financial assistance program name
- Federal Award Identification Number (FAIN) (if available)
- Federal financial assistance funding amount
- Total cost of infrastructure expenditures, including all Federal and non-Federal funds (to the extent known)
- Infrastructure project description and location (to the extent known)
- List of iron or steel item(s), manufactured products, and construction material(s) proposed to be excepted from Buy America requirements, including name, cost, country(ies) of origin (if known), and relevant PSC and NAICS code for each.
- A certification that the Federal official or assistance recipient made a good faith effort to solicit bids for domestic products supported by terms included in requests for proposals, contracts, and nonproprietary communications with the prime contractor.

[24] Executive Order, § 4(c).
[25] IIJA, § 70937(c)(2)(A).
[26] IIJA, § 70937(c)(2)(D).

- A statement of waiver justification, including a description of efforts made (e.g., market research, industry outreach), by the Federal awarding agency and, and in the case of a project or award specific waiver, by the recipient, in an attempt to avoid the need for a waiver. Such a justification may cite, if applicable, the absence of any Buy America-compliant bids received in response to a solicitation.
- Anticipated impact if no waiver is issued.
- Any relevant comments received through the public comment period.

The purpose of the information is to ensure that the agency has adequate information to perform due diligence, that MIAO has sufficient information to determine whether the proposed waiver is consistent with law and policy, and that sufficient information is available for public review. Information provided for public review should help interested manufacturers gauge the demand for products for which agencies are considering waiving a Buy America preference.

To avoid a need for duplicative waiver requests from entities that receive funding for one infrastructure project through multiple Federal agencies, the Federal agency contributing the greatest amount of Federal funds for the project should be considered the "Cognizant Agency for Made in America" and should take responsibility for coordinating with the other Federal awarding agencies. Such coordination will provide uniform waiver criteria and adjudication processes, minimize duplicative efforts among Federal agencies, and reduce burdens on recipients. The Cognizant Agency for Made in America shall be responsible for consulting with the other Federal awarding agencies, publicizing the proposed joint waiver, and submitting the proposed joint waiver for review to MIAO.

a. Exceptions for Unforeseen and Exigent Circumstances

In limited situations where there is an urgent need in an unforeseen and exigent circumstance, agencies have the authority to waive the application of Buy America preferences without submitting the waiver for public comment and MIAO determination.[27] As an exception to the public transparency requirements of the Act, agencies should exercise that authority only when necessary. Further, to ensure MIAO can fulfill its role as a central and transparent source of Made in America waivers, an agency that issues a waiver without first seeking public comment and MIAO approval must, within 30 days of the waiver's issuance, submit a report to MIAO explaining its reliance upon the "unforeseen and exigent circumstance" exception.[28] MIAO will provide further instructions to agencies on how to submit those reports. Although public posting and MIAO review may be waived in exigent circumstances, agencies remain responsible for performing due diligence appropriate to the circumstances, consistent with the principles and criteria in paragraphs VII(b) and (c) below.

[27] IIJA, § 70937(b)(2).
[28] This reporting process was established pursuant to Executive Order 14,005, § 4(d) and OMB Guidance on Improving the Transparency of Made in America Waivers available at: https://www.whitehouse.gov/wp-content/uploads/2021/10/Guidance-Memo-Improving-the-Transparency-of-Made-in-America-Waivers.pdf.

b. Waiver Principles and Criteria

To ensure they are scrupulously monitoring, enforcing, and complying with applicable Buy America Laws and minimizing the use of waivers,[29] agencies must apply standard criteria to determine whether to grant a waiver in a given circumstance. Agencies with existing criteria must review it for consistency with this guidance and update it as appropriate. All other agencies must establish criteria.

Agencies may reject or grant waivers in whole or in part. To the greatest extent practicable, waivers should be issued at the project level and be product-specific. Overly broad waivers undermine market signals designed to boost domestic supply chains, particularly for key articles, materials and supplies in critical supply chains (i.e., critical supply chains identified in Executive Order 14017, *America's Supply Chains*). When necessary, agencies may consider issuing a waiver that has applicability beyond a single project; however, agencies should always issue, construe, and apply waivers to ensure the maximum utilization of goods, products, and materials produced in the United States, consistent with applicable law. Federal agencies may consult with MIAO when establishing or modifying criteria for granting waivers. They may also work within the Made in America Council, a practice that will help to foster consistency across agencies to the greatest extent practical and appropriate, given agency and program missions.

Federal agencies should use the following principles before issuing a waiver of any type:

- **Time-limited**: In certain limited circumstances, a Federal agency may determine that a waiver should be constrained principally by a length of time, rather than by the specific projects to which it applies. Waivers of this type may be appropriate, for example, when an item that is "nonavailable" is widely used in projects funded by a particular program's awards. When issuing such a waiver, the agency should identify a short, definite time frame (e.g., no more than one to two years) designed to ensure that, as domestic supply becomes available, domestic producers will have prompt access to the market created by the program.
- **Targeted**: Waivers that are not limited to particular projects should apply only to the item(s), product(s), or material(s) or category(ies) of item(s), product(s), or material(s) necessary. Waivers that are overly broad will tend to undermine domestic preference policies. Broader waivers will receive greater scrutiny from MIAO.
- **Conditional**: Federal agencies are encouraged to issue waivers with specific conditions that support the policies of the Act and the Executive Order.

These principles and criteria should be viewed as minimum requirements for the use of waivers by Federal agencies.[30]

Nonavailability Waivers

Before granting a nonavailability waiver, agencies should consider whether the recipient has performed thorough market research, which may be accomplished with assistance from the agency, and adequately considered, where appropriate, qualifying alternate items, products, or

[29] IIJA § 70933(2).
[30] See Section IV. of this guidance for agencies that have existing regulations or guidance.

materials. Waivers should describe the market research activities and methods to identify domestically manufactured items capable of satisfying the requirement, including the timing of the research and conclusions reached on the availability of sources. Agencies are encouraged to engage with the Made in America Council to develop resource lists for common items, goods, or materials.

Unreasonable Cost Waivers

An unreasonable cost waiver is available if the inclusion of iron, steel, manufactured products, or construction materials produced in the United States will increase the cost of the overall project by more than 25 percent. Before granting an unreasonable-cost waiver, to the extent permitted by law, agencies should ensure the recipient has provided adequate documentation that no domestic alternatives are available within this cost parameter. Agencies may assist recipients in gathering documentation.

For requests citing unreasonable cost as the statutory basis of the waiver, the waiver justification must include, as applicable, a comparison of the cost of the domestic product to the cost of the foreign product or a comparison of the overall cost of the project with domestic products to the overall cost of the project with foreign-origin products, pursuant to the requirements of the applicable Made in America law.[31] Publicly available cost comparison data may be provided in lieu of proprietary pricing information.[32] Unreasonable-cost waivers should be no broader than necessary.

Public Interest Waivers

A waiver in the public interest may be appropriate where an agency determines that other important policy goals cannot be achieved consistent with the Buy America requirements established by the Act and the proposed waiver would not meet the requirements for a nonavailability or unreasonable cost waiver. Such waivers shall be used judiciously and construed to ensure the maximum utilization of goods, products, and materials produced in the United States.[33] To the extent permitted by law, determination of public interest waivers shall be made by the head of the agency with the authority over the Federal financial assistance award.[34]

Public interest waivers may have a variety of bases. As with other waivers, they should be project-specific whenever possible, as what is in the public interest may vary depending upon the circumstances of the project, recipient, and specific items, products, or materials in question.

Federal agencies may wish to consider issuing a limited number of general applicability public interest waivers in the interest of efficiency and to ease burdens for recipients. The agency remains responsible for determining whether such a waiver is appropriate to apply to any

[31] IIJA, § 70937(c)(2)(B).
[32] IIJA, § 70937(c)(2)(B).
[33] IIJA, § 70935(a).
[34] IIJA, § 70935(b).

given project; the Made in America Office will not review each application of such a waiver. The following are examples of types of public interest waivers an agency may consider issuing.[35]

- **De Minimis**: Ease of administration is important to reduce burden for recipients and agencies. Federal agencies may consider whether a general applicability public interest waiver should apply to infrastructure project purchases below a de minimis threshold. An agency may consider whether a public interest waiver should apply when necessary to ensure that recipients and Federal agencies make efficient use of limited resources, especially if the cost of processing the individualized waiver(s) would risk exceeding the value of the items waived. Agencies may consider adopting an agency-wide public interest waiver that sets a de minimis threshold, for example, of 5 percent of project costs up to a maximum of $1,000,000.
- **Small Grants**: Agencies may wish to consider whether it is in the public interest to waive application of a Buy America preference to awards below the Simplified Acquisition Threshold. This type of waiver may be particularly relevant in the initial years after enactment of IIJA, and may be phased out over time as agencies develop efficient waiver review capabilities.
- **Minor Components**: Agencies may wish to consider whether it is in the public interest to allow minor deviations for miscellaneous minor components within iron and steel products. A minor components waiver in the public interest may allow non-domestically produced miscellaneous minor components comprising no more than 5 percent of the total material cost of an otherwise domestically produced iron and steel product to be used. It would not be in the public interest to use a minor components waiver to exempt a whole product from the iron and steel requirements, or to allow the primary iron or steel components of the product to be produced other than domestically.
- **Adjustment Period**: Agencies should consider whether brief, time limited waivers to allow recipients and agencies to transition to new rules and processes may be in the public interest.
- **International Trade Obligations**: If a recipient is a State that has assumed procurement obligations pursuant to the Government Procurement Agreement or any other trade agreement, a waiver of a Made in America condition to ensure compliance with such obligations may be in the public interest.
- **Other Considerations**: A waiver may be in the public interest in one circumstance, but not in another, and considerations will depend upon the nature and amount of resources available to the recipient, the value of the items, goods, or materials in question, the potential domestic job impacts, and other policy considerations, including sustainability, equity, accessibility, performance standards, and the domestic content (if any) of and conditions under which the non-qualifying good was produced.

All proposed waivers citing the public interest as the statutory basis must include a detailed written statement, which shall address all appropriate factors, such as potential

[35] The list is not exhaustive and no agency is required to issue the types of waivers noted as examples. As with other general applicability waivers, generally applicable public interest waivers must be reviewed at least every five years and more often as appropriate.

obligations under international agreements, justifying why the requested waiver is in the public interest.[36]

Before granting a waiver in the public interest, to the extent permitted by law, agencies shall assess whether a significant portion of any cost advantage of a foreign-sourced product is the result of the use of dumped steel, iron, or manufactured products or the use of injuriously subsidized steel, iron, or manufactured products.[37] Agencies may consult with the International Trade Administration (ITA) in making this assessment if the granting agency deems such consultation to be helpful. The agency shall integrate any findings from the assessment into its waiver determination as appropriate.[38] MIAO will work with ITA and agencies to develop standard processes to expedite this required assessment, such as by ensuring agencies know how to easily access lists of dumped or injuriously subsidized products.

c. General Applicability Waivers

The term "general applicability waiver" refers to a waiver that applies generally across multiple awards. A general applicability waiver can be "product-specific" (e.g., applies only to a product or category of products) or "non-product specific" (e.g., applies to all "manufactured products").

General applicability waivers should be issued only when necessary to advance an agency's missions and goals, consistent with IIJA, the Executive Order, and this guidance. For example, an agency might issue a general waiver for a product for which there are well-established domestic sourcing challenges. General applicability waivers will require appropriate justification from the Federal agency.

Federal agencies with one or more existing general applicability waivers, including public interest waivers, must review such waivers within five years of the date on which the waiver was issued. Agencies issuing new general applicability waivers must review such waivers at least every five years from the date of issuance. Agencies are encouraged to review general applicability waivers more frequently, when appropriate. In conducting a review of any general applicability waiver, the head of a Federal agency shall—

(A) publish in the *Federal Register* a notice that—
    (i) describes the justification for a general applicability waiver; and
    (ii) requests public comments for a period of not less than 30 days on the continued need for a general applicability waiver; and

(B) publish in the *Federal Register* a determination on whether to continue or discontinue the general applicability waiver, considering the comments received in response to the notice published under paragraph (A).[39]

[36] IIJA, § 70937(c)(2)(C).
[37] Executive Order, § 5.
[38] Executive Order, § 5.
[39] IIJA, § 70914(d)(1) & (2).

For a period of five years beginning on the date of enactment of the Act, paragraphs (A) and (B) above shall not apply to any product-specific general applicability waiver that was issued more than 180 days before November 15, 2021.[40]

By no later than November 15, 2022, agencies with existing, non-product specific general applicability waivers that were issued more than five years before November 15, 2021 should promptly commence review of each such waiver by publishing a *Federal Register* notice as required in section 70914(d)(2)(A) of the IIJA. Should the review justify retaining the waiver, agencies should consider narrowing the waiver in a manner that would support supply chain resilience and boost incentives to manufacture key products domestically, as appropriate.

To ensure prompt commencement of projects funded by IIJA, MIAO plans to work with agencies to expedite consideration of general applicability waivers for products or categories of products for which domestic sourcing challenges have been well documented. Agencies should align such waivers with complementary policies, such as work to boost supply chain resiliency and domestic employment. General applicability waivers should include appropriate expiration dates designed to ensure that, once available, Buy America qualifying products receive appropriate consideration.

VIII. Preliminary Guidance for Construction Materials

For construction materials, the Act requires that, not later than 180 days after November 15, 2021, OMB must issue standards that define the term "all manufacturing processes" in the case of construction materials. These standards must require that each manufacturing process required for the manufacture of the construction material and the inputs of the construction material occurs in the United States. They must also reflect efforts to maximize the direct and indirect jobs benefited or created in the production of the construction material.[41]

Although the deadline to issue such guidance has not yet passed, OMB is providing preliminary and non-binding guidance to assist agencies in determining which materials are construction materials so that agencies can begin applying Buy America requirements to those materials. This preliminary guidance addresses the requirements as set forth in section 70915(b) of the IIJA while providing sufficient time for OMB to receive additional stakeholder input.

The IIJA finds that "construction materials" includes an article, material, or supply—other than an item of primarily iron or steel; a manufactured product; cement and cementitious materials; aggregates such as stone, sand, or gravel; or aggregate binding agents or additives[42]—that is or consists primarily of:

- non-ferrous metals;
- plastic and polymer-based products (including polyvinylchloride, composite building materials, and polymers used in fiber optic cables);
- glass (including optic glass);

[40] IIJA, § 70914(d)(3).
[41] IIJA, § 70915(b).
[42] IIJA, § 70917(c)(1).

- lumber; or
- drywall.[43]

To provide clarity to item, product, and material manufacturers and processers, we note that items that consist of two or more of the listed materials that have been combined together through a manufacturing process, and items that include at least one of the listed materials combined with a material that is not listed through a manufacturing process, should be treated as manufactured products, rather than as construction materials. For example, a plastic framed sliding window should be treated as a manufactured product while plate glass should be treated as a construction material.

Pending OMB's issuance of final standards on construction materials, and absent any existing applicable standard in law or regulation that meets or exceeds these preliminary standards, agencies should consider "all manufacturing processes" for construction materials to include at least the final manufacturing process and the immediately preceding manufacturing stage for the construction material. OMB is seeking additional stakeholder input before issuing further guidance identifying initial manufacturing processes for construction materials that should be considered as part of "all manufacturing processes."

Agencies should consult with MIAO, as needed, to ensure that any waiver issued for construction materials is explicitly targeted and time-limited, in order to send a clear market signal that additional standards for "all manufacturing processes" in the case of construction materials will be forthcoming.

[43] See IIJA, § 70911(5).

Appendix I: Example of Award Term - Required Use of American Iron, Steel, Manufactured Products, and Construction Materials

Where applicable, the Federal agency must include appropriate terms and conditions in all awards, in accordance with applicable legal requirements and its established procedures, in order to effectuate the requirements of the Act and this guidance. The following is sample language.

To achieve the greatest possible consistency across agencies and programs, agencies should send their proposed terms and conditions to MIAO for review prior to incorporating them into applicable awards. Agencies should begin including appropriate language in NOFOs published *before* May 14, 2022 to provide applicants fair notice of the Buy America conditions that will apply to funds obligated on or after that date.

** ** **

Recipients of an award of Federal financial assistance from a program for infrastructure are hereby notified that none of the funds provided under this award may be used for a project for infrastructure unless:

(1) all iron and steel used in the project are produced in the United States--this means all manufacturing processes, from the initial melting stage through the application of coatings, occurred in the United States;

(2) all manufactured products used in the project are produced in the United States—this means the manufactured product was manufactured in the United States; and the cost of the components of the manufactured product that are mined, produced, or manufactured in the United States is greater than 55 percent of the total cost of all components of the manufactured product, unless another standard for determining the minimum amount of domestic content of the manufactured product has been established under applicable law or regulation; and

(3) all construction materials[44] are manufactured in the United States—this means that all manufacturing processes for the construction material occurred in the United States.

The Buy America preference only applies to articles, materials, and supplies that are consumed in, incorporated into, or affixed to an infrastructure project. As such, it does not apply to tools, equipment, and supplies, such as temporary scaffolding, brought to the construction site and removed at or before the completion of the infrastructure project. Nor does a Buy America preference apply to equipment and furnishings, such as movable chairs, desks, and portable computer equipment, that are used at or within the finished infrastructure project, but are not an integral part of the structure or permanently affixed to the infrastructure project.

[44] Excludes cement and cementitious materials, aggregates such as stone, sand, or gravel, or aggregate binding agents or additives.

Waivers

When necessary, recipients may apply for, and the agency may grant, a waiver from these requirements. The agency should notify the recipient for information on the process for requesting a waiver from these requirements.

(a) When the Federal agency has made a determination that one of the following exceptions applies, the awarding official may waive the application of the domestic content procurement preference in any case in which the agency determines that:

(1) applying the domestic content procurement preference would be inconsistent with the public interest;

(2) the types of iron, steel, manufactured products, or construction materials are not produced in the United States in sufficient and reasonably available quantities or of a satisfactory quality; or

(3) the inclusion of iron, steel, manufactured products, or construction materials produced in the United States will increase the cost of the overall project by more than 25 percent.

A request to waive the application of the domestic content procurement preference must be in writing. The agency will provide instructions on the format, contents, and supporting materials required for any waiver request. Waiver requests are subject to public comment periods of no less than 15 days and must be reviewed by the Made in America Office.

There may be instances where an award qualifies, in whole or in part, for an existing waiver described at [link to awarding agency web site with information on currently applicable general applicability waivers].

Definitions[45]

"Construction materials" includes an article, material, or supply—other than an item of primarily iron or steel; a manufactured product; cement and cementitious materials; aggregates such as stone, sand, or gravel; or aggregate binding agents or additives[46]—that is or consists primarily of:

- non-ferrous metals;
- plastic and polymer-based products (including polyvinylchloride, composite building materials, and polymers used in fiber optic cables);
- glass (including optic glass);
- lumber; or
- drywall.

[45] Federal agencies may choose to provide definitions on a public-facing website and reference that website in the terms and conditions, rather than including all definitions in the terms and conditions itself. If an agency chooses to do provide definitions on a public-facing website, it is not considered a deviation from the terms and conditions provided and does not need to be reviewed by OMB.
[46] IIJA, § 70917(c)(1).

“Domestic content procurement preference’’ means all iron and steel used in the project are produced in the United States; the manufactured products used in the project are produced in the United States; or the construction materials used in the project are produced in the United States.

“Infrastructure” includes, at a minimum, the structures, facilities, and equipment for, in the United States, roads, highways, and bridges; public transportation; dams, ports, harbors, and other maritime facilities; intercity passenger and freight railroads; freight and intermodal facilities; airports; water systems, including drinking water and wastewater systems; electrical transmission facilities and systems; utilities; broadband infrastructure; and buildings and real property. Infrastructure includes facilities that generate, transport, and distribute energy.

‘‘Project’’ means the construction, alteration, maintenance, or repair of infrastructure in the United States.

COUNTY OF EL DORADO

PAYMENT BOND

(Section 9550, Civil Code)

Bond No. _____

WHEREAS, the County of El Dorado, a political subdivision of the State of California, hereafter referred to as "Obligee", has awarded to Contractor

_____

hereafter referred to as "Principal", a contract for the work described as follows:

UNION MINE WASTEWATER TREATMENT FACILITY
HEADWORKS CONSTRUCTION PROJECT
BID #24-0056

AND, WHEREAS, said Principal is required to furnish a bond in connection with said contract, guaranteeing the faithful performance thereof:

NOW, THEREFORE, we the undersigned Principal and Surety are held and firmly bound unto the Obligee, in the sum of _____Dollars, ($_____) to be paid to the Obligee, for which payment we bind ourselves, jointly and severally.

THE CONDITION OF THIS OBLIGATION IS SUCH,
That if said Principal or its subcontractors shall fail to pay any of the persons named in Civil Code Section 9100, or amounts due under the Unemployment Insurance Code with respect to work or labor performed by such claimant, or any amounts required to be deducted, withheld, and paid over to the Franchise Tax Board from the wages of employees of the Principal and his subcontractors pursuant to Section 18806 of the Revenue and Taxation Code, with respect to such work and labor, that the Surety herein will pay for the same in an amount not exceeding the sum specified in this bond, otherwise the above obligation shall be void. In case suit is brought upon this bond, the Surety will pay a reasonable attorney's fee to be fixed by the court.

This bond shall inure to the benefit of any of the persons named in Civil Code Section 9100 as to give a right of action to such persons or their assigns in any suit brought upon this bond.

Dated: _____

Correspondence or Claims relating to this bond should be sent to the Surety at the following address:

_____ _____
PRINCIPAL

_____ _____
SURETY

_____ _____
ATTORNEY-IN-FACT

NOTE: Signatures of those executing for the Principal and for the Surety must be properly acknowledged, and a Power of Attorney attached for the Surety.

NOTARY ACKNOWLEDGMENTS ATTACHED

PRINCIPAL

ACKNOWLEDGMENT

A notary public or other officer completing this certificate verifies only the identity of the individual who signed the document to which this certificate is attached, and not the truthfulness, accuracy, or validity of that document.

State of California

County of _____

On _____ before me, _____,
(here insert name and title of the officer)

personally appeared _____

_____

_____ ,

who proved to me on the basis of satisfactory evidence to be the person(s) whose name(s) is/are subscribed to the within instrument and acknowledged to me that he/she/they executed the same in his/her/their authorized capacity(ies), and that by his/her/their signature(s) on the instrument the person(s), or the entity upon behalf of which the person(s) acted, executed the instrument.

I certify under PENALTY OF PERJURY under the laws of the State of California that the foregoing paragraph is true and correct.

WITNESS my hand and official seal.

Signature _____

(Seal)

SURETY

ACKNOWLEDGMENT

A notary public or other officer completing this certificate verifies only the identity of the individual who signed the document to which this certificate is attached, and not the truthfulness, accuracy, or validity of that document.

State of California

County of _____

On_____ before me, _____,
(here insert name and title of the officer)

personally appeared _____

_____

_____ ,

who proved to me on the basis of satisfactory evidence to be the person(s) whose name(s) is/are subscribed to the within instrument and acknowledged to me that he/she/they executed the same in his/her/their authorized capacity(ies), and that by his/her/their signature(s) on the instrument the person(s), or the entity upon behalf of which the person(s) acted, executed the instrument.

I certify under PENALTY OF PERJURY under the laws of the State of California that the foregoing paragraph is true and correct.

WITNESS my hand and official seal.

Signature _____

(Seal)

COUNTY OF EL DORADO

PERFORMANCE BOND

Bond No._____

KNOW ALL MEN BY THESE PRESENTS, that we _____

the Contractor in the Contract hereto annexed, as Principal, and _____

as Surety, are held firmly bound unto the County of El Dorado, a political subdivision of the State of California, hereinafter called the "Obligee" in the sum

of _____DOLLARS,

($_____) lawful money of the United States, for which payment, well and truly to be made, we bind ourselves, jointly and severally, firmly by these presents.

Signed, sealed and dated: _____

The condition of the above obligation is such that if said Principal as Contractor in the Contract hereto annexed shall faithfully perform each and all of the conditions of said Contract to be performed by him, and shall furnish all tools, equipment, apparatus, facilities, transportation, labor and material, other than material, if any, agreed to be furnished by the Obligee, necessary to perform and complete, and to perform and complete in a good and workmanlike manner, the work of **BID #24-0056 for the UNION MINE WASTEWATER TREATMENT FACILITY HEADWORKS CONSTRUCTION PROJECT** in strict conformity with the terms and conditions set forth in the Contract hereto annexed, then this obligation shall be null and void; otherwise this bond shall remain in full force and effect and the said Surety will complete the Contract work under its own supervision, by Contract or otherwise, and pay all costs thereof for the balance due under terms of the Contract, and the said Surety, for value received, hereby stipulates and agrees that no change, extension of time, alteration or addition to the terms of the Contract or to the work to be performed thereunder shall in any wise affect its obligation on this bond, and it does hereby waive notice of any such change, extension of time, alteration or addition to the terms of the Contract or to the work.

In the event suit is brought upon this bond by the Obligee and judgment is recovered, the Surety shall pay all costs incurred by the Obligee in such suit, including a reasonable attorney's fee to be fixed by the court.

This guarantee shall insure the Obligee during the work required by any Contract and for a period of one (1) year from the date of acceptance of the work against faulty or improper materials or workmanship that may be discovered during that time.

No right of action shall accrue under this bond to or for the use of any person other than the Obligee named herein.

Dated:_____, 20_____.

Correspondence or Claims relating to this bond should be sent to the Surety at the following address:

_____ _____

PRINCIPAL

_____ _____

SURETY

_____ _____

ATTORNEY-IN-FACT

NOTE: Signatures of those executing for the Principal and the Surety must be properly acknowledged, and a Power of Attorney attached for the Surety.

NOTARY ACKNOWLEDGMENTS ATTACHED

PRINCIPAL

ACKNOWLEDGMENT

A notary public or other officer completing this certificate verifies only the identity of the individual who signed the document to which this certificate is attached, and not the truthfulness, accuracy, or validity of that document.

State of California

County of _____

On _____ before me, _____,
(here insert name and title of the officer)

personally appeared _____

_____

_____ ,

who proved to me on the basis of satisfactory evidence to be the person(s) whose name(s) is/are subscribed to the within instrument and acknowledged to me that he/she/they executed the same in his/her/their authorized capacity(ies), and that by his/her/their signature(s) on the instrument the person(s), or the entity upon behalf of which the person(s) acted, executed the instrument.

I certify under PENALTY OF PERJURY under the laws of the State of California that the foregoing paragraph is true and correct.

WITNESS my hand and official seal.

Signature _____

(Seal)

SURETY

ACKNOWLEDGMENT

A notary public or other officer completing this certificate verifies only the identity of the individual who signed the document to which this certificate is attached, and not the truthfulness, accuracy, or validity of that document.

State of California

County of _____

On _____ before me, _____,
(here insert name and title of the officer)

personally appeared _____

_____

_____ ,

who proved to me on the basis of satisfactory evidence to be the person(s) whose name(s) is/are subscribed to the within instrument and acknowledged to me that he/she/they executed the same in his/her/their authorized capacity(ies), and that by his/her/their signature(s) on the instrument the person(s), or the entity upon behalf of which the person(s) acted, executed the instrument.

I certify under PENALTY OF PERJURY under the laws of the State of California that the foregoing paragraph is true and correct.

WITNESS my hand and official seal.

Signature _____

(Seal)

TAXABLE YEAR

CALIFORNIA FORM

2023 Withholding Exemption Certificate 590

The payee completes this form and submits it to the withholding agent. The withholding agent keeps this form with their records.

Withholding Agent Information

Name

Payee Information

Name

☐ SSN or ITIN ☐ FEIN ☐ CA Corp no. ☐ CA SOS file no.

Address (apt./ste., room, PO box, or PMB no.)

City (If you have a foreign address, see instructions.) | State | ZIP code

Exemption Reason

Check only one box.

By checking the appropriate box below, the payee certifies the reason for the exemption from the California income tax withholding requirements on payment(s) made to the entity or individual.

☐ **Individuals — Certification of Residency:**
I am a resident of California and I reside at the address shown above. If I become a nonresident at any time, I will promptly notify the withholding agent. See instructions for General Information D, Definitions.

☐ **Corporations:**
The corporation has a permanent place of business in California at the address shown above or is qualified through the California Secretary of State (SOS) to do business in California. The corporation will file a California tax return. If this corporation ceases to have a permanent place of business in California or ceases to do any of the above, I will promptly notify the withholding agent. See instructions for General Information D, Definitions.

☐ **Partnerships or Limited Liability Companies (LLCs):**
The partnership or LLC has a permanent place of business in California at the address shown above or is registered with the California SOS, and is subject to the laws of California. The partnership or LLC will file a California tax return. If the partnership or LLC ceases to do any of the above, I will promptly inform the withholding agent. For withholding purposes, a limited liability partnership (LLP) is treated like any other partnership.

☐ **Tax-Exempt Entities:**
The entity is exempt from tax under California Revenue and Taxation Code (R&TC) Section 23701 _____ (insert letter) or Internal Revenue Code Section 501(c) _____ (insert number). If this entity ceases to be exempt from tax, I will promptly notify the withholding agent. Individuals cannot be tax-exempt entities.

☐ **Insurance Companies, Individual Retirement Arrangements (IRAs), or Qualified Pension/Profit-Sharing Plans:**
The entity is an insurance company, IRA, or a federally qualified pension or profit-sharing plan.

☐ **California Trusts:**
At least one trustee and one noncontingent beneficiary of the above-named trust is a California resident. The trust will file a California fiduciary tax return. If the trustee or noncontingent beneficiary becomes a nonresident at any time, I will promptly notify the withholding agent.

☐ **Estates — Certification of Residency of Deceased Person:**
I am the executor of the above-named person's estate or trust. The decedent was a California resident at the time of death. The estate will file a California fiduciary tax return.

☐ **Nonmilitary Spouse of a Military Servicemember:**
I am a nonmilitary spouse of a military servicemember and I meet the Military Spouse Residency Relief Act (MSRRA) requirements. See instructions for General Information E, MSRRA.

CERTIFICATE OF PAYEE: Payee must complete and sign below.

Our privacy notice can be found in annual tax booklets or online. Go to **ftb.ca.gov/privacy** to learn about our privacy policy statement, or go to **ftb.ca.gov/forms** and search for **1131** to locate FTB 1131 EN-SP, Franchise Tax Board Privacy Notice on Collection. To request this notice by mail, call 800.338.0505 and enter form code **948** when instructed.

Under penalties of perjury, I declare that I have examined the information on this form, including accompanying schedules and statements, and to the best of my knowledge and belief, it is true, correct, and complete. I further declare under penalties of perjury that if the facts upon which this form are based change, I will promptly notify the withholding agent.

Type or print payee's name and title _____ Telephone _____

Payee's signature ▶ _____ Date _____

County of El Dorado

OFFICE OF AUDITOR-CONTROLLER

360 FAIR LANE
PLACERVILLE, CALIFORNIA 95667
Phone: (530) 621-5487 FAX: (530) 295-2535

JOE HARN, CPA
Auditor-Controller

BOB TOSCANO
Assistant Auditor-Controller

PAYEE DATA RECORD

(Required in lieu of IRS W-9 when receiving payment from the County of El Dorado) Version: April 2014

PAYEE DATA RECORD

INSTRUCTIONS: Complete all information on this form. Sign, date, and return to the address shown at the bottom of this page. Prompt return of the **fully completed** form will prevent delays in processing payments. Information provided in this form will be used by the County of El Dorado to prepare Information Returns (Forms 1099), for withholding on payments to nonresident payees, and for reporting to the Employment Development Department (EDD).

NAME AND ADDRESS

Name (as shown on your income tax return)

Business name/Doing business as/Disregarded entity name, if different from above

Physical address (number, street, and apt. or suite)	Remittance address (if different than physical)
City, state, zip code	City, state, zip code

Phone number	Fax number (optional)	Email (optional)

FEDERAL TAX CLASSIFICATION & EXEMPTIONS

Check appropriate federal tax classification

○ Individual / sole proprietor ○ Partnership ○ Trust / estate ○ Other (see instructions) ► ____

○ C Corporation ○ S Corporation If you are a corporation, do you provide legal or medical services? ○ Yes ○ No

○ Limited liability company. Enter the tax classification (C=C Corporation, S=S Corporation, P=Partnership) ____

NOTE: IF YOU ARE A SINGLE MEMBER LLC (DISREGARDED ENTITY), ENTER THE TAX CLASSIFICATION OF THE OWNER IDENTIFIED ON THE NAME LINE.

Exempt payee code (if any) – see instructions ___ Exemption from FATCA reporting code (if any) – see instructions ___

TAX IDENTIFICATION NUMBER

Tax identification number (TIN)

Enter your TIN in the appropriate box. If you are an individual or sole proprietor, you must enter your SSN. You may choose to provide your EIN in addition to, but not instead of, the SSN. Single member LLCs (disregarded entities) must enter the TIN of the owner identified on the Name line.

Social Security Number

			-			-				

Employer Identification Number

		-							

RESIDENCY STATUS

Check appropriate box for residency status

○ California resident / exempt from nonresident withholding – qualified to do business in California or maintains a permanent place of business in California (attach CA Form 590)

○ California nonresident (see instructions)

NOTE: Payments to California **nonresidents** for services performed in California and for certain rents derived from properties located in California that exceed $1,500 in a calendar year will be subject to 7% nonresident withholding unless you have obtained a waiver or have been approved for reduced withholding by the Franchise Tax Board. There is no withholding on payments for product and for services performed outside of California.

☐ Obtained Franchise Tax Board waiver of State withholding (attach a copy if applicable)

☐ Obtained Franchise Tax Board approval for reduced withholding (attach a copy if applicable)

California sales tax permit number
(required only for California nonresident vendors that charge California sales tax)

CERTIFICATION

Under penalties of perjury, I certify that:
1) the TIN shown on this form is my correct taxpayer identification number (or I am waiting for a number to be issued to me) **and**
2) I am not subject to backup withholding **and 3**) I am a U.S. citizen or other U.S. person **and 4)** the FATCA code(s) entered on this form (if any) indicating that I am exempt from FATCA reporting is correct.

Authorized Payee Representative's Name (Type or Print)		**Title**
Signature	**Date**	**Telephone**

Should my residency status or any other information provided above change, I will promptly notify County of El Dorado at the address listed above.

RETURN FORM TO

Please return completed form to:

Department/office:	
Mailing address:	

Phone:		**Fax:**		**Email:**	

PAYEE DATA RECORD	A completed Payee Data Record is required for payments to all entities and will be kept on file at the County of El Dorado Auditor-Controller's Office. Payees who do not wish to complete the Payee Data Record may elect to not do business with the County of El Dorado. If the payee does not complete the form and the required payee data is not otherwise provided, payment may be reduced for federal backup withholding, California backup withholding and California nonresident withholding.
FEDERAL TAX CLASSIFICATION	Check the applicable federal tax classification. Note that if an LLC is disregarded as an entity separate from its owner, enter the appropriate tax classification of the owner identified on the "Name" line. **Individual:** Enter the name shown on your income tax return. If the account is in joint names, list first, and then circle, the name of the person or entity whose SSN you entered on the form. **Sole proprietor:** Enter your individual name as shown on your income tax return on the "Name" line. You may enter your business, trade, or "doing business as" name on the "Business name/Doing business as/Disregarded entity name" line. **Partnership, C Corporation, or S Corporation:** Enter the entity's name on the "Name" line and any business, trade, or "doing business as" name on the "Business name/Doing business as/Disregarded entity name" line. **Disregarded entity:** Enter the owner's name on the "Name" line. The name of the entity entered on the "Name" line should never be a disregarded entity. The name on the "Name" line must be the name shown on the income tax return on which the income should be reported. Check the appropriate box for the U.S. federal tax classification of the person whose name is entered on the "Name" line (individual/sole proprietor, partnership, C corporation, S corporation, trust/estate). **Limited liability company (LLC):** If the person identified on the "Name" line is an LLC, check the "Limited Liability Company" box only and enter the appropriate code for the U.S. federal tax classification. **Other entities:** Enter your business name as shown on required U.S. federal tax documents on the "Name" line. This name should match the name shown on the charter or other legal document creating the entity. You may enter any business, trade or DBA name on the "Business name/Doing business as/Disregarded entity name" line.
EXEMPTIONS	**Exemptions**: If you are exempt from backup withholding and/or FATCA reporting, enter in the exemptions box any code(s) that may apply to you. Generally, individuals (including sole proprietors) are not exempt from backup withholding. Corporations are exempt from backup withholding for certain payments, such as interest and dividends. Corporations are not exempt from backup withholding for payments made in settlement of payment card or third party network transactions. The following codes identify payees that are exempt from backup withholding: **1** – an organization exempt from tax under section 501(a), any IRA, or a custodial account under section 403(b)(7) if the account satisfies the requirements of section 401(f)(2); **2** – The United States or any of its agencies or instrumentalities; **3** – A state, the District of Columbia, a possession of the United States, or any of their political subdivisions or instrumentalities; **4** – A foreign government or any of its political subdivisions, agencies, or instrumentalities; **5** – A corporation; **6** – A dealer in securities or commodities required to register in the United States, the District of Columbia, or a possession of the United States; **7** – A futures commission merchant registered with the Commodity Futures Trading Commission; **8** – A real estate investment fund; **9** – An entity registered at all times during the tax year under the Investment Company Act of 1940; **10** – A common trust fund operated by a bank under section 584(a); **11** – A financial institution; **12** – A middleman known in the investment community as a nominee or custodian; **13** – A trust exempt from tax under section 664 or described in section 4947. **Exemption from FATCA reporting**. The following codes identify payees that are exempt from reporting under FATCA. These codes apply to persons submitting this form for accounts maintained outside of the United States by certain foreign financial institutions. Therefore, if you are only submitting this form for an account you hold in the United States, you may leave this field blank. Consult with the person requesting this form if you are uncertain if the financial institution is subject to these requirements. **A**—An organization exempt from tax under section 501(a) or any individual retirement plan as defined in section 7701(a)(37); **B**—The United States or any of its agencies or instrumentalities; **C**—A state, the District of Columbia, a possession of the United States, or any of their political subdivisions or instrumentalities; **D**—A corporation the stock of which is regularly traded on one or more established securities markets, as described in Reg. section 1.1472-1(c)(1)(i); **E**—A corporation that is a member of the same expanded affiliated group as a corporation described in Reg. section 1.1472-1(c)(1)(i); **F**—A dealer in securities, commodities, or derivative financial instruments (including notional principal contracts, futures, forwards, and options) that is registered as such under the laws of the United States or any state.
TAX IDENTIFICATION NUMBER	Enter your tax identification number (TIN) in the appropriate box. If you are a single member LLC that is disregarded as an entity separate from its owner, enter the owner's SSN (or EIN, if the owner has one). Do not enter the disregarded entity's EIN. If the LLC is classified as a corporation or partnership, enter the entity's EIN. **The TIN for individuals and sole proprietors is the Social Security Number (SSN).** Sole proprietors may provide their EIN in addition to but not instead of a SSN. The County of El Dorado requires that all parties entering into business transactions that may lead to payment(s) from the County provide their Taxpayer Identification Number (TIN). The TIN is also required by the California Revenue and Taxation Code Section 18646 to facilitate tax compliance enforcement activities and the preparation of Form 1099 and other information returns as required by the Internal Revenue Code Section 6109(a).
RESIDENCY STATUS	**Are you a California resident or nonresident?** A **corporation** will be defined as a "resident" if it has a permanent place of business in California or is qualified through the Secretary of State to do business in California. A **partnership** is considered a resident partnership if it has a permanent place of business in California. An **estate** is a resident if the decedent was a California resident at time of death. A **trust** is a resident if at least one trustee is a California resident. For **individuals** and **sole proprietors**, the term "resident" includes every individual who is in California for other than a temporary or transitory purpose and any individual domiciled in California who is absent for a temporary or transitory purpose. Generally, an individual who comes to California for a purpose that will extend over a long or indefinite period will be considered a resident. However, an individual who comes to perform a particular contract of short duration will be considered a nonresident. **Payments to all nonresidents may be subject to withholding.** Nonresident payees performing services in California or receiving certain rent, lease, or royalty payments from property (real or personal) located in California will have 7% of their total payments withheld for State income taxes. However, no withholding is required if total payments to the payee are $1,500 or less for the calendar year or if payment is for product. Nonresidents who have been granted a waiver on payments of California source income from the California Franchise Tax Board must submit a copy of the waiver. For information on Nonresident Withholding, contact the Franchise Tax Board at the numbers listed below: Withholding Services and Compliance Section: 1-888-792-4900 E-mail address: wscs.gen@ftb.ca.gov For hearing impaired with TDD, call: 1-800-822-6268 Website: www.ftb.ca.gov California nonresidents charging California sales tax are required to provide their California sales tax number.
CERTIFICATION	Provide the name, title, signature, and telephone number of the authorized individual completing this form. Provide the date the form was completed. **NOTE**: You must cross out item 2 in the certification block if you have been notified by the IRS that you are currently subject to backup withholding because you have failed to report all interest and dividends on your tax return.

CERTIFICATE OF INSURANCE FORM FOR CONTRACTORS, ARCHITECTS AND/OR ENGINEERS

CERTIFICATE ISSUER PHONE ( )	DATE EXECUTED: THIS CERTIFICATE DOES NOT AMEND, EXTEND, OR ALTER THE COVERAGE AFFORDED BY THE POLICIES BELOW. COMPANIES AFFORDING COVERAGE		
INSURED PHONE ( )	COMPANY A LETTER COMPANY B LETTER COMPANY C LETTER COMPANY D LETTER COMPANY E LETTER	COMPANY RATING COMPANY RATING COMPANY RATING COMPANY RATING COMPANY RATING	
PROJECT DESCRIPTION PROJECT TITLE: PROJECT NUMBER: LOCATION:			

THIS IS TO CERTIFY that policies of insurance listed below have been issued to the insured named above for the policy period indicated. Notwithstanding any requirement, term or condition of any contract or other document with respect to which this certificate may be issued or may pertain, the insurance afforded by the policies described herein is subject to all the terms, exclusion and conditions of such policies.

CL	Type of Insurance Coverage	Policy Number	Policy Effective Date	Policy Expiration Date	Limits of Liability (in Thousands)
	GENERAL LIABILITY [ ] Commercial General Liability [ ] Occurrence [ ] Claims Made [ ] Owner's & Contractor's Protective [ ] General Aggregate * [ ] Per Project [ ] Per Location				GENERAL AGGREGATE $ PRODUCTS-COMP/OPS AGGREGATE $ PERSONAL & ADVERTISING INJURY $ EACH OCCURRENCE $ FIRE DAMAGE (ANY ONE FIRE) $ MEDICAL EXPENSES (ANY ONE PERSON) $ DEDUCTIBLE $
	ARCHITECT'S AND/OR ENGINEER'S PROFESSIONAL LIABILITY [ ] Claims Made [ ] Project				GENERAL AGGREGATE $ EACH CLAIM $ DEDUCTIBLE $
	AUTOMOBLE LIABILITY [ ] Any Auto [ ] All Owned Autos [ ] Scheduled Autos [ ] Hired Autos [ ] Non-Owned Autos [ ] Garage Liability				 COMBINED SINGLE LIMIT $ BODILY INJURY (PER PERSON) $ BODILY INJURY (PER ACCIDENT) $ PRPERTY DAMAGE $ DEDUCTIBLE $
	EXCESS LIABILITY [ ] Umbrella Form [ ] Other Than Umbrella Form				 EACH OCCURRENCE $ AGGREGATE $
	[ ] WORKER'S COMPENSATION				----------STATUTORY----------
	EMPLOYER'S LIABILITY				(EACH ACCIDENT) $ (DISEASE - POLICY LIMIT) $ (DISEASE - EACH EMPLOYEE) $
	OTHER [ ] Installation Floater [ ] Builder's Risk [ ]				 $ $ $

* The General Aggregate limit, under Limits of Insurance, applies separately to each of the projects away from premises owned by or rented by you.

DESCRIPTION OF OPERATIONS/LOCATIONS/VEHICLES/SPECIAL ITEMS/ADDITIONAL INSURED:
The County of El Dorado its officers, officials, employees and volunteers are made additional insured, but only insofar as the operations under this contract are concerned.
OTHER ADDITIONAL ISSURED:

CERTIFICATE HOLDER	SHOULD ANY OF THE ABOVE DESCRIBED POLICIES BE CANCELLED OR TERMINATED BEFORE THE EXPIRATION DATE THEREOF, THE ISSUING COMPANY WILL GIVE THIRTY (30) CAYS WRITTEN NOTICE TO THE CERTIFICATE HOLDER NAMED TO THE LEFT, IN ADVANCE OF THE EFFECTIVE DATE OF SUCH CANCELLATION OR TERMINATION.
	AUTHORIZED REPRESENTATIVE SIGNATURE, TITLE, TYPED NAME, SSN AND PHONE NUMBER:

UNION MINE WASTEWATER TREATEMENT FACILITY
HEADWORKS CONSTRUCTION PROJECT

BID #24-0056

CONDITIONS OF THE CONTRACT

ARTICLE 1

GENERAL PROVISIONS

1.1 BASIC DEFINITIONS

1.1.1 County: The County of El Dorado, a political subdivision of the State of California.

1.1.2 Owner: The County of El Dorado is the Owner and is identified as the Owner in the Contract and these Contract Conditions. The term Owner, and pronouns in place of the same shall mean the County of El Dorado acting by and through its duly authorized representative.

1.1.3 Owner's Representative: The Environmental Management Department, Department Head, or designated representative.

1.1.4 Architect: The person holding a valid California State Architect's license, whose firm has been designated within the Contract Documents as the Architect to provide services on the Project. When the Architect is referred to within the Contract Documents and no Architect has in fact been designated, then the matter shall be referred to the County and shall be interpreted as Owner's Representative.

1.1.5 Project Manager: Project Manager or such other designated representative of the Owner. The Project Manager has such duties and authority as may be set forth in the Contract Documents.

1.1.6 Contractor: The person or entity identified as such in the Contract and is referred to throughout the Contract Documents as if singular in number. The term Contractor refers to the Contractor or the Contractor's authorized representative.

1.1.7 Inspector: The individual designated by the Owner as the Inspector as set forth in Paragraph 2.1.2.

1.1.8 Subcontractor: Those contractors, of whatever tier, furnishing labor or material, or both, for the Work under the Contract with the Contractor.

1.1.9 Substantial Completion: The stage in the progress of the Work when the Work or designated portion thereof is sufficiently complete in accordance with the Contract Documents so the Owner can occupy or utilize the Work for its intended use.

1.1.10 Final Acceptance: Conditions upon which the County will accept Work as satisfactorily completed in accordance with the Contract Documents. Requirements include, but are not limited to:

1. All Systems having been tested and accepted as having met requirements of the Contract Documents.
2. One (1) PDF format and one (1) hard copy of all as-builts, manufacturer's product data and maintenance manuals having been submitted by the Contractor and reviewed and accepted by the Owner.
3. All punch list work, as directed by the Owner, having been completed by the Contractor.
4. Acceptance of the Work by the Owner.

1.1.11 Final Payment: The Final Payment shall be the only Payment made to Contractor and shall not be considered to be the payment of any or all of the retention.

1.1.12 Architect's Supplemental Instructions/Instruction Bulletins: A written order of the Architect and reviewed by the Owner's Representative directing the Contractor to provide supplemental instructions, interpretations, or conduct minor changes in work involving neither extra cost nor extra time and being consistent with the scope and functioning of the project, if applicable.

1.1.13 Construction Change Directive: A written order issued by the Owner directing a change in the Work and stating a proposed basis for adjustment, if any, of Contract Time or Sum. The Owner may by Change Directive, without invalidating the Contract and without Contractor's agreement, order changes in the Work. This procedure will be used in the absence of agreement between Owner and Contractor, for subsequent inclusion in a Change Order.

1.1.14 Change Order: A Change Directive signed by the Owner and Contractor stating their agreement upon all of the following: 1) a change in the Work, 2) the amount of the adjustment in the Contract Price, if any, and 3) the extent of the adjustment in the Contract Time, if any.

1.1.15 Contract Documents: The Contract Documents shall include the documents described in Article 2 of the Contract, including Architect's Supplemental Instructions, Construction Change Directives, and Change Orders.

1.1.16 Work: The construction and services required by the Contract Documents, including all labor, materials, equipment and services provided or to be provided by the Contractor to fulfill the Contractor's obligations.

1.1.17 Project: The total construction of the Work performed under the Contract Documents.

1.1.18 Plans: The graphic and pictorial portions of the Contract Documents, wherever located and whenever issued, showing the design, location and dimensions of the Work, generally including plans, elevations, sections, details, schedules, and diagrams, specifically the plans and specifications for this Project.

1.1.19 Claim: A demand or assertion by the Contractor seeking, as a matter of right, adjustment or interpretation of Contract terms, payment of money, extension of time, or other relief with respect to the terms of the Contract. Claims must be made by written notice and shall include a demand for the Owner's decision. The responsibility to substantiate claims and to resolve the claims of subcontractors of whatever tier shall rest with the Contractor.

1.1.20 Work Not Included: Except for such auxiliary work as shown or specified, or is necessary as part of the construction, the following is NOT included in this contract: Any work shown but marked "Not in Contract" (NIC) or otherwise designated to be done under another contract or by Owner.

1.1.21 Furnish (material): To supply and deliver to the project ready for installation and in operating condition.

1.1.22 Install (Service or Labor): To place in final position, complete, anchored, connected, and in operable condition with respect to required codes and/or governing agency requirements.

1.1.23 Provide: To furnish and install complete. When "Furnish", "Install", or "Provide" is stated, "Provide" is implied.

1.1.24 Construct: To "Furnish" materials to "Install" in final position, complete, anchored, and connected with respect to required codes, requirements, Contract Documents, and details.

1.1.25 Day(s): All references to "day" or "days" in these Contract Documents shall be defined as calendar-day or calendar-days.

1.1.26 Normal Working Hours: Includes the hours from 6:00 a.m. to 6:00 p.m., Pacific Time, Monday through Friday, except for County-recognized holidays.

1.1.27 Contract: The Agreement for Construction Services between Contractor and Owner.

1.2 CONTRACT DOCUMENTS

1.2.1 One Document: The Contract Documents are one document and any work shown or mentioned shall be performed or furnished. The Contractor admits and agrees that the Contract Documents exhibit the intent and purpose of the Owner in regard to the Work, and that they are not complete in every detail and are to be considered as showing the purpose and intent only; and Contractor further agrees to furnish all labor or material for any detail that is necessary to carry out the intent and purpose of the Specifications without extra charge.

1.2.2 Misuse of Words or Punctuation: The misplacement, addition, or omission of any word, letter, or punctuation mark will not in any way change the intent or meaning of the Contract Documents. Any part of the Work, or any article pertaining thereto which is not specifically set forth in these Contract Documents, but which is necessary for the proper completion of the Work, is to be supplied and set in place at the Contractor's expense, the same as if it had been mentioned in these Contract Documents. The Contractor shall furnish all things necessary to make a good and workmanlike job in accordance with the intent and purpose of the Contract Documents.

1.3 ASSIGNMENT OF CONTRACT

1.3.1 Mutual Consent: Neither party to the Contract shall assign the Contract without the written consent of the other party, nor shall the Contractor assign any moneys due or to become due to him hereunder without the written consent of the Owner.

1.3.2 Assignment Under Anti-Trust Claims: In accordance with Government Code section 4552 and Public Contract Code section, Contractor and subcontractors shall conform to the following requirements:

1. In entering into a public works contract or a subcontract to supply goods, services, or materials pursuant to a public works contract, Contractor or subcontractors offers and agrees to assign to the Owner all rights, title, and interest in and to all causes of action it may have under Section 4 of the Clayton Act (15 U.S.C Section 15) or under the Cartwright Act, (Business and Professions Code section 16700, et seq.), arising from purchases of goods, services, or materials pursuant to the public works contract or the subcontract. This assignment shall be made and become effective at the time the Owner tenders Final Payment to the Contractor, without further acknowledgment by the parties.

2. If an awarding body or public purchasing body receives, either through judgment or settlement, a monetary recovery for a cause of action assigned under Government Code sections 4550-4554, the assignor shall be entitled to receive reimbursement for actual legal costs incurred and may, upon demand, recover from the public body any portion of the recovery, including treble damages, attributable to overcharges that were paid by the assignor but were not paid by the public body as part of the bid price, less the expenses incurred in obtaining that portion of the recovery. Upon demand in writing by the assignor, the assignee shall, within one year from such demand, reassign the cause of action assigned under Government Code sections 4550-4554 if the assignor has been or may have been injured by the violation of law for which the cause of action arose and (a) the assignee has not been injured thereby, or (b) the assignee declines to file a court action for the cause of action.

1.4 WAIVER OF "COMMON PRACTICE"

1.4.1 The Contractor shall waive "common practice" and "common usage" as construction criteria wherever the Contract Documents details, plans, technical specifications, governing codes, or ordinances require greater quantity or better quality than common practice or common usage would require.

1.5 EXCESSIVE COSTS

1.5.1 Failure to Comply with Contract: If Contractor fails to comply with any Contract requirements, including any required coordination with other contractors, and that failure results in additional costs to Owner, then Contractor shall be liable for such additional costs.

1.5.2 Construction Methods: If Contractor's construction methods and techniques result in additional costs to Owner, after notice, such Contractor shall be responsible for cost attributable to his methods and techniques.

ARTICLE 2
OWNER

2.1 OWNER'S REPRESENTATIVE

2.1.1 Owner Representative: The Owner will be represented by the Owner's Representative who shall oversee the performance of the Contract on behalf of the Owner.

2.1.2 Owner May Appoint Inspector: Owner shall be entitled to appoint an agent as Inspector who shall see that the performance of the Work is in strict accordance with the Contract Documents on behalf of the Owner.

2.1.3 Communication: In order that the Owner may act upon expert advice and upon good procedure, all communications from the Contractor shall be in writing and will be through said Owner's Representative or Inspector, as the Owner may direct, and all communications and instructions from the Owner to the Contractor will be so routed. The Owner reserves the right to alter this procedure without the consent of the Contractor. All communications not in compliance herewith, shall be considered non-binding on the Owner.

2.2 RIGHTS OF OWNER

2.2.1 Right to Clean Up: Subject to the strict prohibition against maintaining a nuisance, if a dispute arises between the Contractor, Subcontractors, or separate contractors as to the responsibility under their respective Contracts for maintaining the premises and surrounding area free from waste materials and rubbish the Owner may, but need not, clean up and allocate the cost among those responsible as the Inspector determines to be just.

2.2.2 Right to Accept Imperfect Work: If any part or portion of the Work completed under this Contract is defective and not in accordance with the Plans or Contract Documents, and if the imperfection is judged by Owner to be not of sufficient magnitude or importance so as to make the Work unacceptable, then Owner shall have the right and authority to retain such Work but will make such deductions in Contract Price as may be equitable and reasonable. However, Owner does not by this section; waive any other rights provided for herein.

2.2.3 Right to do Adjacent Work: The Owner reserves the right to perform construction or operations on the site of the Work. In doing this Owner may use its own forces or award separate contracts in connection with other construction or operations on the site but not covered by the Contract Documents. Contractor shall defend, indemnify, and hold Owner harmless for costs incurred by Owner that are payable to a separate contractor because of delays, improperly timed activities, or defective construction by the Contractor, unless such costs are incurred due to the sole or active negligence of Owner.

2.2.4 Right to Finish Contractor's Work: If the Contractor defaults or neglects to carry out all or any part of the Work in accordance with the Contract Documents, the Owner has the right, exercisable solely at Owner's discretion, to commence and continue completion of the Work with diligence and promptness. In such an event, if the Owner's cost to complete to Work exceeds the remaining balance of the Contract with the Contractor, Contractor shall reimburse the Owner for such excess costs.

2.2.5 Right of Partial Use of Project: The Owner may occupy or use any completed or partially completed portion of the Work at any stage, upon agreement of Owner and Contractor.

1. Such partial occupancy or use may commence whether or not the portion is substantially complete, provided the Owner and Contractor have accepted in writing the responsibilities assigned to each of them for payments, retainage if any, security, maintenance, heat, utilities, damage to work and insurance, and have agreed in writing concerning the period for correction of the Work and commencement of warranties required by the Contract Documents.

2. Consent of the Contractor to partial occupancy or use shall not be unreasonably withheld.

3. Immediately prior to such partial occupancy or use, the Owner and Contractor shall jointly inspect the area to be occupied or portion of the Work to be used in order to determine and record the condition of the Work.

4. Unless otherwise agreed upon in writing, partial occupancy or use of a portion or portions of the Work shall not constitute acceptance of work not complying with the requirements of the Contract Documents.

5. No claim for acceleration, delay, or hindrance, may be made by Contractor on his own behalf or that of any of his subcontractors, for any delays, accelerations, or hindrances that may arise out of Owner's partial occupancy of the Project.

2.2.6 Right to Audit: Contractor shall maintain and make available to the County, State Auditor, or to any of their duly authorized representatives all books, papers, job cost records, detailed cost estimates, claims, and accounts, including payment, property, payroll, personnel, subcontractor records, and financial records related to or which arise out of the Work or under terms of this Contract. Contractor shall maintain such books, records, data and documents in accordance with generally accepted accounting principles and in accordance with these Contract Conditions and federal and state requirements. These books, papers, records, claims, and accounts shall be made available for examination during normal business hours and shall be readily available and accessible at Contractor's principal place of business in California, for audit during normal business hours at such place of business. Contractor shall provide office space, photocopies and other assistance to enable audit or inspection representatives to conduct such audits or inspections. This right to audit books and records directly related to this Contract shall also extend to any first-tier subcontractors employed under this Contract. Contractor shall incorporate this provision in any subcontract entered into as a result of this Contract and shall require its subcontractors to agree to cooperate with the above-listed agencies by making all appropriate and relevant Project records available to those agencies for audit and copying.

All of Contractor's books, papers, job cost records, detailed cost estimates, claims, and accounts, including payment, property, payroll, personnel, subcontractor records, and financial records related to or which arise out of the work or under terms of this Contract shall be retained for access, inspection and/or audit by the County, the State Auditor, or their duly authorized representatives for at least three (3) years after County's final payment to Contractor and/or the final resolution of any claims under this Contract. Contractor shall incorporate this provision in any subcontract entered into as a result of this Contract.

2.3 RESPONSIBILITIES OF OWNER

2.3.1 Removal, Relocation, or Protection of Underground Infrastructure: If the Contractor while performing the contract discovers utility facilities not identified by the Owner in the contract plans or specifications, Contractor shall immediately notify the Owner in writing. Owner shall have the sole discretion to perform the repairs or relocation work itself, or to permit the Contractor to do such repairs or relocation work at a reasonable price. In the event that the Owner authorizes the Contractor to perform the work, the parties shall proceed with a written Change Order as set forth in Article 5 herein. Compensation to the Contractor for said costs shall be in accordance with Government Code section 4215.

Nothing herein shall be construed to require the Owner to locate the presence of any existing services not expressly included in Government Code section 4215, nor to limit the Owner's rights or remedies set forth therein.

In accordance with the provisions of Government Code section 4215, Contractor shall not be assessed liquidated damages for delay in completion of the project, when such delay was caused by the failure of the Owner or owner of the utility to provide for the removal or relocation of such utility facilities.

ARTICLE 3

CONTRACTOR'S RESPONSIBILITIES

3.1 REVIEW OF CONTRACT DOCUMENTS AND FIELD CONDITIONS

3.1.1 Reporting Errors in Contract Documents: The Contractor shall carefully study and compare the Contract Documents with each other and shall at once report to the Inspector errors, inconsistencies, or omissions discovered. If the Contractor performs any construction activity knowing it involves a recognized error, inconsistency, or omission in the Contract Documents without such notice to the Owner, the Contractor shall assume responsibility for such performance and shall bear all costs for correction.

3.1.2 Reporting Errors in Field Conditions: The Contractor shall take field measurements and verify field conditions and shall carefully compare such field measurements and conditions and other information known to the Contractor with the Contract Documents before commencing activities. Errors, inconsistencies, or omissions discovered shall be reported to the Owner at once.

3.1.3 No Implied Warranty: No warranty is to be implied nor shall any warranty arise by operation of law, or by interpretation of this Contract, that the Plans and Contract Documents are adequate and sufficient to construct the Project.

3.2 SUPERVISION AND CONSTRUCTION PROCEDURES

3.2.1 Supervision of Work: The Contractor shall supervise and direct the Work, using the Contractor's best skill and attention. The Contractor shall be solely responsible for and have control over construction means, methods, techniques, sequences, and procedures and for coordinating all portions of the Work under the Contract, unless Contract Documents give other specific instructions concerning these matters.

3.2.2 Acts of Employees and Agents: The Contractor shall be responsible to the Owner for acts and omissions of the Contractor's employees, subcontractors and their agents and employees, and other persons performing portions of the Work under a contract with the Contractor.

3.2.3 Acts Do Not Waive Contractor's Obligation: The Contractor shall not be relieved of obligations to perform the Work in strict accordance with the Contract Documents either by activities or duties of the Owner's Representative or the Inspector in the administration of the Contract, or by tests, inspections, or approvals required or performed by persons other than the Contractor.

3.3 PROSECUTION OF WORK

3.3.1 Time of the Essence: It is expressly understood and agreed that the time of beginning, rate of progress, and time of completion of the Work are of the essence. The time for substantial completion of this contract shall be **two (2) years**, commencing from the date shown on the Contractor Notice to Proceed. No work shall begin prior to the issuance of a Contractor Notice to Proceed.

3.3.2 Owner and Contractor recognize that time is of the essence of the Agreement and that Owner will suffer financial loss if the Work is not completed within the times specified, plus any extensions thereof. They also

recognize the delays, expense, and difficulties involved with proving in a legal proceeding the actual loss suffered by Owner if the Work is not completed on time. Accordingly, instead of requiring any such proof, Owner and Contractor agree that Contractor shall pay Owner the sum of **Six Hundred Dollars ($600) per day**, as liquidated damages and not as a penalty, for each and every calendar day's delay in finishing the Work in excess of the contract time prescribed herein.

3.3.3 Work During Operational Hours: The Facility will be operational during the Work. The Contractor shall not interfere or hinder government center operations. The Contractor shall keep all equipment and materials within designated work areas and out of hallways and doorways. Emergency exit routes shall be maintained at all times.

3.3.4 Construction Schedule: The Contractor shall coordinate the final critical path method (CPM) construction schedule, if applicable, with the Owner. The CPM schedule is required to be submitted within five (5) calendar days of issuance of Notice to Proceed. The CPM schedule will be for Owner's information only. Silence or inaction with regard to Contractor's schedule shall not be construed as acquiescence or acceptance of the schedule as being binding on Owner. Contractor's schedule shall provide for the completion date not to exceed nor shall it provide for the completion date earlier than the time limits for completion set forth in the Contract Documents. Float, whether for the entire Project or for specific tasks therein, shall be deemed to be for the benefit of the Owner. The Contractor shall keep the construction schedule current, and shall submit weekly updates to the Owner's Representative and Inspector, if any. The Contractor shall further prepare and keep current a schedule of submittals which is coordinated with the construction schedule, and which allows the Owner reasonable time to review the submittals.

3.4 SUBMITTALS

3.4.1 Use of Listed Manufacturers; Review of "Or Equals": Contractor shall utilize only the manufacturer designated in its Proposal for major equipment items listed therein. In accordance with the provisions of Public Contract Code section 3400, but subject to subsection (b) thereof, if requesting approval of an "or equal" product, Contractor shall within two (2) business days following the bid opening submit data substantiating its request. Failure to submit such substantiating data within two (2) business days following the bid opening shall constitute submission of a non-responsive bid.

3.5 STATE AND FEDERAL LABOR REQUIREMENTS

3.5.1 Hours of Work:

1. Eight (8) hours of labor shall constitute a legal day's work upon all work done hereunder, and it is expressly stipulated that no workman employed at any time by the Contractor, or by any subcontractor under this Contract, upon the Work, shall be required or permitted to work thereon more than eight (8) hours in any one (1) calendar day and/or more than forty (40) hours in any one (1) calendar week except as provided in Labor Code section 1815, and it is further expressly stipulated that for each and every violation of said last named stipulation, said Contractor shall forfeit, as penalty to the said Owner, $25.00 for each workman employed in the execution of this Contract, or by any subcontractor under this Contract, for each calendar day during which said workman is required or permitted to labor more than eight (8) hours in any one (1) calendar day or more than forty (40) hours in any one (1) calendar week in violation of the provisions of said Labor Code.

2. In accordance with the provisions of Labor Code section 1776, the Contractor, and each subcontractor, shall also keep an accurate record showing the names and actual hours worked for all workers employed by him in connection with the Work contemplated by the Agreement, which record shall be open at all reasonable hours to the inspection of the Owner or its officers or agents, and to the Chief of the Division of Labor Statistics and Law Enforcement or the Department of Industrial Relations, his deputies or agents.

3.5.2 Apprentice Employment:

1. Pursuant to the provisions of Labor Code section 1777.5, the Contractor or subcontractor employing tradesmen in any apprenticeable occupation shall apply to the joint apprenticeship committee nearest the site of the public works project and which administers the apprenticeship program in that trade for a Certificate of Approval. The certificate will also fix the ratio of apprentices to journeymen that will be used in the performance of the Contract. All requirements and exceptions to those requirements set forth herein for Apprenticeship Employment are contained in Labor Code section 1777.5 and are available from the applicable Joint Apprenticeship Committee.

2. The Contractor shall make contributions to funds established for the administration of the apprenticeship programs if he employs registered apprentices or journeymen in any apprenticeable trade on such contracts and if other contractors on the public works site are making such contributions.

3. The Contractor and any subcontractor under him shall comply with the requirements of Labor Code sections 1777.5 and 1777.6 in the employment of apprentices. Information relative to apprenticeship standards, wage schedules, and other requirements may be obtained from the Director of Industrial Relations, ex officio the Administrator of Apprenticeship, San Francisco, California, or from the Division of Apprenticeship Standards and its branch offices.

3.5.3 Wage Rates:

1. Pursuant to Labor Code section 1770 et seq., each laborer or mechanic of Contractor or any subcontractor engaged in work on the Project under this Contract shall be paid not less than the hourly wage rate of per diem wages set forth in the prevailing wage rate schedule published by the Director of Industrial Relations regardless of any contractual relationship which may be alleged to exist between Contractor or any subcontractor and such laborers and mechanics.

2. Any laborer or mechanic employed to perform work on the Project under this Contract, which work is not covered by any of the foregoing classifications, shall be paid not less than the prevailing rate of per diem wages specified herein for the classification which most nearly corresponds to the work to be performed by him.

3. The foregoing specified prevailing wage rates are minimum rates only, and the Contractor may pay any wage rate in excess of the applicable rate contained in this Contract.

4. Pursuant to Labor Code section 1775, the Contractor as a penalty to the Owner shall forfeit $50.00 for each calendar day, or portion thereof for each worker paid less than prevailing rate established by the Department of Industrial Relations for such work or craft in which such worker is employed. The difference between such prevailing wage rates and the amount paid to each worker for each calendar day or portion thereof for which the worker was paid less than the prevailing wage rate shall be paid to each worker by the Contractor.

5. An error on the part of an awarding body does not relieve the Contractor from responsibility for payment of the prevailing rate of per diem wages and penalties pursuant to Labor Code sections 1770 - 1775.

6. All Contractors and subcontractors are subject to the provisions of Labor Code sections 1810-1814 which provide that the maximum hours a worker is to be employed is limited to eight (8) hours a day and forty (40) hours a week and the Contractor or subcontractor shall forfeit, as a penalty, $25.00 for each worker employed in the execution of the Contract for each calendar day during which a worker is required or permitted to labor more than eight (8) hours in any calendar day or more than forty (40) hours in any calendar week and is not paid overtime.

7. Labor Code section 1815 requires that not withstanding the provisions of sections 1810-1814, employees of Contractors who work in excess of eight (8) hours per day and forty (40) hours per week shall be compensated for all hours worked in excess of eight (8) hours per day at not less than 1-1/2 times the basic rate of pay.

8. In the case of federally funded projects, where federal and state prevailing wage requirements apply, compliance with both is required. This project is funded in whole or part by federal funds. Contractor's attention is directed to the requirements of, and compliance with the Copeland Act (18 U.S.C. 874 and 29 CFR Part 3), the Davis-Bacon Act (40 U.S.C. 276a to 276a-7 and 29 CFR Part 5), and the Contract Work Hours and Safety Standards Act (40 U.S.C. 327-330 and 29 CFR Part 5).

9. If there is a difference between the minimum wage rates predetermined by the Secretary of Labor and the general prevailing wage rates determined by the Director of the California Department of Industrial Relations for similar classifications of labor, Contractor and subcontractors shall pay not less than the higher wage rate. The Department will not accept lower State wage rates not specifically included in the Federal minimum wage determinations. This includes "helper" (or other classifications based on hours of experience) or any other classification not appearing in the Federal wage determinations. Where Federal wage determinations do not contain the State wage rate determination otherwise available for use by Contractor and subcontractors, Contractor and subcontractors shall pay not less than the federal minimum wage rate which most closely approximates the duties of the employees in question.

10. Interested parties can obtain the current wage information by submitting requests to the Department of Industrial Relations, Division of Labor Statistics and Research, PO Box 420603, San Francisco CA 94142-0603, Telephone (415) 703-4708 or by referring to the website at http://www.dir.ca.gov/dlsr/PWD. The rates at the time of the bid advertisement date of a project will remain in effect for the life of the project in accordance with the California Code of Regulations, as modified and effective January 27, 1997.

11. The prevailing wage rates that are in effect at the time of the bid closing will be attached to the resulting contract for the Contractor's records. Copies of the applicable state prevailing wage rates are on file with the County of El Dorado, Environmental Management Department, 2850 Fairlane Court, Placerville, California 95667, and they are available to any interested party on request.

3.5.4 Certified Payroll: As required under the provisions of Labor Code section 1776 Contractor and subcontractors shall keep accurate payroll records:

1. The payroll records shall show the name, address, social security number, work classification, straight time and overtime hours worked each day and week, and the actual per diem wages paid to each journeyman, apprentice, worker, or other employee by him or her in connection with the Project.

2. A certified copy of all payroll records enumerated above shall be available for inspection at all reasonable hours at the principal office of the Contractor as follows:

   a. Make available or furnish to the employee or his or her authorized representative on request.

   b. Make available for inspection or furnished upon request to a representative of the Owner, the Division of Labor Standards Enforcement, and the Division of Apprenticeship Standards of the Department of Industrial Relations.

   c. Make available upon request by the public for inspection or copies thereof made; provided, however, that a request by the public shall be made through either the Owner, the Division of Labor Standards Enforcement, or the Division of Apprenticeship Standards. The requesting party shall, prior to being provided the records, reimburse the costs of preparation by the Contractor, subcontractor, and the entity through which the request was made. The public shall not be given access to the records at the principal office of the Contractor.

3.5.5 Discrimination In Employment: No discrimination shall occur in the employment of persons upon the Work because of race, color, sex, national origin, or ancestry or religion of such persons.

3.5.6 Convict-Made Materials: Except as may be provided by law, the Contractor agrees that no materials manufactured or produced in a penal or correctional institution shall be incorporated in the construction under this Contract.

3.6 TAXES

3.6.1 Contractor Pays Taxes: The Contractor and subcontractors shall pay all local, state, and federal taxes upon labor or materials involved in their branch of the Work, cost of same to be included in the Contract price.

3.7 COMPLIANCE WITH LAW AND LOCAL REQUIREMENTS

3.7.1 Regulations: The Contractor and all subcontractors shall conform to and abide by all city, county, and state laws, ordinances, rules, and regulations, as the same pertain to the Work contemplated by said Plans and Contract Documents.

3.7.2 Permits, Licenses, and Fees: The County shall procure and pay for all permits and inspection fees that may be required to commence, carry on, and complete the Contract. Contractor shall be responsible for all applicable license fees.

3.7.3 Patent Rights, Copyrights, Trade Names, and Royalties: The Contractor shall indemnify and save harmless the Owner and all persons acting under him for all liability on account of any patent rights, copyrights, or trade names which may affect the articles or materials or their application under the Contract Documents. The Contractor shall pay all royalties, or other charges that may arise, due to methods, types of construction, processes, materials or use of equipment, and shall hold the Owner harmless from any charges whatsoever which may arise, and shall furnish written assurance, satisfactory to the Owner, that such charges have been paid.

3.8 GUARANTEE

3.8.1 Final Guarantee: The Contractor shall guarantee all materials and equipment furnished and work performed for a period of one (1) year. Contractor warrants and guarantees for a period of one year from the date of the Notice of Acceptance that the Work is free from all defects due to faulty materials or workmanship and Contractor shall promptly make such corrections as may be necessary, including repairs of any damage to other parts of the Work resulting from such defects. Owner will give notice of observed defects with reasonable promptness. In the event that Contractor should fail to make such repairs, adjustments, or other work that may be made necessary by such defects within ten (10) calendar days after being notified in writing by Owner, Owner may do so and charge Contractor the cost thereby incurred.

3.8.2 Extended Guarantees: If a guaranty exceeding one year is provided by the supplier or manufacturer of any equipment used in this Project, then the guarantee for such materials shall be extended for such term. Contractor expressly agrees to act as co-guarantor of such equipment and materials, and Contractor shall supply Owner with all warranty and guaranty documents relative to equipment and materials incorporated in the job and guaranteed by their suppliers or manufacturers.

3.9 WARRANTY

3.9.1 Contract Warranty: The Contractor warrants to the Owner that materials and equipment furnished under the Contract will be of good quality and new, unless otherwise required or permitted by the Contract, that the Work will be free from defects or flaws and is of the highest quality of workmanship and that the Work will conform with the requirements of the Contract. Work not conforming to these requirements, including substitutions not properly approved and authorized, shall be considered defective.

3.10 INDEMNIFICATION

3.10.1 Owner Not Liable for Damages: The Owner or its authorized representative shall not in any way or manner be answerable or suffer loss, damage, expense, or liability for any loss or damage that may happen to said Work, or part thereof, or in or about the same during its construction and before acceptance and the said

Contractor shall assume all liabilities of every kind or nature arising from said Work, either by accident, negligence, theft, vandalism, or any cause whatever; and shall hold the Owner and its authorized representatives harmless from all liability of every kind and nature arising from accident, negligence, or any cause whatever, other than for the active negligence of the Owner, its officers, agents and employees.

3.10.2 Owner Not Liable for Debts: Indebtedness incurred for any cause in connection with this Work must be paid by the Contractor, and the Owner is hereby relieved at all times from any indebtedness or claim other than the Contract price.

3.10.3 Indemnity: To the fullest extent allowed by law, Contractor shall defend, indemnify, and hold the County and its officers, directors, and employees, harmless against and from any and all claims, suits, losses, damages, and liability for damages, including attorney's fees and other costs of defense brought for or on account of injuries to or death of any person, including but not limited to, workers and the public, or on account of injuries to or death of County employees or damage to property, or any economic, consequential or special damages which are claimed or which shall in any way arise out of or be connected with Contractor's services, operations or performance hereunder, regardless of the existence or degree of fault or negligence on the part of the County, the Contractor, subcontractors or employees of any of these, except for the active, or sole negligence of the County its officers and employees, or where expressly prescribed by statute.

The duty to indemnify and hold harmless the County specifically includes the duties to defend set forth in Civil Code section 2778 of the Civil Code. The insurance obligations of Contractor are separate, independent obligations under the Contract Documents, and the provisions of this defense and indemnity are not intended to modify nor should they be construed as modifying or in any way limiting the insurance obligations set forth in the Contract Documents.

Nothing herein shall be construed to seek indemnity in excess of that permitted by Civil Code section 2782, et seq. In the event any portion of this Article is found invalid, the Parties agree that this Article shall survive and be interpreted consistent with the provisions of Civil Code section 2782, et seq.

3.10.4 Environmental Indemnification: To the fullest extent allowed by law, from and after recording of the Notice of Acceptance, Contractor shall indemnify, defend, and save harmless Owner from all losses or damages resulting from injury to or death of any person and damage to property, and any fine, which is occasioned by or arises out of any breach of Environmental and Toxics Warranty, representations, or covenants of Contractor under this Contract. Contractor further agrees to indemnify and hold harmless Owner, its officers, employees, and agents, from and against any and all liability as follows:

1. Including all foreseeable and all unforeseeable consequential damages, directly or indirectly arising out of the use, generation, storage, or disposal of hazardous materials in any location by Contractor, and

2. Including, without limitation, the cost of any required or necessary repair, cleanup, or detoxification and the preparation of any closure or other required plans, whether such action is required or necessary prior to or following filing of the Notice of Acceptance to the full extent that such action is attributable, directly or indirectly, to the presence or use, generation, storage, release, threatened release, or disposal of hazardous materials by any person on the Project prior to filing of the Notice of Acceptance. Contractor's obligations pursuant to the foregoing indemnity shall survive the filing of the Notice of Acceptance of the Project.

3. This agreement as to indemnity and reimbursement as above set forth to be undertaken by the Contractor shall survive the performance of the remainder of said Contract and shall remain in full force and effect notwithstanding such performance.

4. The foregoing duties of indemnity shall not apply to loss, damage, expense, or liability caused solely by the active negligence of the Owner or the Owner's agents, servants or independent contractors.

3.11 WORK REQUIREMENTS

3.11.1 Conduct of Work: The Contractor shall confine the storage of his equipment and materials to limits as designated. He shall at all times exercise due caution and provide all necessary barricades and other safety equipment around the Work to protect the general public from injury to person and property during the entire time of performance of the Work. The Contractor shall not create excessive dust or noise.

3.11.2 Maintenance of Site: Strict prohibition against committing nuisances in or about the Work shall be maintained, and the Contractor shall not in any way obstruct or interfere with movements of traffic on any public right of way without first obtaining the necessary approval of the proper public agency.

3.11.3 Clean Up of Site: The Contractor shall keep the premises and surrounding area free from accumulation of waste materials or rubbish caused by operations under the Contract. At completion of the Work the Contractor shall remove from and about the Project waste materials, rubbish, the Contractor's tools, construction equipment, machinery, and surplus materials. If the Contractor fails to clean up as provided in the Contract Documents, the Owner may do so and the cost thereof shall be charged to the Contractor.

3.11.4 Cutting and Patching:

1. The Contractor shall be responsible for cutting, fitting, or patching required to complete the Work or to make its parts fit together properly.

2. The Contractor shall not damage or endanger a portion of the Work or fully or partially completed construction of the Owner or separate contractors by cutting, patching, or otherwise altering such construction, or by excavation. The Contractor shall not cut or otherwise alter such construction by the Owner or a separate contractor except with written consent of the Owner and of such separate contractor; such consent shall not be unreasonably withheld. The Contractor shall not unreasonably withhold from the Owner or a separate contractor the Contractor's consent to cutting or otherwise altering the Work.

3.12 SUBCONTRACTORS

3.12.1 Contractor Responsible for Subcontractor's Acts: Contractor shall be fully responsible to Owner for the acts and omissions of his subcontractors, and of persons either directly or indirectly employed by them, as he is for the acts and omissions of persons directly employed by him.

3.12.2 Contractor’s Subcontract: Contractor shall cause appropriate provisions to be inserted in all subcontracts relative to the Work to bind subcontractors to Contractor by the terms of the Contract Documents insofar as applicable to the Work of subcontractors and to give Contractor the same power as regards terminating any subcontract that Owner may exercise over Contractor under any provisions of the Contract Documents. The percentage of retention withheld from any subcontractor by the Contractor shall not exceed the percentage of retention withheld from the Contractor as provided herein.

3.12.3 Ineligible Subcontractor: Contractor is prohibited from performing work with a subcontractor who is ineligible to perform work pursuant to Labor Code section 1777.1 or 1777.7.

3.13 SUPERINTENDENT

3.13.1 Work Superintendent: The Contractor will employ and maintain on the worksite a qualified supervisor or Superintendent who shall have been designated in writing by the Contractor as the Contractor's representative at the sites. The Superintendent shall have full authority to act on behalf of the Contractor, and all communications given to the Superintendent shall be as binding as if given to the Contractor. The Superintendent shall be present on the site at all times as required to perform adequate supervision and coordination of the Work.

3.14 LABOR AND MATERIALS

3.14.1 Skilled Labor: All labor must be especially skilled for each kind of work, and must be thorough and first class in all respects. Any person whom the Inspector or Owner may deem incompetent or disorderly shall be promptly discharged from the Project and not re-employed.

3.14.2 Quality of Materials: All materials used on this Contract shall be new and the best market quality, unless specified or shown otherwise. All Work executed under this Contract shall be done in the best, most thorough, substantial and workmanlike manner and without flaws. All materials and labor shall be subject to the approval of the Inspector as to its quality and fitness, and shall be immediately removed if it does not meet with his approval. The Inspector may refuse to issue the Certificate for Payment until all defective materials or work have been removed and other material of proper quality substituted therefore. All removal and replacement with same shall be done at the Contractor's expense. Manufactured articles, materials, and equipment shall be applied, installed, connected, erected, used, cleaned, and conditioned as directed by the manufacturer.

ARTICLE 4

ADMINISTRATION OF CONTRACT

4.1 ADMINISTRATION OF CONTRACT

4.1.1 Contract Communications: Unless otherwise provided in the Contract or when direct communications have specifically been authorized, all parties shall communicate through the Owner's Representative or the Inspector if the Owner so directs. Communications by and with the subcontractors and material suppliers shall be through the Contractor. Communications by Contractor to separate contractors, architect, or County employees shall be through the Owner's Representative or Project Manager.

4.1.2 Control of Work: The Owner's Representative or the Inspector will not have control over or charge of and will not be responsible for construction means, methods, techniques, sequences or procedures, or for safety precautions and programs in connection with the Work, since these are solely the Contractor's responsibility. The Owner's Representative or the Inspector will not be responsible for the Contractor's failure to carry out the Work in accordance with the Contract Documents. The Owner's Representative or the Inspector will not have control over or charge of and will not be responsible for acts or omissions of the Contractor, subcontractors, or their agents or employees, or of any other persons performing portions of the Work.

4.1.3 Recommendation for Payments: Based on his or her observations and evaluations of the Contractor's Applications for Payment, the Owner's Representative will review amounts due the Contractor and will recommend to Owner, payments to Contractor as set forth in the section entitled CERTIFICATION FOR PAYMENTS.

4.1.4 Inspector's Authority: The Inspector will have the authority to stop work whenever necessary to ensure a proper execution of the Work. The Inspector will also have authority to reject Work which does not conform to the Contract Documents. Whenever the Inspector considers it necessary or advisable for implementation of the intent of the Contract Documents, the Inspector will have authority to require additional inspection or testing of the Work in accordance with the following section whether or not such Work is fabricated, installed, or completed. However, neither this authority of the Inspector nor a decision made in good faith either to exercise or not to exercise such authority shall give rise to a duty or responsibility of the Inspector to the Contractor, subcontractors, material and equipment suppliers, their agents or employees, or other persons performing portions of the Work. In the event an Inspector is not appointed by the Owner, the Owner's Representative shall have the authority set forth herein.

4.2 INSPECTION AND TESTING

4.2.1 Advance Notice: Contractor shall provide Owner's Representative seventy-two (72) hours' notice prior to beginning work at a specific location and for a specific department. Contractor shall notify Owner's Representative and Inspector forty-eight (48) hours prior to any day in which Contractor will 1) require an inspection of any portion of the Work, 2) work in excess of eight (8) hours or any time Contractor intends to work weekends, and 3) require shut down of all or any portion of building systems (electrical, plumbing, fire, mechanical, etc.). Any work not performed subject to inspection will not be accepted and will be rejected and/ or ordered removed by Owner, or Inspector.

4.2.2 Access to Work: The Owner's Representative, the Architect, the Project Manager, and the Inspector will at all times have access to the Work. In addition, authorized representatives and agents of any participating Federal or State Agency shall be permitted to inspect all Work, materials, payrolls, and records on personnel, invoices of materials, and other relevant data and records. The Contractor will provide proper facilities for such access and observation of the Work and also for any inspection or testing thereof.

4.2.3 Costs of Tests: The Owner shall bear all costs related to testing for conformance of the Work to the Contract requirements. However, if the Contractor has called for any testing, and that test fails, subsequent tests, and all related costs, shall be borne by the Contractor.

4.2.4 Preparation of Change Directives/Orders: The Owner's Representative or the Inspector, if one is appointed, will prepare Change Orders and Construction Change Directives, and may authorize minor changes in the Work as provided in the section entitled CHANGES IN WORK.

4.3 CLAIMS

4.3.1 Concealed or Unforeseen Conditions: It is understood by both parties that Contractor has made a pre- contract investigation of the site. All concealed, unforeseen, or materially differing conditions are the responsibility of the Contractor in the absence of an actual material, intentional misrepresentation by the Owner as to the conditions on the site. Contractor shall give written notice of any conditions encountered at the site which are unforeseen, concealed, or materially different from those set forth in the Plans or Contract Documents, or ordinarily encountered and generally recognized as inherent in the Work. Such written notice shall be given within five (5) calendar days of his discovery of any such facts.

4.3.2 Notice of Discovery of Hazardous Waste or Unusual Conditions:

1. The Contractor shall promptly, and before the following conditions are disturbed, notify the Owner in writing, in the event the Contractor encounters any of the following:

    a. Material that the Contractor believes may be hazardous waste, as defined in Health and Safety Code section 25117 that is required to be removed to a Class I, Class II, or Class III disposal site in accordance with provisions of existing law.

    b. Unknown physical conditions at the site of any unusual nature, different materially from those ordinarily encountered and generally recognized as inherent in the work of the character provided for in the contract.

2. The Owner shall promptly investigate the conditions, and if it finds that the conditions do materially so differ, or do involve hazardous waste, or cause a decrease or increase in the Contractor's cost of, or time required for, performance of any part of the work shall issue a change order under the procedures described herein.

3. In the event a dispute arises between the Owner and the Contractor whether the conditions materially differ, or involve hazardous waste, or cause a decrease or increase in the Contractor's cost of, or time required for, performance of any part of the work, the Contractor shall not be excused from any scheduled completion date provided for in the contract, but shall proceed with all work to be performed under the Contract. The Contractor shall retain any and all rights provided either by contract or by law which pertain to the resolution of disputes and protests between the Contractor and the Owner.

4.3.3 Time Limits on Claims: Claims by Contractor must be made within ten (10) calendar-days after occurrence of the event giving rise to such Claim, except that claims made due to delay or hindrances which Contractor claims was caused by Owner shall be made within five (5) calendar-days after occurrence of the event giving rise to such Claim. Claims must be made by written notice. Failure to make such claim in writing in the time set forth herein shall bar Contractor from recourse for such claim. All claims must be filed on or before the payment date of Final Payment.

4.3.4 Claims for Additional Costs:

1. If Contractor wishes to make a Claim for an increase in the Contract Price, he shall give the Owner written notice thereof within the time set forth in Paragraph 4.3.3. This notice shall be given by the Contractor before proceeding to execute the work, except in an emergency endangering life or property in which case the Contractor shall, as soon as possible, advise Owner of his intent to do the Work.

2. Increases in Contract Price due to Claims shall be calculated based on the Cost Reimbursement method detailed in Paragraph 5.4.1.3.

3. Under no circumstances shall Contractor recover any administrative overhead costs or recover on the basis of any "Home Office" damages formula, "Total Cost" recovery formula, or any other such formula.

4.3.5 Claims for Additional Time:

1. If the Contractor wishes to make Claim for an increase in the Contract Time, written notice as provided herein shall be given. The Contractor's Claim shall include an estimate probable effect of delay on progress of the Work.

2. If adverse weather conditions are the basis for a Claim for additional time, such Claim shall be documented by data substantiating that weather conditions were abnormal for the period of time and could not have been reasonably anticipated, and that weather conditions had an adverse effect on the scheduled construction.

3. The Owner shall not be liable for any damages on account of any reasonable delay or hindrance of the Owner. However, Contractor shall be entitled to an extension of time for any delay or hindrance caused by the Owner. Any delay or hindrance by Owner which is unreasonable and not within the contemplation of the parties may subject Owner to a claim for damages. Contractor shall make any claims in writing within the time set forth in Paragraph 4.3.3., for any unreasonable delay or hindrance caused by Owner, and specifying the cause thereof as required in paragraph "Submittal of Claims".

4.3.6 Submittal of Claims: Any disputes relating to this Contract, or its breach, which is not disposed of by agreement shall be promptly submitted as a claim to the Owner's Representative who shall issue a written response on the dispute. Claims shall be submitted by the Contractor to the Owner's Representative with adequate supporting data and include a demand for the Owner's Representative's decision. Adequate supporting data shall include, but is not limited to, a statement of the reasons for the asserted entitlement, the certified payroll, invoice for material and equipment rental, and an itemized breakdown of any adjustment sought.

4.3.7 Submission Under Penalty of Perjury: The Contractor shall certify, at the time of submission of a claim, as follows:

"I certify under penalty of perjury under the laws of the State of California, that the claim is made in good faith, that the supporting data are accurate and complete, and that the amount requested accurately reflects the contract adjustment for which the Owner is liable.

By: _____
"(Contractor's signature)"

4.3.8 Third Party Claims: Owner will notify Contractor of receipt of any third-party claim relating to the contract within five (5) calendar days of receipt of such claim.

4.4 DISPUTE RESOLUTION

4.4.1 Continue Work During Dispute: In the event of any dispute between the Owner and the Contractor, the Contractor will not stop Work but will prosecute the work diligently to completion in the manner directed by the Owner, and the dispute shall be resolved as set forth herein after completion of the Work. However, all disputes must be submitted by Contractor in accordance with the subsequent provisions of this section.

4.4.2 Requirements for Filing a Claim: For any claim subject to this Article, the following requirements apply: the claim shall be in writing and include the documents necessary to substantiate the claim. Claims must be filed on or before the date of final payment. Nothing in this subdivision is intended to extend the time limit or supersede notice requirements otherwise provided by this contract for the filing of claims.

1. For claims of less than fifty thousand dollars ($50,000.00), the Owner shall respond in writing to any written claim within forty five (45) days of receipt of the claim, or may request, in writing, within thirty (30) days of receipt of the claims or relating to defenses or claims the Owner may have against the Contractor, any additional documentation supporting the claim or relating to defenses to the claim the Owner may have against the Contractor.

   If additional information is thereafter required, it shall be requested and provided pursuant to this subdivision, upon mutual agreement of the Owner and the Contractor.

   The Owner's written response to the claim, as further documented, shall be submitted to the Contractor within fifteen (15) days after receipt of the further documentation or within a period of time not greater than that taken by the Contractor in producing the additional information, whichever is greater.

2. For claims of over fifty thousand dollars ($50,000.00) and less than or equal to three hundred seventy-five thousand dollars ($375,000.00), the Owner shall respond in writing to all written claims within sixty (60) days of receipt of the claim, or may request, in writing, within thirty (30) days of receipt of the claim, any additional documentation supporting the claim or relating to the defenses or claims the Owner may have against the Contractor.

   If additional information is thereafter required, it shall be requested and provided pursuant to this subdivision, upon mutual agreement of the Owner and the Contractor.

   The Owner's written response to the claim, as further documented, shall be submitted to the Contractor within thirty (30) days of receipt of the further documentation, or a period of time no greater than that taken by the Contractor in producing the additional information or requested documentation, whichever is greater.

3. If the Contractor disputes the Owner's written response, or the Owner fails to respond within the time prescribed, the Contractor may so notify the Owner, in writing, either within fifteen (15) days of receipt of the Owner's written response or within fifteen (15) days of Owner's failure to respond within the time prescribed, respectively, and demand an informal conference to meet and confer for settlement of the issues in dispute. Upon a demand, the Owner shall schedule a meet and confer conference within thirty (30) days for settlement of the dispute.

4. If following the meet and confer conference the claim or any portion remains in dispute, the Contractor may file a claim pursuant to Government Code section 900, et seq. and in accordance with Public Contract Code section 20104.2.

4.4.3 Owner's Review of Claim: The Owner's Representative shall review the facts pertinent to the claim, secure assistance from legal and other advisors, coordinate with the contract administrators, and promptly provide a written response. The response shall be furnished to the Contractor by certified mail, return receipt requested, or any other method that provides evidence of receipt. The Owner's Representatives' response shall be final and conclusive except as is otherwise provided herein.

4.4.4 Claims Exempt from Review: The procedures and remedies provided in this Section 4.4 do not apply to:

1. Any claims by the Owner.

2. Any claim for or respecting personal injury or death or reimbursement or other compensation arising out of or resulting from liability for personal injury or death.

3. Any claim or dispute relating to stop payment requests or stop notices.

4. Any claim related to the approval, refusal to approve, or substitution of subcontractors, regardless of tier, and suppliers.

4.4.5 Suit in El Dorado County Only: Any litigation arising out of this Contract shall be brought in El Dorado County. The Owner and the Contractor shall follow procedures established for all civil actions filed to resolve claims pursuant to Public Contract Code section 20104 et seq., including but not limited to section 20104.4.

4.4.6 Payment of Undisputed Portion of Claim: Payment by Owner of undisputed portion of claim; interest on arbitration award or judgment.

1. Owner shall pay Contractor such portion of a claim which is undisputed except as otherwise provided in the contract.

2. In any suit filed pursuant to Public Contract Code section 20104.4, the provisions of section 20104.6 shall apply.

3. The rate of interest payable on unpaid and undisputed claims shall be 6 percent per annum. Interest shall begin to accrue sixty-one (61) days after the Contractor submits to the Owner information in sufficient detail to enable the Owner to accept the claim statement.

4. The rate of interest payable on any judgment or award in arbitration shall not exceed 6% per annum in accordance with Civil Code section 3287 et seq.

ARTICLE 5

CHANGES IN WORK

5.1 WAIVER

5.1.1 Waivers of Contract Provisions: It is expressly understood and agreed that no waiver granted by the Inspector or the Owner of any term, provision, or covenant of this Contract shall constitute a precedent for breach of the same or any other terms, provisions, or covenants of this Contract.

5.2 CHANGES

5.2.1 Owner May Order Changes in Work: The Contractor agrees that the Owner, without invalidating the Contract, may order changes in Work by altering, adding to, or deducting from the Work, the Contract Amount and Time being adjusted according to the provisions of Section 5.4 and Section 5.5. Contractor agrees to enter into a modification of his original Contract for such changes.

5.2.2 Cost Proposals: Upon request of the Owner for a quotation on the change to the Work, the Contractor shall promptly submit to Owner's Representative, and the Inspector, if one is appointed, in writing a detailed breakdown of the work and of the amount of deduction or addition claimed. In no case shall Cost Proposals be provided later than ten (10) calendar days from the date requested. The Owner's request for quotations on alterations to the Work shall not be considered authorization to proceed with the work prior to issuance of a Change Order, nor shall such request justify any delay in existing work. If Contractor fails to provide Cost Proposals within ten (10) calendar days, Owner may prepare the Cost Proposal based on estimates of labor, materials, and equipment. This proposal, prepared by Owner, shall be binding on the Contractor, will become the basis for Contract Price adjustment, and shall not be subject to dispute or claim.

5.2.3 Contract Change Instrument: Changes in work involving a change in Contract Price or Contract Time shall be done only pursuant to an Architect's Supplemental Instructions (if applicable), Change Order, or Construction Change Directive as set forth below in this article.

5.2.4 Changes Shall Conform to Contract: Changes in work shall be performed in conformance with applicable provisions of the Contract Documents, and the Contractor shall proceed promptly unless otherwise provided in the Architect's Supplemental Instructions (if applicable), Change Order, or Change Directive.

5.3 CONTRACT CHANGE INSTRUMENTS

5.3.1 Architect's Supplemental Instructions (ASI) (if applicable): The Owner's Representative or the Architect, may order minor changes in work by use of an Architect's Supplemental Instruction. These minor changes will involve neither changes in the Contract Price or Contract Time. If the Contractor disagrees that the change does not involve a change in cost or time, then a Change Order or Change Directive shall be used.

5.3.2 Change Order (CO): The Change Order shall be used in cases where Owner and Contractor agree on the change in work, the amount of or method of computing the Contract Amount, and the amount of adjustment in Contract Time.

5.3.3 Construction Change Directive (CCD): In the event that the Owner and Contractor do not agree on the proposed change in work, and/or the proposed adjustment of Contract Price and Time, or in the event it is essential that the Contractor proceed expeditiously and without delay, then Owner may, by issuance of a Construction Change Directive, order changes in work, and the Contractor shall promptly proceed with the change in work involved.

1. Acceptance of Change Directive: If Contractor agrees with the Change Directive, the Contractor shall by his signature thereon, indicate his acceptance of the terms of the Directive, including adjustments to price and time, and the Change Directive shall then be followed by a Change Order.

2. Non-Acceptance of Change Directive: If the Contractor disagrees with the method of computing an increase in Contract Price, then the amount of adjustment shall be computed by the Cost Reimbursement method detailed in Basis for Adjustment. Disagreements with amounts or credits, under the Cost Reimbursement method, or time, shall be considered a dispute, and processed under the section on Disputes Resolution.

5.4 BASIS OF ADJUSTMENT

5.4.1 Methods of Adjustment: The amount of adjustments to Contract Price, whether a credit or payment, shall be computed by one of the methods detailed below. The method used shall be at the sole determination of the Owner.

1. Unit Prices: Those prices stipulated in the Bid Proposal shall be utilized where they are applicable. In the event the change in original quantity is in excess of twenty-five (25) percent of the original bid quantity, and the total dollar value of that bid is greater than $5,000, the Owner shall review the unit price to determine if a new unit price shall be renegotiated. Unit prices for new items shall be negotiated and mutually agreed upon.

2. Lump Sum: A total lump sum for the Work has been negotiated between Owner and Contractor, as described more fully in Article 3 of the Agreement for Construction Services. Changes to the lump sum contract price sought may be made pursuant to a Change Order, subject to Contractor demonstrating satisfaction of the criteria set forth in Article 3.

3. Cost Reimbursement (Extra Work): In this method, the payment for Extra Work shall be made on a time and expense basis that is on an accounting of the Contractor's forces, materials, equipment, and other items of cost as required and used to do the Work. Payment will be made for the documented actual cost of the following:

    a. Costs of direct labor, excluding supervisory personnel, including social security, old age and unemployment insurance, fringe benefits required by agreement, labor insurance and labor taxes established by law.

    b. Costs of materials, supplies, and equipment, including cost of transportation and sales tax, whether incorporated if paid for by the Contractor or his subcontractor.

    c. Rental costs, prevailing in the area, of machinery and equipment for the actual time used, and including transportation costs for items having value in excess of $100.00.

    d. Costs of premiums for all bonds and insurance, permit fees, and sales, use or similar taxes related to the Work.

    To the above cost the Contractor shall be allowed a markup of fifteen (15) percent on direct labor charges and fifteen (15) percent for all other cost items. When any or all of the Extra Work is done by one of the Contractor's subcontractors, the markups set forth above shall be applied to the subcontractor's actual costs to which a five (5) percent markup shall be allowed the Contractor. These markups shall be considered to be full compensation, covering the cost of general supervision, administration, overhead, profit, and any and all other general expenses, including, but not limited to, uniforms, hand tools, safety equipment, travel and lodging.

5.5 EXTENSION OF TIME FOR COMPLETION

5.5.1 Contractor Delayed or Hindered: Should the Contractor be delayed or hindered in the completion of the Work by the neglect of the Owner, or by fire, by strikes, lockouts, embargoes or earthquakes, and any other causes the County approves as not having been reasonably foreseeable at the time of execution of the Contract Documents, then the time allowance herein fixed for the completion of the Work shall be extended for a period equivalent to the time lost by reason of any or all of the causes aforesaid. Time extensions must be requested in accordance with Section 4.3.

5.5.2 Agreement on Time Extension: In addition, the Contractor and the Owner reserve the right to mutually agree in writing upon an extension of time for completion for causes other than enumerated above.

5.5.3 Time Extension Not Waiver: The granting of an extension of time by the Owner for performance by the Contractor shall not operate as a waiver or stop the Owner from claiming damages due to any other delays, prior or subsequent, which were not approved by the Owner as provided herein.

ARTICLE 6
PAYMENTS AND COMPLETION

6.1 GENERAL

6.1.1 Contract Price: The Contract Price stated in the Contract is the total amount payable by the Owner to the Contractor for performance of the Work under the Contract Documents as defined and subject to the provisions set forth, in Article 3 of the Agreement of Construction Services between Contractor and Owner.

6.1.2 Waiver: Neither the acceptance of the Work by the Owner nor the payment of any part or all of the sum due the Contractor hereunder shall constitute a waiver by the Owner of any claim which the Owner may have against the Contractor or Surety under this Contract or otherwise.

6.1.3 Manner of Paying Warrants: Payment becomes due under the terms of this Contract in the manner prescribed by law. The Auditor shall cause a warrant for the Certified amount to be drawn upon the proper fund of the Treasurer of the Owner, which warrant shall be approved and issued to Contractor within that period of time customarily required to process said warrants in the ordinary course of Owner's business.

6.2 APPLICATIONS FOR PAYMENT

6.2.1 Submittal of Applications: The Contractor shall submit to the Owner or Owner's Representative, an Application for Payment form, which will be provided by the Owner. Such application shall be supported by such data substantiating the Contractor's right to payment as the Owner may require, such as copies of requisitions from subcontractors and material suppliers.

6.2.2 Basis for Payment: The Payment shall be based upon the total Contract price and upon percentage of completion of the Work at the time of the submittal of the application for payment.

6.2.3 Before submitting an Application for Payment (Final or Partial) the Contractor shall reach an agreement with the Project Manager concerning the percentage complete of the Work and the dollar value for which the Application for Payment may be submitted.

6.2.4 Work Free of Liens: The Contractor warrants that upon submittal of an Application for Payment, all work for which Certificates for Payment have been previously issued and payments received from the Owner shall be free and clear of liens, claims, security interests, or encumbrances against Contractor by subcontractors, material suppliers, or other persons or entities making a claim by reason of having provided labor, materials, and equipment in relation to the Work.

6.3 CERTIFICATION FOR PAYMENT

6.3.1 Certification Determination: The Owner's Representative will review as soon as practicable for the purpose of determining whether it is a proper payment request and shall within seven (7) days after receipt of the Contractor's Application for Payment, either issue to the Owner a Certification for Payment, with a copy to the Contractor, for such amount as determined to be properly due, or notify the Contractor of the reasons why the payment request is not proper and for withholding certification of payment in whole or in part as provided in Section 6.4.1.

6.3.2 The Owner shall pay or cause to be paid to Contractor, an amount equal to ninety five percent (95%) as noted in Section 6.4.3 of the amount set forth in the approved Certificate for Payment within thirty (30) days of receipt of an Application for Payment approved by the Owner's representative as provided for in Paragraph 6.3.1 above, and shall retain the remaining five percent (5%) as noted in 6.4.3 until the time provided for in Section 6.6.4. The Owner shall withhold amounts pursuant to stop notices received in addition to the retainage. Failure of Owner to make payments provided herein in a timely manner shall not constitute a default by the Owner of the Contract, but may entitle the Contractor to interest as provided by law.

6.4 WITHHOLDING FROM PAYMENTS

6.4.1 Reasons for Withholding: The Owner may withhold payments, or on account of subsequently discovered evidence nullify the whole or a part of any progress or retention payments to such extent as may be necessary to protect the Owner from loss on account of:

1. Defective work or material not remedied or replaced.
2. The filing of claims or Stop Notices to withhold, or reasonable evidence indicating probable filing of such claims or notices.
3. Failure of the Contractor to make payments properly to subcontractors, or for materials or labor.
4. Failure to make payments to any person or entity for financial obligations of the Contractor under terms of this Contract.
5. A reasonable doubt that the Contract can be completed for the balance then unpaid.
6. Damage to another contractor.
7. Performance of work in violation of the terms of the Contract Documents.
8. Excessive costs to Owner.
9. Failure of Contractor to comply with requirements for timely submittal of specified documentation, including but not limited to construction schedules, cost proposals, and submittals.

6.4.2 Release of Payment: When the above grounds for withholding are removed, payment shall be made for amounts withheld because of them.

6.4.3 Method of Retainage: The Department will retain 5% of the value of each progress payment from each progress payment. The retained funds shall be retained until thirty-five (35) days after recordation of the Notice of Acceptance, as applicable.

6.5 SUBSTITUTE SECURITIES FOR RETENTION

6.5.1 Substitution of Securities: Bidders are hereby put on notice that the successful bidder may substitute securities for any monies withheld by the County of El Dorado to insure performance of the Contract pursuant to Public Contract Code section 22300. This section provides that the Contractor may elect to receive 100 percent of payments due under the Contract Documents from time to time, without retention from any portion of the payment by the County of El Dorado, by depositing eligible securities of equivalent value with the County of El Dorado or qualified escrow agent in accordance with the provisions of Public Contract Code section 22300. Eligible securities shall be limited to those listed in Government Code section 16430, or bank or savings and loan certificates of deposit from a qualified institution. Any such escrow agreement shall follow the form set forth in Public Contract Code section 22300(f) and provided by the Owner.

6.6 FINAL COMPLETION AND PAYMENT OF RETAINAGE

6.6.1 Affidavit of Payment: After the date of Substantial Completion of the Work, and before final acceptance of the Work, the Contractor shall file with the Owner his affidavit, sworn to before a Notary Public, stating that all workmen and persons employed, all firms supplying materials, and all subcontractors upon the project for either labor or material have been paid in full, except certain items, if any, to be set forth in such affidavit covering disputed claims, including claims for acceleration, disruption, delays, inefficiencies, and hindrance, or items in connection with which Stop Notices have been filed under the provisions of the Statutes of the State of California. The filing of such affidavit by the Contractor shall be one of the prerequisites to the making, by the Owner, of the final retainage payment on the Contract.

6.6.2 Final Inspection: Upon receipt of written notice that the Work is ready for final inspection and acceptance and upon receipt of the Application for Payment, the Owner will promptly make such inspection. The Contractor shall complete all punch list items within two (2) weeks of receipt of the written punch list. When the Owner's Representative finds the work acceptable under the Contract Documents and the Contract fully performed, the Owner's Representative will promptly recommend to Owner that Owner may consider the Project complete, accept the project, and that the Notice of Acceptance may be issued.

6.6.3 Final Certification: Before issuance of payment, Contractor shall file, with Owner, a certificate in which he certifies that to the best of the Contractor's knowledge, information, and belief, and on the basis of observations and inspections, the Work has been completed in accordance with terms and conditions of the Contract Documents.

6.6.4 Payment of Retention: Thirty-five (35) days after the Notice of Acceptance has been filed, provided the Work is fully completed and the Contract fully performed, the balance due under the Contract shall be paid, less any monies held for stop notices. Payment shall not be construed as an absolute acceptance of the work done up to the time of such payment. The Contractor, if requested by the Owner, shall furnish receipts or other vouchers showing his payments for materials and labor. Owner may withhold from payment an amount not to exceed 150 percent of any amount in dispute.

6.6.5 Notice of Acceptance: The Work shall be accepted in writing in the form of a Notice of Acceptance when the whole of the work has been completed satisfactorily to the Owner. In judging the Work, no allowance for deviations from the original Contract Documents will be made unless already approved in writing at the proper times and in the manner as called for herein.

ARTICLE 7

PROTECTION OF PERSONS AND PROPERTY

7.1 PROTECTION OF WORK, PROPERTY, AND PERSONS

7.1.1 Responsible for Damage to Owner's Property: The Contractor shall be entirely responsible for any damage to the property of the Owner due to careless handling of tools and/or materials or other causes attributed to the Contractor's Work in performing this Contract.

7.1.2 Responsible for Safety: The Contractor will take all necessary precautions for the safety of, and will provide the necessary protection to prevent damage, injury, or loss to all employees on the Work and other persons who may be affected thereby, all the Work and all materials or equipment to be incorporated therein, whether in storage on or off the site, and other property at the site or adjacent thereto, including trees, shrubs, lawns, walks, pavements, roadways, structures, and utilities not designated for removal, relocation, or replacement in the course of construction.

7.1.3 Safety and Convenience: The Contractor will comply with all applicable laws, ordinances, rules, regulations, and orders of any public body having jurisdiction. The Contractor will erect and maintain, as required by the conditions and progress of the Work, all necessary safeguards for safety and protection. The Contractor will notify owners of adjacent utilities when prosecution of the Work may affect them.

7.1.4 Remedy Damages: The Contractor will remedy all damage, injury, or loss to any property caused, directly or indirectly, in whole or part, by the Contractor, any subcontractor, or anyone directly or indirectly employed by any of them or anyone of whose acts any of them would be liable, except damage or loss attributable to the sole or active negligence of the Owner or the Inspector or anyone employed by them and not attributable, directly or indirectly, in whole or in part, to the fault or negligence of the Contractor.

ARTICLE 8

INSURANCE AND BONDS

8.1 INSURANCE

GENERAL INSURANCE REQUIREMENTS

The Contractor shall provide proof of a policy of insurance satisfactory to the El Dorado County Risk Management Division and documentation evidencing that the Contractor maintains insurance that meets the following requirements:

1. Full Workers' Compensation and Employers' Liability Insurance covering all employees of the Contractor as required by law in the State of California.

2. Commercial General Liability Insurance (providing scope of coverage equivalent to ISO policy form CG 00 01) of not less than Two Million Dollars ($2,000,000) combined single limit per occurrence for bodily injury and property damage, including but not limited to endorsements for the following coverage: Premises, personal injury, operations, products and completed operations, blanket contractual, and independent contractors liability. This insurance can consist of a minimum $1 Million primary layer of CGL and the balance as an excess/umbrella layer, but only if the County is provided with written confirmation that the excess/umbrella layer "follows the form" of the CGL policy. County, including, without limitation, its officers, officials, employees, and volunteers shall be named as an additional insured on ISO form CG 2010 1185, or its equivalent.

3. Automobile Liability Insurance of not less than One Million Dollars ($1,000,000) is required in the event motor vehicles are used by the Contractor in performance of the contract.

4. In the event Contractor is a licensed professional and is performing professional services under this contract, Professional Liability Insurance is required with a limit of liability of not less than One Million Dollars ($1,000,000).

5. Explosion, Collapse and Underground coverage is required when the scope of work includes XCU exposures. For the purpose of this contract, XCU coverage is not required.

PROOF OF INSURANCE REQUIREMENTS

1. Contractor shall furnish proof of coverage satisfactory to the El Dorado County Risk Management Division as evidence that the insurance required herein is being maintained. The insurance will be issued by an insurance company acceptable to the Risk Management Division or be provided through partial or total self-insurance likewise acceptable to the Risk Management Division.

2. The County of El Dorado, its officers, officials, employees, and volunteers shall be included as additional insureds, but only insofar as the operations under this Contract are concerned. This provision shall apply to all general liability and excess liability policies. Proof that the County is named additional insured shall be made by providing the Risk Management Division with a certified copy, or other acceptable evidence, of an endorsement to Contractor's insurance policy naming the County additional insured.

3. In the event Contractor cannot provide an occurrence policy, Contractor shall provide insurance covering claims made as a result of performance of this contract for not less than three (3) years following completion of performance of this Contract.

4. Any deductibles or self-insured retentions must be declared to and approved by the County. At the option of the County, either: the insurer shall reduce or eliminate such deductibles or self-insured retentions as respects the County, its officers, officials, employees and volunteers; or the Contractor shall procure a bond guaranteeing payment of losses and related investigations, claim administration and defense expenses.

5. Contractor shall also require each of its subcontractors to names Contractor and County, including, without limitation, its officers, officials, employees, and volunteers, as an additional insured on Subcontractor's insurance policies using ISO form CG 2010 1185, or its equivalent. Copies of endorsements from each Subcontractor will be obtained and maintained by Contractor for the duration of the Work, and for ten years following completion of the Work.

INSURANCE NOTIFICATION REQUIREMENTS

1. Contractor agrees no cancellation or material change in any policy shall become effective except upon thirty (30) days prior written notice to the County of El Dorado, Environmental Management Department, Department Head, at 2850 Fairlane Court, Placerville, California 95667.

2. Contractor agrees that the insurance required herein shall be in effect at all times during the term of this agreement. In the event said insurance coverage expires at any time or times during the term of this Contract, Contractor shall immediately provide a new certificate of insurance as evidence of the required insurance coverage. In the event Contractor fails to keep in effect at all times insurance coverage as herein provided, County may, in addition to any other remedies it may have, terminate this Contract upon the occurrence of such event. New certificates of insurance are subject to the approval of the Risk Management Division.

   ADDITIONAL STANDARDS
   Certificates shall meet such additional standards as may be determined by the Department either independently or in consultation with the Risk Management Division, as essential for protection of the County.

   COMMENCEMENT OF PERFORMANCE
   Contractor shall not commence performance of this Contract unless and until compliance with each and every requirement of the insurance provisions is achieved.

   MATERIAL BREACH
   Failure of Contractor to maintain the insurance required herein, or to comply with any of the requirements of the insurance provisions, shall constitute a material breach of the entire Contract.

   REPORTING PROVISIONS
   Any failure to comply with the reporting provisions of the policies shall not affect coverage provided to the County, its officers, officials, employees or volunteers.

   PRIMARY COVERAGE
   The Contractor's insurance coverage shall be primary insurance as respects the County, its officers, officials, employees and volunteers. Any insurance or self-insurance maintained by the County, its officers, officials, employees or volunteers shall be in excess of the Contractor's insurance and shall not contribute with it.

   PREMIUM PAYMENTS
   The insurance companies shall have no recourse against the County of El Dorado its officers, agents, employees, or any of them for payment of any premiums or assessments under any policy issued by any insurance company.

   CONTRACTOR'S OBLIGATIONS
   Contractor's indemnity and other obligations shall not be limited by the insurance required herein and shall survive the expiration of this Contract.

8.2 BONDS

8.2.1 General Requirements for Bonds: Before commencing any Work under the Contract, the Contractor shall provide all bonds to the Owner. These bonds shall be in the amounts and for the purposes specified below. They shall be Surety bonds and shall be issued by corporations duly and legally licensed and qualified to transact business in the State of California. They shall be maintained by him and at his expense during the entire life of the Contract or later as provided.

8.2.2 Performance Bond: One bond shall be in the amount of 100 percent of the Awarded Contract and shall guarantee the faithful performance of the Contract and shall insure the Owner during the life of the Contract and the Guarantee period. The Contractor may provide, subject to approval by the Owner, a separate guarantee bond upon completion of and acceptance of the work.

8.2.3 Payment Bond: One bond shall be in the amount of 100 percent of the Awarded Contract and shall guarantee the payment in full of all claims for labor and materials in accordance with the provisions of the laws of the State of California.

8.2.4 Change of Surety: If, at any time a Surety on such bonds becomes irresponsible or loses its right to do business in the State of California, the Owner may require another Surety which the Contractor shall furnish within ten (10) calendar days after receipt of written notice to do so.

8.2.5 Authentication of Bonds: Evidence of authority of an attorney-in-fact acting for the corporate Surety must be provided in the form of a certificate as to his power of attorney and to the effect that it is not terminated and remains in full force and effect on the date of the bonds. The form of the bonds shall be in accordance with those provided in the Draft Agreement.

ARTICLE 9

UNCOVERING AND CORRECTION OF WORK

9.1 DEVIATION FROM CONTRACT DOCUMENTS

9.1.1 Improper Work: If the Contractor shall vary from the Contract Documents in the form or quality of the Work, or the amount or value of the materials herein provided for, the Owner shall have the right to order such improper work or materials removed, remade, or replaced. In the event that the Work is ordered changed, any other work disturbed or damaged by such alteration shall be made good at the Contractor's expense.

9.2 CORRECTION OF WORK

9.2.1 Covered or Completed Work: If any work is covered contrary to the written instructions of the Owner's Representative, or the Inspector, if one is appointed, it must, if requested, be uncovered for observation and replaced at the Contractor's expense.

9.2.2 Inspection of Covered Work: If the Owner's Representative or the Inspector, if one is appointed, considers it necessary or advisable that covered Work be inspected or tested by others, the Contractor, upon request, will uncover, expose, or otherwise make available for observation, inspection, or testing as the Inspector may require, that portion of the Work in question, furnishing all necessary labor, materials, tools, and equipment. If it is found that such Work is defective, the Contractor will bear all the expenses of such uncovering, exposure, observation, inspection, and testing and of satisfactory reconstruction; if, however, such Work is not found to be defective, the Contractor will be allowed an increase in the Contract price or an extension of the Contract time, or both, directly attributable to such uncovering, exposure, observation, inspection, testing, and construction, and an appropriate Change Order shall be issued.

9.2.3 Rejected Work: The Contractor shall promptly remove from the premises all Work rejected by Owner for failure to comply with the Contract Documents, whether incorporated in the construction or not, and the Contractor shall promptly replace and re-execute the work either during the term of the Contract or during the warranty period, in accordance with the Contract Documents and without expense to the Owner and shall bear the expense of making good all Work of other contractors destroyed or damaged by such removal or replacement.

9.2.4 Cost of Correction: All removal and replacement Work shall be done at the Contractor's expense. If the Contractor does not take action to remove such rejected Work within ten (10) days after receipt of written notice, the Owner may remove such Work and store the materials at the expense of the Contractor. Owner also may perform such Work or repairs itself and charge the expense to the Contractor.

ARTICLE 10

SUSPENSION OF CONTRACT

10.1 SUSPENSION OF WORK

10.1.1 Owner May Suspend: The Owner may suspend the Work or any portion thereof for a period of not more than ninety (90) days or such further time as agreed upon by the Contractor, by written notice to the Contractor which shall fix the date on which work shall be resumed.

10.1.2 Resumption of Work: The Contractor shall resume that Work on the dates so fixed. The Contractor shall be allowed an increase in the Contract price or an extension of the Contract time, or both, directly attributed to any suspension.

* END OF CONDITIONS OF THE CONTRACT*

Attachment A - Project Specifications

COUNTY OF EL DORADO
ENVIRONMENTAL MANAGEMENT DEPARTMENT
UNION MINE WASTEWATER TREATMENT FACILITY
HEADWORKS CONSTRUCTION PROJECT

ISSUED FOR BID #24-0056

Stantec

COUNTY OF EL DORADO – UNION MINE WASTEWATER TREATMENT FACILITY HEADWORKS CONSTRUCTION PROJECT

LICENSEE RESPONSIBLE FOR TECHNICAL SPECIFICATIONS

Technical Specifications prepared by or under the direction of the following registered persons:

Beth Cohen (Civil/Mechanical)
Stantec Consulting Services Inc.
2250 Douglas Blvd.
Roseville, CA 95661
(916) 773-8100



03/14/2023

Steven Stoll (Structural)
Capstone Structural Engineering
7353 West Riverview Dr
Coeur d'Alene, ID 83814
(559) 681-3681



03/13/2024

Long Hoang (Electrical)
Stantec Consulting Services Inc. 2250 Douglas Blvd.
Roseville, CA 95661
(916) 773-8100



03/13/2024

COUNTY OF EL DORADO
ENVIRONMENTAL MANAGEMENT DEPARTMENT
UNION MINE WASTEWATER TREATMENT FACILITY
HEADWORKS CONSTRUCTION PROJECT TECHNICAL SPECIFICATIONS
TABLE OF CONTENTS

Division 1:	***General Requirements***
01010	General Construction Information and Requirements
01020	Modification of Existing Facilities and Order Of Work
01050	Survey Control
01200	Payment Procedures
01300	Submittals
01305	Project Meetings
01310	Construction Schedule
01330	Safety Plan
01610	Seismic Design Criteria
01615	Wind Design Criteria
01620	Quality Control and Inspection
01640	Product Handling
01656	Disinfection of Water Lines
01666	Testing of Pipelines, Gravity Sewer Lines, and Manholes
01670	Equipment and System Testing and Startup
01675	Training
01680	Operation and Maintenance Manuals

Division 1:	***General Requirements (Continued)***
01700	Contract Closeout
Division 2:	***Sitework***
02010	Subsurface Conditions
02100	Demolition, Clearing, Grubbing, and Stripping
02140	Dewatering
02200	Earthwork
02223	Trenching, Backfilling, and Compacting
02225	Structure Excavation and Backfill
02229	Utility Line Marking
02233	Watering
02270	Stormwater Runoff Control Program
02272	Vegetative Erosion Control
02513	Asphalt Concrete Paving
02601	Manholes and Cleanouts
Division 3:	***Concrete***
03071	Epoxies
03072	Epoxy Resin/Portland Cement Bonding Agent
03100	Concrete
03110	Controlled Low Strength Material
03480	Precast Utility Vaults and Catch Basins
03700	Concrete Saw-Cutting and Core-Drilling
03926	Concrete Repair

Division 4: Masonry

Not used

Division 5: Metals

05120	Structural Steel
05140	Structural Aluminum
05500	Metal Fabrications
05521	Pipe Railing
05530	Gratings, Stair Treads, and Floor Plates
05570	Metal Support Framing

Division 6: Wood and Plastics

Not Used

Division 7: Thermal and Moisture Protection

Not Used

Division 8: Doors and Windows

Not Used

Division 9: Finishes

09900	Painting and Finish Schedule

Division 10: Specialties

10400	Identifying Devices

Division 11: Equipment

11010	General Mechanical Equipment Provisions
11330	Septage Receiving Station

Division 12: Furnishings

Not Used

Division 13: Special Construction

Not Used

Division 14: Conveying System

Not Used

Division 15: Mechanical

15010	General Process and Onsite Utility Piping Provisions
15052	Stainless Steel Piping
15062	Ductile Iron Pipe
15071	Plastic Pipe
15080	Piping Accessories and Appurtenances
15082	Piping Insulation and Freeze Protection
15094	Hangers and Supports
15100	Valves

Division 16: Electrical

16010	Electrical
16110	Conduits
16115	Duct Banks, Vaults and Pull Boxes
16120	Wires, Fuses, and Terminal Boxes
16140	Wiring Devices
16441	Panelboards
16450	Grounding

Division 17: Instrumentation

Not Used

Appendices

Appendix A Geotechnical Report

SECTION 01010

GENERAL CONSTRUCTION INFORMATION AND REQUIREMENTS

PART 1 GENERAL

1.1 DESCRIPTION

This section covers the general requirements for the Contractor's temporary facilities at the job site and for the prosecution of the work.

1.2 RELATED WORK SPECIFIED ELSEWHERE

A. Section 01020 - Modification of Existing Facilities and Order of Work

B. Section 01700 - Contract Closeout

C. Section 01300 - Submittals

D. Section 01330 - Safety Plan

E. Section 02270 - Stormwater Runoff Control Program

F. Section 02513 - Asphalt Concrete Paving

G. Section 11010 - General Mechanical Equipment Provisions

H. Section 16010 - Electrical

1.3 GENERAL NATURE OF THE WORK

The work generally involves furnishing of labor, equipment, and materials necessary to construct the Union Mine WWTP Headworks Improvements Project complete and ready for operation. The Project includes: Construction of new headworks septage receiving station (including screening, aerated grit chamber, grit classification, drain pumping), grading and paving, yard piping, electrical and instrumentation; and all appurtenances and incidental work necessary for complete and operable facilities.

1.4 LOCATION OF THE PROJECT SITE

The project site is located at 5700 Union Mine Road, El Dorado, California 95623.

1.5 ACCESS TO THE SITE

Access to the project site is through the Union Mine Landfill and as shown on the Drawings or as directed by the Engineer.

PART 2 MATERIALS

2.1 MATERIALS

See Divisions 2 through 16 for materials and methods of installation.

PART 3 EXECUTION

3.1 CONTRACTOR'S OFFICE TOOLS AND EQUIPMENT

A. Security: The Contractor shall at all times be responsible for the security of his plant and equipment. The Owner will not take any responsibility for missing or damaged equipment, tools or personal belongings.

B. Contractor’s Field Office: During the performance of the contract, the Contractor shall maintain a suitable office at the work site which shall be the headquarters of the Contractor's representative. The Contractor shall provide furnishings for the Contractor’s field office, including desks, chairs, conference table for 6 persons, and whatever electrical and computing devices needed by the Contractor to complete the project and as described in subsequent sections. The Contractor shall maintain a cleaning service, garbage service, and arrange for utility repairs should repairs be necessary for the operation and maintenance of the services.

C. Workshop and Storage Facilities: Contractor shall provide storage buildings for the protection of equipment, materials, supplies and tools. The building used for the storage of materials which deteriorate when exposed to moisture shall be moisture-proof. Workshops and storage buildings shall be located as designated by the Engineer, and shall be clean and in proper order at all times.

D. Parking Facilities: Contractor shall provide temporary parking areas, at locations on the project site approved by the Engineer, for visitor parking, employee vehicles, and the vehicles used by the Contractor's construction employees.

3.2 CONTRACTOR'S UTILITIES

A. Power: The Contractor shall provide and maintain power to the field offices. The Contractor shall be responsible for obtaining and maintaining power for the purposes of construction, and for any field offices or ancillary structures installed by the Contractor for his use during construction.

B. Water: Potable water used for the purposes of construction or for the Contractor's use shall be furnished by the Contractor at no charge to the Owner. See specification Section 02233 for information on availability of water. Arrangements for the purchase of this water from the County of El Dorado shall be the responsibility of the Contractor. All equipment and labor for water storage, pumping, and conveyance shall be furnished and paid for by the Contractor.

C. Telephone: The Contractor shall be responsible for connecting and maintaining telephone/DSL service to the field offices.

D. Sanitary Facilities: The Contractor shall provide sanitary facilities for the field offices. The Contractor shall be responsible for obtaining and maintaining sanitary facilities for the purposes of construction, and for any additional field offices or ancillary structures installed by the Contractor for his use during construction. Currently, there are no available sanitary facilities available for the Contractor's use on the site.

E. Temporary Heating: The Contractor shall be responsible for providing temporary heating, covering and enclosures as necessary to protect all work and material against damage by dampness and cold and to facilitate completion of the work. The Contractor shall supply all the fuel, equipment and materials required for temporary heating, in accordance with manufacturer's recommendations.

F. The Contractor's use of the project site and facilities for personnel housing shall not be allowed.

G. Use of the Owner's equipment is prohibited without written approval from the Owner. The Contractor shall obtain written permission from the Owner before using owner's equipment. The Contractor shall take care to protect Owner's equipment from misuse.

Any damage of Owner's equipment or failure of the equipment as a result of abuse or overloading shall be Contractor's responsibility.

3.3 LANDS PROVIDED BY OWNER

The Owner will provide all lands required for the Work under the contract, together with the right of access to such lands, as indicated. The Contractor shall not unreasonably encumber the premises with his equipment or materials. Periodic clean-up and debris removal may be requested by the Engineer as site maintenance at no extra cost to the Owner. Unless otherwise indicated, Owner's facilities on the site must remain in operation throughout the duration of project construction.

3.4 LANDS PROVIDED BY CONTRACTOR

A. The Contractor shall provide, with no liability or additional cost to the Owner, any additional land and access thereto not shown or described that may be required for temporary construction facilities or storage of materials. He shall construct all access roads, detour roads or other temporary works as required by his operations.

B. The Contractor shall confine his equipment, storage of materials and operation of his workmen to those areas shown and described and such additional areas as he may provide.

3.5 PRECONSTRUCTION PRINTS

The Contractor shall, before mobilization begins, submit two binders of hard copy printouts, and electronic files of digital preconstruction photos of the work area. Each photo shall include a date stamp as part of the image. The electronic photo files shall be provided in JPEG format at the highest quality compression setting with a camera resolution of 3.3 megapixels minimum on a USB flash drive shall be provided with each binder. The hard copy image printouts shall be full color, a maximum of two prints to a page, each print a minimum size of 5 inches by 7 inches, with a printed image quality of at least 300dpi and shall be printed on photo glossy white photo paper. Each printed image shall be labeled with the electronic image file name, the location and direction it was taken, and a short description of the subject. The Engineer may designate the locations and subject of up to 50 photos, but the Contractor may wish to take more images to fully document the existing conditions of the site or facilities before work begins. All such photos shall be included in the aforementioned submittal.

3.6 PRECONSTRUCTION VIDEO

The Contractor shall provide a video, on USB flash drives, to the Owner. The video shall clearly show the pre-construction condition of the project site and roadways to be utilized for access to the project site during construction, a minimum distance of one mile from the project site. The video shall clearly display the date and time it was taken. Two copies of the video shall be transmitted to the Owner prior to mobilization.

3.7 CONSTRUCTION PRINTS

The Contractor shall submit, each month during the construction, two binders of hard copy printouts, and two copies of electronic files of digital construction photos documenting the progress of the Work. Each photo shall include a date stamp as part of the image. The electronic photo files shall be provided in JPEG format at the highest quality compression setting with a camera resolution of 3.3 megapixels minimum on a USB flash drive shall be provided with each binder. The hard copy image printouts shall be full color, a maximum of two prints to a page, each print a minimum size of 5 inches by 7 inches, with a printed image quality of at least 300dpi, and shall be printed on photo glossy white photo paper. Each printed image shall be labeled with the electronic image file name, the location and direction it was taken, and a short description of the subject. The Engineer may designate the locations and subject of up to 50 photos each monthly submittal. Upon completion of the Work, additional photos shall be taken of the subjects and locations depicted in the preconstruction photographs and submitted as described above.

3.8 SHIPPING AND PROTECTION OF EQUIPMENT

A. Provide product handling and protection of the equipment and materials in accordance with Section 01640 – Product Handling

3.9 TESTS AND INSPECTION

A. General Requirements: All materials, equipment, installation and workmanship included in this contract, if so required by the Engineer, shall be tested and inspected to prove compliance with the contract requirements. No tests specified herein shall be applied until the item to be tested has been inspected and approval given for the application of such test.

B. Tests and inspections shall include:

1. The delivery acceptance test and inspections.

2. The installed tests and inspections of items as installed.

C. Tests and inspections, unless otherwise specified or accepted, shall be in accordance with the recognized standards of the industry.

D. The form of evidence of satisfactory fulfillment of delivery acceptance test and of installed test and inspection requirements shall be, at the discretion of the Engineer, either by tests and inspections carried out in his presence or by certificates or reports of tests and inspections carried out by approved persons or organizations.

E. Delivery Acceptance Tests and Inspections: The delivery acceptance tests and inspections shall be at the Contractor's expense for any materials or equipment specified and shall include the following:

1. Test of items during the process of manufacture and/or on completion of manufacture, comprising material tests, hydraulic pressure tests, electric tests, performance and operating tests and inspections in accordance with the relevant standards of the industry and more particularly as detailed in individual sections of these specifications, or as may be required by the Engineer to satisfy himself that the items tested and inspected comply with the requirements of this contract.

2. Inspection of all items delivered at the site in order to satisfy the Engineer that such items are of the specified quality and workmanship and are in good order and condition at the time of delivery.

F. Installed Tests and Inspection:

1. All mechanical and electrical equipment shall be tested by the Contractor to the satisfaction of the Engineer before any facility is put into operation. Tests shall be specified herein and shall be made to determine whether the equipment has been properly assembled, aligned, adjusted and connected. Any changes, adjustments or replacements required to make the equipment operate as specified shall be carried out by the Contractor as part of the work and be pre-approved by the manufacturer.

2. At least 30 days before the time allowed in his construction schedule for commencing testing and start-up procedures, the Contractor shall submit to the Engineer, in duplicate, details of the procedures he proposes to adopt for testing and start-up of all mechanical and electrical equipment to be operated singly and together.

3. During the testing of equipment, the Contractor shall make available experienced factory trained representatives of the manufacturers of all the various pieces of equipment, or other qualified persons who shall instruct the Owner's personnel in the operation and care thereof. Instruction shall include step-by-step troubleshooting procedures with all necessary test equipment. All manufacturer's instructions shall be provided in writing.

4. During the performance tests, data shall be taken and recorded to demonstrate that all equipment and systems comply with manufacturer's submitted data and other requirements of the contract.

5. If under test, any portion of the work should fail to fulfill the contract requirements and is altered, renewed or replaced, tests on that portion when so altered, removed or replaced, together with all other portions of the work as are affected thereby, shall, if so required by the Engineer, be repeated within reasonable time and in accordance with the specified conditions, and the Contractor shall pay to the Owner all reasonable expenses incurred by the Owner as a result of the carrying out of such tests.

6. If any doubt, dispute or difference should arise between the Engineer and the Contractor regarding the test results or the methods or equipment used in the carrying out of a test, the Engineer may order the test to be repeated using modified methods or equipment. If the repeat test substantially confirms the Engineer’s position on the previous test, all costs in connection with the repeat test will be paid by the Contractor, otherwise the costs shall be borne by the Owner. Where the results of

any installed test fail to meet the contract requirements, repeat tests to achieve the contract requirements shall be made at the Contractor's expense.

G. Plant Operational and Performance Tests

1. After all individual equipment is tested and certified by the factory-trained representatives, the Contractor shall perform a 5-day plant operational test of the entire treatment process train. Contractor shall be responsible for any recirculation pumping required during this test as specified in Section 01020. The 5-day operational test shall be conducted using clean water and shall include all operational facilities. The testing shall be completed under the supervision of plant operations staff. Operational testing shall include automatic control and instrumentation systems. Any equipment or control systems that fail to perform properly shall be corrected and retested by the Contractor. Successful completion of the 5-day plant operational test is required prior to substantial completion.

2. In addition to the 5-day plant operational test, certain mechanical equipment and pumps, when required in the specifications, shall be given a field performance test in accordance with Section 11010.

3.10 DOCUMENT CONTROL SYSTEM

A. The Contractor shall purchase and use document control system software to organize, transmit, track, and file all submittals, Requests for Information (RFIs), change orders, etc.

B. System shall be Procore, EaDoc, or equal. This software shall be made available to the Owner and Owner’s Agents, at no additional cost.

3.11 OPERATION AND MAINTENANCE MANUALS

A. Before receiving payment for more than 85 percent of the work or prior to the start-up of individual equipment, the Contractor shall deliver to the Engineer five sets of acceptable manufacturer's operating and maintenance instructions, as detailed below.

B. Operating and maintenance information shall be provided for each maintainable piece of equipment, equipment assembly or subassembly, and material provided or modified under this Contract in accordance with Section 01680 – Operation and Maintenance Manuals.

3.12 TRAINING

The Contractor shall provide training of the Owner’s personnel in the proper operation and maintenance of the equipment and systems installed under this Contract in accordance with Section 01675 – Training.

3.13 RESTORATION OF STRUCTURES AND SURFACES

A. Structures, Equipment and Pipework: The Contractor shall remove such existing structures, equipment, and pipework as may be necessary for the performance of the work and shall rebuild or replace the items thus removed to original or better condition. He shall repair any existing structures which may be damaged as a result of his work.

B. Roads and Streets: All roads and streets in which the surface is removed, broken or damaged, or in which the ground has caved or settled due to work under this contract, shall be completely restored and brought to the original grade and crown section unless otherwise indicated. Before resurfacing material is placed, edges of pavements shall be trimmed back far enough to provide clean, solid, vertical faces, and shall be free of any loose material. Roadways used by the Contractor for hauling materials, equipment, supplies, etc., shall be cleaned and repaired if the condition of the roadway is damaged or otherwise affected due to the Contractor's operations. Repaving and repairs shall be done in accordance with Section 02513 – Asphalt Concrete Paving.

C. Cultivated Areas and Other Surface Improvements: All cultivated and natural areas, either agricultural or lawns, and other surface improvements which are damaged by actions of the Contractor shall be restored, including roadside drainage ditches, as nearly as possible to their original condition or better.

3.14 SAFETY

A. The Contractor shall execute and maintain his work so as to avoid injury or damage to any person or property. All work shall be done in conformance with the State of California Division of Industrial Relations and OSHA Standards.

B. Safety precautions as applicable shall include, but not be limited to, adequate life protection, and life saving equipment; adequate illumination for underground and night operations; instructions in accident prevention for all employees; such machinery guards, walkways, scaffolds, ladders, bridges, and other safety devices, equipment and wearing apparel as are necessary or lawfully required to prevent accidents or injuries, and the proper inspection and maintenance of all safety measures.

C. The names and telephone numbers of at least two medical doctors practicing in the vicinity and the telephone number of the local ambulance shall be prominently displayed adjacent to all telephones.

D. The Contractor shall develop and maintain a Construction Safety Plan as stipulated in Section 01330.

E. Nothing in this Section shall dilute the Contractor’s complete and continuous responsibility for Site health, safety, and security as set forth on Section 00700 – General Conditions.

3.15 CONTRACTOR'S PERSONNEL PROTECTION

A. The Contractor is warned that sewage may contain infectious bacteria, viruses and other disease-bearing organisms. It is the Contractor's responsibility to urge his personnel to observe a strict regimen of proper hygienic precautions, including any inoculations recommended by the public health officer.

B. Because of the danger of solvents, gasoline and other hazardous materials being carried in raw sewage, sewer lines and manholes, certain areas around the treatment plant are considered hazardous to open flame, sparks or unventilated occupancy. The Contractor shall be aware of these dangers and shall take the necessary measures to assure his personnel observe proper safety precautions when working in these areas.

3.16 TRENCH SAFETY

A. Attention is directed to the provisions of Section 6705 of the Labor Code of the State of California.

B. Excavation for any trench 5 feet or more in depth shall not begin until the Contractor has submitted to the Engineer, with the resolution of "No exceptions taken" of the Contractor's detailed plan for worker protection from the hazards of caving ground during the excavation of such trench. Such plan shall be submitted in accordance with Section 01300 and shall show the details of the design of shoring, bracing, sloping, or other provisions to be made for worker protection during such excavation. No such plans shall allow the use of shoring, sloping or a protective system less effective than that required by the Construction Safety Orders of the Division of Industrial Safety and if such plan varies from the shoring system standards established by the Construction Safety Orders, the plan shall be prepared and signed by an Engineer who is registered as a Civil or Structural Engineer in the State of California.

C. In addition, the Contractor shall obtain, pay for, and comply with all provisions of the permit required by Section 6500 of the California Occupational Safety and Health Act of 1973. A copy of permit must be submitted per Section 01300.

D. In accordance with the provisions of Section 6707 of the State Labor Code, each bidder shall list, in the Bid Items indicated, the amount contained in his proposal for adequate trench and excavation, sheeting, shoring, and bracing or equivalent method for the protection of life and limb which shall conform to applicable Safety Orders. By listing this sum in his proposal, the bidder warrants that his action does not convey tort liability to the Owner, the Owner's employees, or the Engineer.

END OF SECTION

(THIS PAGE LEFT BLANK INTENTIONALLY)

SECTION 01020

MODIFICATION OF EXISTING FACILITIES AND ORDER OF WORK

PART 1 GENERAL

1.1 SCOPE

A. This section covers the care of and work to be done on existing facilities at the site of the work, the requirements for providing continuous wastewater treatment and disposal operations during construction activities, and other requirements affecting the sequence of construction.

B. Existing facilities at the site consist of headworks and aerobic digestion, dewatering, and effluent storage processes, and interconnecting transfer piping and structures. Treated effluent is disposed of with land application on the treatment plant site (at the LAA). Facility operations are governed by a waste discharge permit issued to the County of El Dorado by the Regional Water Quality Control Board (RWQCB), upon which requirements of this Section are based. The Order of Work contained herein specifies required sequencing and/or timing of construction activities.

PART 2 MATERIALS

2.1 MATERIALS

See Divisions 2 through 16 for materials required.

PART 3 EXECUTION

3.1 GENERAL

A. The existing treatment facilities will be maintained in continuous operation during construction of the project, except for limited shut-downs as described herein. To this end, the Contractor shall establish a schedule of activities in cooperation with the Engineer and County operating staff, which shall be updated from time to time, shall meet the requirements of this section, and shall be approved by the Engineer.

B. Plans and specifications from which most of the existing facilities were constructed are available from the Engineer.

C. Existing treatment processes include a headworks, aerobic digesters, sludge dewatering centrifuge, disinfection, effluent storage, and land disposal.

D. Work Sequence and Constraints described hereinafter are critical events in work sequence which are presented to underscore the importance of proper sequencing, scheduling and coordination so that it is integrated with the required wastewater treatment. The work sequence and constraints presented do not describe all items affecting the completion of the Work, but are intended to describe important events necessary to minimize disruption of the existing facilities and to ensure compliance with wastewater discharge permit requirements.

E. The existing facility where Contractor's work is to be done will be occupied by the Owner throughout the construction period. The Contractor shall provide all necessary access to the Owner's personnel as required to safely and efficiently operate/maintain the facilities. At all times during the Contract duration, the Contractor is to provide the Owner's personnel and representatives safe and immediate access to all process control equipment. Additionally, the Contractor is to provide for unimpeded access for all delivery vehicles transporting materials, chemicals and equipment to the facility for the Owner's operations.

F. Existing systems or individual equipment items shall be isolated, decommissioned, de-energized, or depressurized only as allowed by the Engineer and the County's plant personnel. This work will be done in accordance with the detailed outage plan and schedule to be submitted by the Contractor and the conditions specified in this section.

G. The Contractor shall design and provide all necessary bulkheads, cofferdams, and support structures to allow isolation of work areas from tanks, pipes, and/or channels which are in service. Bulkheads, cofferdams, and support structures shall conform to applicable CAL/OSHA requirements.

H. The Contractor shall provide all necessary temporary pumps, piping, power, electrical wiring, controls, and labor during and subsequent to all shutdown activities as required. The Contractor shall maintain adequate access to the plant facilities, utilities, and equipment during construction to allow continued operation and maintenance by plant personnel to take place.

I. If valves need to be opened or closed, or pumps turned off or on, or similar operations performed, this is to be performed by the Owner's treatment plant operations staff working in coordination with Contractor personnel.

J. The Contractor shall minimize shutdown times thorough advanced planning. Work shall not proceed prior to the approval of associated submittals, for example excavation plans shall be approved prior to the initiation of excavation, piping installation drawings shall be

approved prior to the initiation of piping installation, etc. Contractor shall have all equipment, materials, and labor on hand at time of shutdown.

K. By following the suggested sequence for any procedure described in this section, the Contractor assumes full responsibility for its use.

L. Protect all existing utilities, including but not limited to, electrical, water, sanitary, gas, data and telephone. Existing utilities are to remain in service during construction. Provide temporary utilities as necessary and as approved by the Engineer.

3.2 BYPASSING DURING CONSTRUCTION

A. Bypassing of untreated or partially treated wastewaters to surface waters or drainage courses will not be permitted.

B. In the event accidental bypassing is caused by the Contractor's operations, the Owner shall immediately be entitled to employ others to stop the bypassing without giving written notice to the Contractor. All costs incurred by the Owner to stop or prevent the bypass shall be paid by the Contractor.

C. Penalties imposed on the Owner as a result of any bypass caused entirely or in part by the actions of the Contractor, his/her employees, or subcontractors, shall be borne in full by the Contractor, including legal fees and other expenses to the Owner resulting directly or indirectly from the bypass. Under the terms of discharge permits issued to the Owner, in the event accidental bypassing occurs, the Owner is liable for penalties. Liquidated damages are defined in Specification Section 00520.

3.3 REMOVAL OF EXISTING STRUCTURES AND EQUIPMENT

A. The Contractor shall remove all existing equipment, structures, piping, valves, and other items as indicated on the Drawings. Where the plans indicate "Remove and Save", the Contractor shall carefully remove the item and protect it so as to avoid damage, shall thoroughly clean it, and stockpile it at a location on the site designated by the Engineer. Where the plans indicate "Remove and Reinstall", or "Relocate", the items shall be carefully removed and re-erected or reinstalled at another location as shown, after cleaning and such repairs and adjustments made as are necessary. Where indicated to be "Remove and Waste", the Contractor shall remove the item and dispose of it off the site at his expense or may salvage it for his own gain.

B. The Owner reserves the first right of refusal if a need is identified for removed items. If a request is made by the Owner, the Contractor shall provide a schedule of values to identifying their associated value. After all parties agree to terms of change order, Contractor shall deliver the items to the Owner at an area identified by the Engineer on the plant site or storage area.

3.4 COORDINATION WITH PLANT OPERATIONS

A. The Contractor shall coordinate his operations with the operations of the plant. The Contractor shall notify the Engineer in writing of the Contractor's planned procedure for each specific alteration of existing facilities at least two weeks before the alteration begins. The Contractor shall not begin an alteration until specific permission has been granted by the Engineer in each case. The Engineer will coordinate the Contractor's planned procedure with the plant operating personnel. The making of connections to existing facilities or other operations that interfere with the operation of existing equipment shall be completed only after written approval has been granted by the Engineer and shall be completed as quickly as possible and with as little delay as possible.

B. Any operational functions of the existing plant that are required to be done to facilitate Contractor's operation will be done by the plant personnel only.

C. The plant operation and maintenance personnel will cooperate in every way that is practicable in order to expedite Contractor's operation; however, if it is necessary for the proper operation or maintenance of portions of the plant, the Contractor shall reschedule his operations so there shall be no conflict with necessary operations or maintenance of the plant.

3.5 SHUTDOWNS

A. Shutdowns of the plant operations shall be accomplished by County operating personnel only when properly coordinated in advance by the Contractor with the Engineer in accordance with the requirements of this section.

1. The Contractor shall submit a detailed outage plan and time schedule for operations which will make it necessary to remove a tank, pipeline, channel, electrical conduit, equipment or structure from service.

2. The plan shall be submitted to the Engineer for review and approval at least two weeks prior to the scheduled outage.

3. The schedule shall be coordinated with the overall construction schedule and shall meet the restrictions and conditions specified in this section. The detailed plan shall describe the Contractor’s method for preventing bypassing of other treatment units, the length of time required to complete said operation, the necessary personnel and equipment which the Contractor shall provide in order to prevent bypassing of associated treatment units.

4. The plan shall also include a contingency plan if the work cannot be completed as scheduled.

5. The Contractor shall not proceed with the subject work until the submitted plan has been returned to the Contractor with the approval of both the Engineer and the Owner. All costs for preparing and implementing both the outage and contingency plans shall be borne by the Contractor.

6. Contractor shall provide a minimum of two weeks advanced notice in writing for all shutdowns.

B. Shutdowns shall be allowed only when, in the opinion of County operating personnel and the Engineer, projected sewage flows can be safely stored or handled for the duration of the shutdown.

C. All shutdowns shall be kept to the absolute minimum in duration and number.

D. Shutdowns shall be coordinated so that as many items of work requiring such shutdowns as possible can be executed concurrently.

E. The Contractor shall seal off all potential sources of leaks and/or overflows associated with the construction and shall remove all loose materials from the structures and piping prior to resumption of flow at the end of a shutdown.

F. No scheduled shutdown of flow shall begin until all necessary materials and equipment for completion of that work are on the job site and have been checked by the Engineer. This requirement shall not relieve the Contractor of any of his responsibility for completion of the project within the period allowed, but is only to reassure the County and the Engineer that the work item can be completed as scheduled.

G. Piping shutdowns shall be scheduled by the Contractor in coordination with the Engineer and plant operating personnel at least two weeks in advance.

H. Shutdowns shall be initiated and completed only during normal working hours of plant operating personnel.

I. Equipment required for bypass pumping or flow diversions during construction shall be provided, maintained and operated by the Contractor continuously on a 24 hour daily basis. The Contractor shall arrange for refueling of equipment as necessary and shall make appropriate arrangements for back-up equipment in case of failures.

3.6 INTERFERENCE WITH EXISTING LINES AND FACILITIES

A. The Contractor will be required to relocate or replace any pipe lines, electric conduits, or other facilities which must be disturbed for new construction work and which are required for plant operation, or make other arrangements satisfactory to the Engineer. Such relocation and replacement may be of temporary type, to be used until work is completed. In the event of accidental damage to existing lines resulting in interruption of service to yard or building lighting circuits or to any other facility which may be needed for use by the Owner prior to the Contractor's next regularly scheduled work period, the Contractor shall repair to the satisfaction of the Engineer such lines prior to stopping work on the day of such damage.

B. At no cost to the owner, the Contractor will be required to relocate or replace any vaults, boxes, posts, or other facilities which must be disturbed for new construction work and which are required for plant operation, or make other arrangements satisfactory to the Engineer. This includes, but is not limited to, raising or lowering elevations of existing facilities to align with new finish grade.

3.7 DEWATERING AND CLEANING OF STRUCTURES AND PIPELINES

A. The operating staff will dewater structures and pipelines to the extent this can be accomplished through existing valving and facilities. It will be the Contractor's responsibility to provide necessary pumps, piping, and other equipment to complete the drainage of the structures and pipelines. Dewatering operations shall be conducted in close coordination with operating staff, and no discharges to drainage courses will be permitted.

B. All flushing and cleaning of dewatered structures shall be done by the Contractor in a manner satisfactory to the Engineer. In all cases the Contractor shall conform with OSHA requirements for work in confined spaces, including the provision of adequate ventilation.

3.8 WORK CONSTRAINTS

A. Greenhouse gas control strategies must be employed by the contractor, including carpool encouragement, reduced trip generation, no idle vehicles longer than five minutes, off-road construction diesel engines shall meet Tier 2 California Emissions Standards. Once accepted by Engineer, Contractor must submit plan to the appropriate regulatory agency for their approval.

B. A Noise Control Plan, provided by the Contractor for engineering review and acceptance, must be in place and a copy of the Noise Control Plan be kept on site. All construction equipment shall be fitted with factory installed muffling devises and maintained in good working order.

C. A Dust and Emission Control Program, provided by the Contractor for engineering review and acceptance, must be in place prior to any construction activities. Once accepted by Engineer, Contractor must submit plan to the appropriate regulatory agency for their approval.

D. New pipe tie-ins to existing pipe lines: The County does not guarantee that existing valves, gates, and stop plates will completely stop flow within pipe line or structure. The Contractor is to include all costs in its bid to isolate existing flows as needed for new construction.

E. Septage Pump Station: During tie-in to the existing septage Pump Station, Contractor shall provide temporary pumping facilities with compatible variable frequency drives for septage/raw sewage pumping capable of handling a peak combined total flow of 700 gpm at 34 feet TDH. Contractor shall provide duty and fully redundant standby equipment

including but not limited to: Pumps, generators, alarms, etc., at all times during temporary pumping. Contractor shall submit a detailed temporary pumping facilities plan for review and approval by the Engineer at least four (4) weeks before beginning the temporary septage pumping. This plan shall provide specific manufacturer's product information for all temporary equipment, piping, instrumentation and electrical to be used by Contractor. All equipment used for temporary pumping facilities shall be in excellent condition.

1. Alternatively, this pump station may be taken off-line during the night (between 8pm and 8am) or on the weekend (Saturday and Sunday). If nigh or weekend activity is to take place, it must be approved by the Owner.

3.9 SEQUENCE OF CONSTRUCTION

A. General: The work shall be accomplished in an order that will allow continued operation (except for temporary shutdowns as specified herein) of the wastewater treatment plant as required to prevent the discharge of untreated or partially treated wastewater. To that end, basic requirements that cannot be violated unless specifically approved by the Engineer are established and a suggested order of work is presented below. The Contractor shall be responsible for final determination of the order of work, subject to the basic rules and other requirements herein.

B. Basic Requirements

1. Except for authorized bypasses to accommodate required modifications, all existing plant operations shall be maintained functionally operable until all new work to be installed under this Contract is completely operable, has been functionally tested in a satisfactory manner, and written notice of acceptance has been received from the Engineer.

2. No work may begin on the project site(s) until all contracts, bonds, and insurance coverage documents have been fully executed and a written Notice to Proceed has been issued to the Contractor.

3. No other work may begin at the project site(s) until the Contractor has satisfactorily produced the required Stormwater Pollution Prevention Plan (SWPPP) and implemented appropriate stormwater runoff control facilities, all in accordance with requirements set forth in Specification Section 02270 – Stormwater Runoff Control Program.

4. Provisions for adequate stormwater runoff collection and conveyance, and protection of the environment in accordance with these Specifications and the project Stormwater Pollution Prevention Plan (SWPPP) shall be maintained at all times.

C. Recommended Sequences

1. Installation of the new septage receiving station headworks facilities (screen, aerated grit chamber, grit classifier, and drain pumps) shall be satisfactorily functionally

tested, per specification section 01670, prior to shutdown of the existing septage receiving station.

D. A shutdown of the existing septage pump station will be required to complete the tie-in of raw sewage drain piping from the new septage receiving station headworks facilities. The shutdown will be implemented by providing temporary pumping into the digester or night/weekend work, as defined in part 3.8.

END OF SECTION

SECTION 01050

SURVEY CONTROL

PART 1 GENERAL

1.1 DESCRIPTION

This section describes the survey information the Owner will provide to the Contractor.

1.2 SURVEY CONTROL INFORMATION PROVIDED BY OWNER

No survey controls will be provided by the Owner. Reference baseline shall be from corner of existing Digester No.2.

1.3 SURVEY CONTROL PROVIDED BY CONTRACTOR

All survey control necessary to complete the work to the lines and grades shown in the contract documents, other than provided for in Section 1.2, shall be provided by the Contractor at no additional cost to the Owner.

1.4 TOLERANCES FOR CONTRACTOR' S MEASUREMENTS

The Contractor's measurements for all stakes, marks, or points set for line, grade, or distance shall be to the nearest 1/100 foot and shall not deviate by more than 2/100 foot from the control line, grade, or distance except as follows:

A. Slope stakes for rough excavation may be set to the nearest 1/10 foot;

B. Trench subgrade shall be established to within 1/10 foot above plan subgrade. The use of a grade pole to establish trench subgrade will be permitted; and

C. Pipe subgrade and joint stakes shall be set to within 2/100 foot of plan subgrade and joint station. Use conventional survey instruments and techniques whenever this degree of accuracy cannot be obtained by use of a grade pole.

The Contractor's measurements of lines, grades, and distances will be subject to checking by the Owner's Representative. The Contractor shall correct immediately any such measurements that do not comply with the above tolerances.

PART 2 MATERIALS

Not used.

PART 3 EXECUTION

3.1 DESCRIPTION

The Contractor is responsible for protecting and maintaining all survey control on the project at no additional cost to the Owner.

END OF SECTION

SECTION 01200

PAYMENT PROCEDURES

PART 1 GENERAL

1.1 SUMMARY

Section includes procedures for submitting applications for payment and means used as a basis for Progress Payments, including:

A. Cost Summaries.

B. Payment for Mobilization.

C. Start-up.

D. Demobilization.

1.2 RELATED SECTIONS

Section 01320: Schedule of Values.

1.3 BASIS FOR PROGRESS PAYMENTS

A. Base Application for Payment on the breakdown of costs for each scheduled activity in the Progress Schedule and the Percentage of Completion for each activity.

B. Generate Application for Payment by downloading cost data from the Progress Schedule to a spreadsheet type format. Identify each activity on the Progress Schedule that has a cost associated with it, the cost of each activity, the estimated Percent Complete for each activity, and the Value of Work Completed for both the payment period and job to date.

C. A condition of the processing of Progress Payments shall be the satisfactory maintenance and final submittal of the Contractor's record documents, as determined by the Engineer.

1.4 COST SUMMARIES

A. Prepare Summary of Cost Information for each subcategory of each Major Item of Work listed in the Schedule of Values. Identify the Value of Work Completed for both the payment period and job to date.

B. Cash Flow Summary: Prepare cash flow summary, indicating total dollar amount of work planned for each month of the project. Equate sum of monthly amounts to Lump Sum contract price.

1.5 PAYMENT FOR MOBILIZATION

A. Limit amounts included under Mobilization to the following items:

1. Moving on the site any equipment required for first month operations.
2. Installing temporary construction power and wiring.
3. Developing construction water supply.
4. Providing field office trailers complete with all specified furnishings and utility services including telephones.
5. Providing on-site sanitary facilities and potable water facilities as specified.
6. Arranging for and erection of Contractor's work and storage yard.
7. Subcontractor insurance and bonds.
8. Obtaining all required permits, licenses, and fees.
9. Developing construction schedule.
10. Provide and erect the project sign.
11. Contractor bonds and insurance.

B. Furnish data and documentation to substantiate the amounts claimed under mobilization.

C. Limit price for mobilization to no more than 5 percent of Contract Price.

1.6 PAYMENT FOR START-UP AND DEMOBILIZATION

Prices for start-up and demobilization must total at least 3 percent of Contract Price.

PART 2 MATERIALS

Not used.

PART 3 EXECUTION

Not used.

END OF SECTION

SECTION 01300

SUBMITTALS

PART 1 GENERAL

1.1 DESCRIPTION

Submittals covered by these requirements include manufacturers' information, shop drawings, test procedures, test results, samples, requests for substitutions, trench safety plan and miscellaneous work-related submittals. Submittals shall also include, but not be limited to, all mechanical, electrical and electronic equipment and systems, materials, reinforcing steel, fabricated items, detailed piping layout drawings, and conduit details. The Contractor shall furnish all drawings, specifications, descriptive data, certificates, samples, tests, methods, schedules, and manufacturer's installation and other instructions as specifically required in the contract documents to demonstrate fully that the materials and equipment to be furnished and the methods of work comply with the provisions and intent of the Contract Documents. All calculations and dimensions included in submittals shall be provided in English units.

1.2 RELATED WORK SPECIFIED ELSEWHERE

A. Section 01010 - General Construction Information and Requirements

B. Section 01200 - Payment Procedures

C. Section 01310 - Construction Schedule

D. Section 01320 - Schedule of Values

E. Section 01680 – Operation and Maintenance Manuals

1.3 SUBMITTAL PROCEDURE

A. The Contractor shall prepare and submit to the Owner within two weeks after the date of the Preconstruction Conference a complete list of shop drawings and material submittals intended to be delivered. No payment will be made to the Contractor until this list is reviewed and found acceptable to the Owner and the Resident Engineer.

B. At least 30 days prior to his need for approval the Contractor shall forward to the Engineer all submittals required by the individual sections of the specifications. Unless a different number is called for in the individual sections, submit five copies of all operation and maintenance manuals and three specimens of each sample requested; all other submittals shall be delivered in electronic format. Two (2) copies of each submittal will be returned to the Contractor, except all sample specimens will be retained by the Engineer.

1. All submittals shall also be provided in an electronic format which includes all information included in the hard copies. Provide the electronic files on USB flash drive. All text portions shall be provided in MS Word format, spreadsheets in Excel format, drawings in AutoCAD format, graphical portions shall in JPEG

format, and all other documents including but not limited to brochures that need to be scanned shall be provided in a searchable PDF format.

C. Identify all submittals including schedules and operation and maintenance manuals on the transmittal form as included in this Section. Obtain an electronic or original copy from the Engineer. Submittals must include submittal number, specification section, plan page reference number (where applicable), the supplier, etc. The Contractor shall also indicate under "Remarks", if the submittal is on the critical path and requires an expedited review. If the Contractor desires more than two copies of submittal documents, the Engineer's comments shall be transferred by the Contractor onto additional copies at no additional cost to the Owner.

D. Submittals that are related to or affect each other shall be forwarded simultaneously as a package to facilitate coordinated review. Uncoordinated submittals will be rejected. Do not combine unrelated materials in the same submittal.

E. The Engineer reserves the right to require submittals in addition to those called for in individual sections.

F. The Contractor shall schedule submittals to avoid concentration of submittals in a short time period. Scheduling of submittals shall be included in the Contractor's Progress Schedule.

G. Each major mechanical equipment, as detailed in specification Section 00436, submittal shall be bound in a three hole-punched binder, which is sized such that when all material is inserted, the binder is not over 3/4 full. Spiral ring type binders are not acceptable.

1. Each binder shall be appropriately labeled on the front cover with the project name, Contract number, equipment supplier's name, specification section(s), and major material contained therein.
2. An index shall be provided on the inside front cover. This index shall itemize the contents of each tab and subtab section. Also list the project name, Contract number, and equipment supplier's name, address, phone number, and contact person on the index page.

H. If the Contractor submits shop drawings of equipment by manufacturers other than those listed in the specifications, he shall provide the following information with the submittal:

1. The name and address of at least three companies or agencies who are currently using the equipment.
2. The name and telephone number of at least one person at each of the above companies or agencies whom the Engineer may contact.
3. A description of the equipment that was installed at the above locations. The description shall be in sufficient detail to allow the Engineer to compare it with the equipment that is proposed to be installed in this project.
4. Refer to Engineer's approval (1.6, Part C).

I. A copy of the specification section, and all referenced and applicable sections, with any addendum updates included, shall be submitted with each paragraph check-marked to indicated specification compliance or marked to indicate requested deviations from specification requirements. Check marks (✓) shall denote full compliance with a paragraph

as a whole. If deviations from the specifications are indicated, and therefore requested by the Contractor, each deviation shall be underlined and denoted by a number in the margin to the right of the identified paragraph. The remaining portions of the paragraph not underlined will signify compliance on the part of the Contractor with the specifications. The submittal shall be accompanied by a detailed, written justification for each deviation. Failure to include a copy for the marked-up specification sections, along with justification(s) for any requested deviations to the specification requirements, with the submittal shall be sufficient cause for rejection of the entire submittal with no further consideration.

J. For each resubmittal, provide a copy of submittal comments and a separate letter, on company letterhead, identifying how each submittal comment has been addressed in the resubmittal.

1.4 SHOP DRAWINGS

A. The term "shop drawings" includes drawings, diagrams, layouts, schematics, descriptive literature, illustrations, schedules, performance and test data, and similar materials furnished by the Contractor to explain in detail specific portions of the work required by the Contract. All dimensions shall be in English units.

B. The Contractor shall coordinate all such drawings, and review them for legibility, accuracy, completeness, and compliance with contract requirements, and shall indicate his approval thereon as evidence of such coordination and review. Shop drawings submitted to the Engineer without evidence of the Contractor's approval will be returned for resubmission.

C. Approval by the Engineer shall not relieve the Contractor from responsibility for any errors or omissions in such drawings, nor from responsibility for complying with requirements of this Contract, except with respect to variations described and approved in accordance with Paragraph D below.

D. If shop drawings show variations from contract requirements, the Contractor shall describe such variations in writing, separate from the drawings, at time of submission. All such variations must be approved by the Engineer.

1.5 ENGINEER'S APPROVAL

A. The Engineer will indicate his acceptance or disapproval of each submittal, and his reasons for disapproval.

1. If no corrections are required, the copies will be returned marked "NO EXCEPTION NOTED (Confirm)" and work may begin immediately on incorporating the material and equipment covered by the submittal into the project.

2. If limited corrections are required, the copies will be returned marked "NOTE MARKINGS (Confirm)". Work may begin immediately on incorporating the material and equipment covered by the corrected submittal into the project.

3. If insufficient or incorrect data has been submitted, the copies will be returned marked "NOTE MARKINGS (Resubmit)". No work incorporating the material and equipment covered by this submittal into the project may begin until the submittal

has been revised, resubmitted, and returned marked either "NO EXCEPTION NOTED (Confirm)" or "NOTE MARKINGS (Confirm)".

4. If the submittal is unacceptable, the copies will be returned marked "REJECTED (Resubmit)". No work incorporating the material and equipment covered by this submittal into the project may begin until a new submittal has been made and returned marked either "NO EXCEPTION NOTED (Confirm)" or "NOTE MARKINGS (Confirm)".

5. If the submittal was not reviewed by Engineer, the copies will be returned marked "NOT REVIEWED".

B. The Contractor shall not change any drawing after it has been marked "NO EXCEPTION NOTED (Confirm)" or "NOTE MARKINGS (Confirm)", or change any approved equipment or material without written permission of the Engineer. The Contractor shall comply with all submittals as marked by the Engineer, to the extent applicable.

C. If more than TWO submittals for a single item are required because of incorrect or insufficient data, or the submittal is unacceptable, or because the Contractor wishes to change previously approved material, then all costs incurred by the Owner for the additional review shall be deducted from monies due the Contractor.

D. Review by Engineer is for the sole purpose of ascertaining general conformity with design. Contractor is responsible for dimensions, fabrication and construction methods, coordination of sub-trades, detail design of components and errors or omissions on shop

1.6 OPERATION AND MAINTENANCE MANUALS

Manufacturer's printed instructions shall include installation instructions, operating instructions, schematics for electrical and hydraulic systems, maintenance literature, lubrication requirements, and parts lists. Refer to Section 01680, Operation and Maintenance Manuals, for specifics required for the operation and maintenance instructions.

1.7 CERTIFICATES

For those items called for in individual sections, furnish certificates from manufacturers, suppliers, or others certifying that materials or equipment being furnished under the Contract comply with the requirements of these specifications.

1.8 SAMPLES

Samples submitted for preference selection by the Owner or Engineer shall be of sufficient size to clearly illustrate functional characteristics and full range of color, texture, and pattern. A completed submittal review transmittal form must accompany each submitted sample.

1.9 CONSTRUCTION SCHEDULE

As soon as possible after receiving Notice of Award and before any work starts, submit four copies of a Construction Schedule in accordance with Section 01310 showing estimated starting and completion dates for each part of the work. The first progress payment will not be issued until the progress schedule is submitted and approved.

1.10 SCHEDULE OF VALUES

Submit a Schedule of Values (in dollars) in accordance with Section 01320 for the various portions of the work. The schedule shall be based on the Contract Bid Schedule or Bid Form and shall include all bid items. The approved Schedule of Values in conjunction with the approved Construction Schedule will be the basis of the monthly progress payments.

1.11 REVIEW OF SCHEDULES

Submit Schedule of Values and Construction Schedule as a package. Both the Progress Schedule and the Schedule of Values shall be subject to review by Engineer both for format and content.

PART 2 MATERIALS

Not used.

PART 3 EXECUTION

3.1 CONTRACTOR'S JOBSITE DRAWINGS

A. Provide and maintain on the jobsite one complete set of prints of all drawings which form a part of the Contract. Immediately after each portion of the work is installed, indicate all deviations from the original design shown on the Contract Drawings either by additional sketches or ink thereon. Upon completion of the project, deliver this record set to the Engineer.

B. A condition of the processing of Progress Payments shall be the satisfactory maintenance and final submittal of the Contractor's record documents, as determined by the Engineer. The Contractor prepared progress payment estimates shall include an initial block for the Contractor's representative and the Engineer to acknowledge the satisfactory maintenance of the documents.

Submittal Review Form

Project Name: Union Mine WWTP Headworks Project

Contract No: 184032224

Submittal No:

☐ **Resubmittal Received**

Submittal Title:

Spec. No:

Bid Item No.:

Contractor/Subcontractor

Routing Sequence	*Date Received*	*Checked By*	*Date Sent*	*Number of Copies*			
				Orig.	Prints	Email	Mfg.Lit.
XYZ Contractor							
XYZ - CM							
Stantec - Design Engineer							
XYZ - CM							
XYZ Contractor							

Submittal Compliance

☐ We have verified that the material or equipment contained in this submittal meets all the requirements specified or shown (no exceptions).

☐ We have verified that the material or equipment contained in this submittal meets all the requirements specified or shown, except for the following deviations (list deviations, attach separate sheet if necessary)

Submittal Status

A - NO EXCEPTIONS TAKEN

☐ B - MAKE CORRECTIONS NOTED

☐ C - AMEND AND RESUBMIT

☐ D - REJECTED

☐

Contractor Remarks

Engineer Remarks

REVIEW BY STANTEC IS FOR THE SOLE PURPOSE OF ASCERTAINING GENERAL CONFORMITY WITH DESIGN. CONTRACTOR IS RESPONSIBLE FOR DIMENSIONS, FABRICATION AND CONSTRUCTION METHODS, COORDINATION OF SUB-TRADES, DETAIL DESIGN OF COMPONENTS AND ERRORS OR OMISSIONS ON SHOP DRAWINGS.

Submittal Review Comments:

1.
2.
3.

END OF SECTION

SECTION 01305

PROJECT MEETINGS

PART 1 GENERAL

1.1 SUMMARY

A. Project meetings and conferences are an important administration and communication requirement of all project participants. Meetings will address issues related to the Work, review and coordinate progress of the Work and other matters of common interest to project participants, and includes the following:

1. Preconstruction Conference
2. Progress Meetings
3. Progress Schedule and Progress Billing Methods
4. Submittal Meetings
5. Quality Assurance Meetings
6. Pre-installation Meetings
7. Post Construction Meetings
8. Change Order Meetings
9. Special Meetings

B. Any time during the progress of the work, the Owner and the Resident Engineer shall have the authority to require the Contractor and any subcontractor, supplier, or service providers to participate in job-site conferences on matters which require immediate or special attention. Any notice of such conference shall be duly observed and complied with by the Contractor and subcontractors, suppliers, or service providers without extra cost to the Owner. Participation to be defined as via teleconference, video conference, or on-site conferences.

C. This section describes the requirements for calling for and conducting meetings for the Work. Meeting and conference locations and qualified participants will be determined by the Engineer and the Contractor based on the meeting agenda topics.

D. Minutes will be taken by the Contractor for the Pre-Construction Conference(s) and all Progress and Coordination Meetings hereinafter described. Copies of meeting minutes will be distributed to all attendees within five (5) days after meeting. Attendees will have three (3) days to submit comments or additions to minutes received from Contractor. Minutes will constitute final documentation of meeting discussion topics, results and action items. Meetings may be recorded by the Resident Engineer for accuracy of meeting minutes.

E. Representatives of entities participating in meetings shall be qualified and authorized to act on behalf of the entity each represents.

1.2 PRECONSTRUCTION CONFERENCE

A. Within 20 days after the Contract Time starts to run, but before any Work at the site is started, the Resident Engineer will schedule a preconstruction conference and organizational meeting at a suitable conference room at the Owner's offices or other suitable location. More than one preconstruction conference may be required if the Owner and Contractor deem it is in the best interest of the project to do so. The Resident Engineer will preside at conference.

B. Attending the Preconstruction Conference: Contractor's Project Manager, Contractor's Superintendent(s), Owner, Resident Engineer, Inspection staff, Design Engineer, Owner's subconsultants, representatives of utilities, major subcontractors and others involved in performance of the Work, and others necessary to agenda.

C. The preconstruction conference will be held to establish a working understanding among the parties as to the Work, and to discuss the project schedule, procedures for handling shop drawings and other submittals, processing Applications for Payment, and maintaining required records.

D. The Preconstruction conference agenda will include:

1. Distribution of Contract Documents.
2. Distribution and discussion of list of major subcontractors and suppliers.
3. Proposed progress schedules and critical construction sequencing.
4. Major equipment deliveries and priorities.
5. Project coordination.
6. Designation of responsible personnel.
7. Procedures and Processing of:
    a. Field decisions.
    b. Proposal requests.

c. Submittals.

d. Change Orders.

e. Applications for Payment.

f. Record Documents.

8. Use of Premises:

a. Office, construction, and storage areas.

b. Owner's requirements.

9. Construction facilities, controls, and construction aids.

10. Temporary utilities.

11. Safety and first aid procedures.

12. Security procedures.

13. Housekeeping procedures.

E. The Engineer will record minutes of meeting and distribute copies of minutes within five (5) days of the meeting to participants and interested parties.

1.3 PROGRESS MEETINGS

A. Regular progress meetings shall be conducted at least once a week in the Contractor’s field office or other mutually agreed upon place.

B. Written notice and the proposed agenda shall be distributed to each anticipated participant of each meeting at least two (2) days before meeting.

C. The Contractor’s superintendent and subcontractors who are or are actively involved in the Work, or who are necessary to agenda shall attend.

D. The Owner, Engineer, other Owner’s Representatives, representation of the Agency, and others necessary to agenda will attend.

E. The Contractor shall complete and bring the current Application for Payment, marked up record drawings, and Progress Schedule to each meeting.

F. The Contractor shall preside at meetings.

G. The purpose of Progress Meetings is to:

1. Expedite work of subcontractors or other organizations that are not meeting scheduled progress, resolve conflicts, and coordinate and expedite execution of the Work.

2. Review progress of the Work, Progress Schedule, narrative report, Application for Payment, record documents, and additional items of current interest that are pertinent to execution of the Work.

3. Verify:

   a. Actual start and finish dates of completed activities since last progress meeting.

   b. Durations and progress of activities not completed.

   c. Reason, time, and cost data for Change Order Work that will be incorporated into Progress Schedule and application for payment.

   d. Percentage completion of items on Application for Payment.

   e. Reasons for required revisions to Progress Schedule and their effect on Contract Time and Contract Price.

4. Discuss potential problems which may impede scheduled progress and corrective measures.

H. Engineer will record minutes of meeting and distribute copies within five (5) days of meeting to participants and interested parties.

1.4 PROGRESS SCHEDULE AND PROGRESS BILLING MEETINGS

A. Each month the Contractor shall attend a progress schedule and progress payment meeting with the Resident Engineer. At this meeting, the Resident Engineer and Contractor are to review the percentage of the work completed and establish an amount to be requested in the Application for Payment. The meeting date shall be scheduled in accordance with the Owner's deadline for submittal of Progress Pay Estimates. Following review of the proposed billing, the Contractor will prepare an Application of Payment and submit to the Resident Engineer for final review and processing.

B. These meetings will also discuss time impact evaluations for change orders and time extension requests, actual and anticipated schedule activity sequence/duration changes, and Contractor delays. These meetings are considered a critical component of the overall monthly schedule update submittal and Contractor shall have appropriate personnel attend.

C. The Resident Engineer can also call for special progress schedule meetings should there be schedule revisions that necessitate such a meeting.

1.5 SUBMITTAL MEETINGS

When required in the individual technical specification, or if requested by the Contractor or the Resident Engineer, a meeting regarding a required submittal will be held to facilitate the timeliness of the submittal preparation and review process. This meeting will convene at a mutually agreeable place. The party responsible for preparing the submittal shall be in attendance along with the Engineer.

1.6 QUALITY ASSURANCE MEETINGS

The Contractor or the Resident Engineer may request a meeting prior to the start of a particular phase of the project to discuss how the Work shall be accomplished in accordance with the quality requirements of the contract documents, codes, permits and industry standards. All required inspection and testing applicable to this phase of the project will be discussed in detail. The Contractor shall require that all management and quality control personnel employed by the Contractor for this phase of the project are in attendance. Quality assurance meetings might be requested for such phases of the project as site work, concrete, piping, mechanical, specialty subtrades and electrical/instrumentation.

1.7 PRE-INSTALLATION MEETINGS

A. General: The Contractor shall meet with manufacturers and installers of major units of construction which require coordination between subcontractors. Major units of construction which require pre-installation meetings will be identified at the Progress Meetings.

B. Meeting Requirements: The Contractor shall:

1. Require attendance of Superintendent, appropriate manufacturers and installers of major units of constructions, and affected subcontractors.
2. Invite Owner, Engineer, and Agency.
3. Preside at meetings.
4. Conduct meetings in Contractor's field office or other mutually agreed upon place.
5. Distribute to each anticipated participant written notice and agenda of each meeting at least four (4) days before meeting.
6. Schedule meeting at least seven (7) days in advance of installation.

C. The Contractor shall record minutes of meeting and distribute copies of minutes within five (5) days of meeting to participants and interested parties.

1.8 POST CONSTRUCTION MEETING

A. General: The Contractor shall meet with and inspect the Work eleven (11) months after date of Substantial Completion with Owner, Engineer, and Agency.

B. Meeting Requirements: The Contractor shall

1. Arrange meeting at least fourteen (14) days before meeting.

2. Meet in Owner's office or other mutually agreed upon place.

3. Inspect the Work and draft list of items to be completed or corrected.

4. Require attendance of Superintendent, appropriate manufacturers and installers of major units of constructions, and affected subcontractors.

5. Review service and maintenance contracts, and follow-up with appropriate corrective action when necessary.

6. After meetings, complete or correct defective work and extend correction period accordingly.

1.9 CHANGE ORDER MEETINGS

A. Periodic meetings will be held as needed for the purpose of agreeing on change order costs, reviewing quotation requests, and for reviewing time and expense records if necessary.

B. The Resident Engineer shall preside at meetings.

C. The Contractor, Owner, Engineer, other Owner's Representatives, Representatives of the Agency, and other necessary shall attend.

1.10 SPECIAL MEETINGS

Any time during progress of the Work, the Owner and the Resident Engineer shall have the authority to require the Contractor and any subcontractor, suppliers, or service providers to attend job-site conferences on matters which require immediate or special attention. Any notice of such conference shall be duly observed and complied with by the Contractor and subcontractors, suppliers, or service providers without extra cost to Owner.

PART 2 MATERIALS

Not used.

PART 3 EXECUTION

Not used.

END OF SECTION

SECTION 01310

CONSTRUCTION SCHEDULE

PART 1 GENERAL

1.1 DESCRIPTION

This section specifies the procedures for preparing and revising the cost-loaded critical path construction schedule used for planning and managing construction activities. The schedule provides a basis for determining the progress status of the project relative to the completion time, specific dates, and for determining the acceptability of the Contractor's progress payment estimates. No progress payments will be made until the Engineer and Owner's Representative have accepted the Contractor's construction schedule and schedule of values.

1.2 RELATED SECTIONS

A. Section 01020: Modifications of Existing Facilities and Order of Work

B. Section 01300: Submittals

C. Section 01320: Schedule of Values

1.3 SUBMITTALS

A. Within seven (7) days after the Award of Contract, the Contractor shall submit Preliminary Project Schedule (PPS) at the Pre-construction Conference.

B. Contractor shall submit a Baseline Project Schedule (BPS) within thirty (30) days after the Notice to Proceed.

C. Submit cost-loaded schedule data within thirty (30) days after the Notice to Proceed.

PART 2 MATERIALS

2.1 CONSTRUCTION SCHEDULE SOFTWARE

Contractor shall use a software to develop all schedules. This software version shall be approved by the Owner's Engineer.

PART 3 EXECUTION

3.1 GENERAL REQUIREMENTS

A. The Engineer considers the project schedule requirements to be of significant importance to both the Contractor and the Engineer.

B. All schedule submittals shall include two (2) copies of the following:

1. An electronic copy of the schedule on USB drive.
2. A time-scaled logic diagram or a time-scaled bar chart.
3. A tabular report that shows early start, early finish, late start, late finish, original duration, remaining duration, total float and percentage completion appropriately organized and sorted by building, site zones, and major activity codes.
4. Except for time extension requests, a cost report must be provided listing each activity and its associated cost, percentage of work accomplished, earned value to date, previous payments and amount earned for the update period. For all new or redefined activities created through updates, change orders, or for fragnet delay analyses for time extension requests, a cost report should also be provided listing each new or redefined activity and its associated cost.
5. A cash flow envelope report and cash flow projection diagram (S-curves) shall be submitted with the finalized, cost-loaded baseline project schedule. This report and diagram shall be based on the planned monthly progress billings expressed as a percentage of the total project cost. The report and diagram shall calculate and show two projections – one based on early starts/early finishes, and another based on late starts/late finishes. Monthly Schedule Updates (MSU) shall show actual billings plotted against early and late curves.

C. The Construction Schedule shall be the basis for evaluating the job progress, payment requests, and time extension requests. The responsibility for developing the contract schedule, accurately updating the schedule, and monitoring the actual progress of the work compared to the planned schedule rests solely with the Contractor.

Failure of the Contractor to include any element of the work or any inaccuracy in the Contract Schedule will not relieve Contractor from the responsibility for accomplishing all the work in accordance with the Contract requirements.

D. Float for any activity, milestone completion date or contract completion date shall be considered a resource available to both the Owner and the Contractor. Neither the Owner nor the Contractor has exclusive ownership of the float. Float shall be a resource to all parties, and shall be consumed by whoever utilizes it first.

E. Early completion schedules may be prohibited due to certain physical or monetary constraints imposed upon the Owner. If an early completion schedule is not prohibited, and is contemplated by the Contractor as part of its bidding strategy, it is hereby expressly understood by the Contractor that early completion schedules will only be acceptable under the condition that the schedule be reasonable and realistic, and if the Contractor certifies that it has included general conditions costs in its bid sufficient for the entire contractual time of performance. It is also understood, therefore, that no damages for delay will be recoverable if the project is prolonged beyond the early completion date, but still completed within the entire contract duration.

F. Progress payments may be withheld in whole or part should the Contractor fail to comply with the requirements of this section.

3.2 DESCRIPTION

A. The Contractor shall prepare a time scale network schedule using a critical path method (CPM). The critical path schedule shall be prepared from estimates of the required duration and sequence for each item of work and function to be performed. A general guide for preparing such a schedule is contained in “Construction Planning and Scheduling Manual” published by the Associated General Contractors of America. Tabulation and analysis of the work schedule shall be performed by computer using a commercially available critical path software program. Contractor to provide one licensed complete set of scheduling software to the Engineer at no additional cost to the Owner/Engineer. In addition to the capability to produce tabular reports, the computer software shall plot the construction schedule after the Contractor has produced it in draft form as required by paragraph 3.2.

B. The schedule shall depict all significant construction activities and all items of work listed in the breakdown of contract prices submitted by the Contractor in accordance with Section 01320, Schedule of Values. Assigned values for each part of the work shall be indicated. The dependencies between activities shall be indicated so that it may be established what effect the progress of any one activity has on the schedule. Any milestone activities identified in specification Section 01020 must be indicated. Critical dates for Owner furnished Contractor installed materials shall be indicated showing reasonable delivery periods.

C. Completion time and all specific dates given in the Contract Documents shall be shown on the schedule. Activities making up the critical path shall be identified.

D. No activity on the schedule shall have a duration longer than 30 days or assigned value greater than $50,000, except activities comprising only fabrication and delivery may extend for more than 31 days. Activities which exceed these limits shall be divided into more detailed components. The scheduled duration of each activity shall be based on the work being performed during the normal 40-hour work week with allowances made for legal holidays and normal weather conditions.

E. In addition to the overall schedule, the Contractor shall provide a schedule of the first 60 calendar days at the preconstruction meeting and a three-week bar chart schedule to be provided weekly after acceptance of the overall schedule.

1. This 60-day schedule shall use the same activity names as will be used on the base line schedule. This 60-day schedule shall serve as a control document while the overall schedule is in the approval process.

2. The three-week bar chart schedule shall be provided weekly for review the day prior to the normal weekly construction meeting. The format shall be one week of history and two weeks of look ahead. It shall be on a work crew level but with schedule activity numbers clearly indicated. It shall be directly produced from the approved project CPM schedule database, not independently from some other data.

3.3 SUBMITTAL PROCEDURES

A. The Contractor shall provide a schedule of the first 60 calendar days of the project at the preconstruction meeting as a condition to receiving the notice to proceed. This 60-day schedule shall be prepared on reproducible paper and may be in draft form with legible freehand line and lettering.

B. Within 30 days after the date of the Notice to Proceed, the Contractor shall complete a construction schedule conforming to paragraph 3.1 and representing in detail all planned procurement and on-site construction activities. Upon completion of the schedule, the Contractor shall submit the original and two copies to the Engineer in accordance with Section 01300. The schedule shall be prepared on reproducible paper. A computer diskette of the database clearly labeled and dated, shall be provided to the Construction Manager to facilitate analysis by the Engineer and Owner's Representative.

C. Within 14 days after receipt of the submittal, the Engineer and the Owner's Representative shall review the submitted schedule and return one copy of the marked up original to the Contractor. If the Engineer finds that the submitted schedule does not comply with specified requirements, the corrective revisions will be noted on the submittal copy returned to the Contractor for corrections and re-submittal as specified in Section 01300. Upon receipt of a schedule and breakdown of contract prices conforming to the contract, the Contractor shall submit the final version of the construction schedule and database to the Engineer in accordance with Section 01300.

Within 14 days after the Engineer has accepted the Contractor's construction schedule and values assigned to the activities of the construction schedule, the Contractor shall provide

two copies of computer reports to the Engineer. The reports will be on 8-½ -inch by 11-inch sheets as follows:

1. Tabular listing of activities showing early and late start and finish dates.
2. Printout network, clearly showing the critical path (22" x 34").
3. Report on cost and payment status for each activity (this will also be provided with each payment request).
4. Summary of the costs for each facility (i.e., screen, aerated grit tank, classifier, drain pumping, etc.).

These reports will serve as the basis for the Contractor's progress payment requests. Acceptance of the Contractor's schedule and furnishing reports to the Engineer shall not relieve the Contractor of his responsibility for the adequacy of the schedule and for managing all construction activities including those of subcontractors and suppliers.

D. After acceptance of the overall construction schedule, the Contractor shall submit the three-week bar chart schedules on a weekly basis.

3.4 SCHEDULE REVISIONS

Revisions to the accepted cost-loaded construction schedule may be made only with written approval of the Engineer and Owner. Changes in timing for activities which are not on the critical path may be modified within the available period of the activities' specific available float but not in a manner which will place them on the critical path, with the written agreement of the Contractor and Engineer. A change affecting the contract value of any activity, the timing of any activity on the critical path, the completion time and specific dates (Special Provisions) may be made only in accordance with the General Conditions.

3.5 PROJECT STATUS UPDATE

Project schedule status and update on computer diskette shall be provided each month and submitted with the monthly pay request. Monthly progress payments will not be made until the project status reviews have been submitted and accepted by the Engineer. Project status updates shall be submitted to the Engineer in accordance with Section 01300, including a completed submittal review transmittal form.

END OF SECTION

SECTION 01330

SAFETY PLAN

PART 1 GENERAL

1.1 SUMMARY

A. The Contractor shall be solely and completely responsible for conditions of the jobsite, including safety of all persons and property during performance of the Work. This requirement shall apply continuously and not be limited to normal working hours. Safety provisions shall conform to U.S. Department of Labor (OSHA), the California Occupational Safety and Health Act (CalOSHA), and all other applicable Federal, State, County, and local laws, ordinances, codes, including but not limited to the requirements set forth below, and any regulations that may be detailed in other parts of these Contract Documents. In the event of conflicting requirements, the most stringent requirement as it pertains to the Contractor's safety responsibility shall be followed by the Contractor.

B. No provision of the Contract Documents shall act to make the Owner, the Construction Manager, Engineer or any other party than the Contractor responsible for safety. The Contractor agrees that for purposes of California Labor Code Section 6400 and related provisions of law the Contractor, the Contractor's privities and any other entities acting pursuant to this contract will be "employers" responsible for furnishing employment and a place of employment that is safe and healthful for the employees, if any, of such entities acting pursuant to this contract and that neither the Owner nor the Construction Manager, Engineer or their respective officers, officials, employees, agents or volunteers or other authorized representatives will be responsible for having hazards corrected and /or removed at the location(s) where the work is to be performed. The Contractor agrees that neither the Owner nor the Construction Manager, Engineer or their respective officers, officials, employees, agents or volunteers or other authorized representatives will be responsible for taking steps to protect the Contractor's employees from such hazards, or for instructing the Contractor's employees to recognize such hazards or to avoid the associated dangers. The Contractor agrees that with respect to the work to be performed under this contract and the location(s) where such work is to be performed, the Contractor will be responsible for not creating hazards, and for having hazards corrected and/or removed. The Contractor agrees that through the safety obligations contained in this contract and the Contractor's own inspection of the site(s) where the contract work is to be performed, the Contractor is aware and has been notified of the hazards to which the Contractor's employees may be exposed in the performance of contract work. The Contractor has taken and/or will take appropriate, feasible steps to protect the Contractor's employees from such hazards, and has instructed and/or will instruct its employees to recognize such hazards and how to avoid the associated dangers. The Contractor agrees that neither the Owner nor the Construction

Manager, Engineer or their respective officers, officials, employees, agents or volunteers or other authorized representatives will be “employers” pursuant to California Labor Code Section 6400 and related provisions of law with respect to the Contractor, the Contractor's privities or other entities acting pursuant to this contract.

C. The Contractor shall indemnify, defend and hold Owner and Construction Manager, Engineer and their respective officers, officials, employees, agents and volunteers or other authorized representatives harmless to the full extent permitted by law concerning liability related to the Contractor’s safety obligations.

D. If death or serious injuries or serious damages are caused, the accident shall be reported immediately by telephone or messenger to both the Construction Manager and the Owner. In addition, the Contractor shall furnish the Construction Manager with a copy of the Employer's Report of Injury immediately following any incident requiring the filing of said report during the prosecution of the Work under this Contract. The Contractor shall also furnish the Construction Manager with a copy of the Employer's Report of Injury involving any subcontractors on this Project. The Contractor shall make all reports as are, or may be, required by any authority having jurisdiction, and permit all safety inspections of the Work being performed under this Contract.

E. If a claim is made by anyone against the Contractor or any subcontractor on account of any accident, the Contractor shall promptly report the facts in writing to the Construction Manager, giving full details of the claim.

1.2 SAFETY STANDARDS

The Contractor shall comply with all applicable provisions of the Safety and Health Regulations of Construction, promulgated by the Secretary of Labor under Section 107 of the Contract Work Hours and Safety Standards Act (40 USC 327 et. seq.) as set forth in Title 29, C.F.R., CAL/OSHA, and the regulations issued thereunder. Compliance shall be the Contractor's sole responsibility, and neither the Owner, the Construction Manager nor the Engineer shall have any liability for non-compliance for additional safety requirements.

1. A copy of the Project Specific Safety Plan shall be delivered to the Owner within 30 days of the Notice to Proceed. Plan shall include, but is not limited to, biological hazards associated with wastewater, hazardous atmospheres, chemicals, fuels, and compressed gases, and/or physical hazards in the form of operating machinery, high voltage electrical systems and moving and stored water.
2. A copy of the Project Specific Safety Plan shall be maintained on site and available for review.

1.3 SAFETY PROGRAM

The Contractor shall establish, implement, and maintain a written injury prevention program as required by Labor Code Section 6401.7. Before beginning the Work, the Contractor shall file with the Construction Manager a written Contractor Safety Program that provides for the implementation of all of the Contractor's safety responsibilities in connection with the Work at the Project site and the coordination of that program and its associated procedures and precautions with safety programs, precautions and procedures of each of its subcontractors and other Contractors performing work at the Project site. The Contractor shall be solely responsible for initiating, maintaining, monitoring, coordinating, and supervising all safety programs, precautions, and procedures in connection with the Work and for coordinating its programs, precautions, and procedures of the other contractors and subcontractors performing the Work at the Project site. The Safety Program should contain all the necessary elements for the Contractor to administer its program on the Project site. At a minimum, this written Safety Program shall address the elements required by Labor Code Section 6401.7.

The Contractor's compliance with requirements for safety and/or the Construction Manager's acceptance for filing of the Contractor's Safety Program shall not relieve or decrease the liability of the Contractor for safety. The Construction Manager's review of the Contractor's Safety Program is only to determine if the above listed elements are included in the program.

1.4 SAFETY PLAN

A. Detail the Methods and Procedures to comply with California, Federal, and Local Health and Safety Laws, Rules and Requirements for the duration of the Contract Times. Include the following:

1. Identification of the Certified or Licensed Safety Consultant who will prepare, initiate, maintain and supervise safety programs, and procedures.
2. Procedures for providing workers with an awareness of safety and health hazards expected to be encountered in the course of construction.
3. Safety equipment appropriate to the safety and health hazards expected to be encountered during construction. Include warning devices, barricades, safety equipment in public right-of-way and protected areas, and safety equipment used in multi-level structures.
4. Methods for minimizing employees' exposure to safety and health hazards expected during construction.
5. Procedures for reporting safety or health hazards.
6. Procedures to follow to correct a recognized safety and health hazard.
7. Procedures for investigation of accidents, injuries, illnesses and unusual events that have occurred at the construction site.
8. Periodic and scheduled inspections of general work areas and specific work stations.
9. Training for employees and workers at the jobsite.

10. Methods of communication of safe working conditions, work practices and required personal protection equipment.

B. Assume responsibility for every aspect of Health and Safety on the jobsite, including the health and safety of Subcontractors, suppliers, and other persons on the jobsite.

1. Forward available information and reports to the Safety Consultant who shall make the necessary recommendations concerning worker health and safety at the jobsite.

2. Employ additional health and safety measures specified by the Safety Consultant, as necessary, for workers in accordance with OSHA guidelines.

C. Transmit to Owner and Engineer copies of reports and other documents related to accidents or injuries encountered during construction.

D. A copy of the Project Specific Safety Plan shall be delivered to the Owner within 30 days of the Notice to Proceed. Plan shall include, but is not limited to, biological hazards associated with wastewater, hazardous atmospheres, chemicals, fuels, and compressed gases, and/or physical hazards in the form of operating machinery, high voltage electrical systems and moving and stored water.

E. A copy of the Project Specific Safety Plan shall be maintained on site and available for review.

1.5 SAFETY SUPERVISOR

A. The Contractor shall appoint an employee as safety supervisor who is qualified and authorized to supervise and enforce compliance with the Safety Program. The Contractor shall notify the Construction Manager in writing prior to the commencement of work of the name of the person who will act as the Contractor's safety supervisor and furnish the safety supervisor's resume to the Construction Manager.

B. The Contractor will, through and with its Safety Supervisor, ensure that all of its employees and its subcontractors of any tier, fully comply with the Project Safety Policies. The Safety Supervisor shall be a full-time employee of the Contractor whose responsibility shall be for supervising compliance with applicable safety requirements on the Project site and for developing and implementing safety training classes for all job personnel. The Owner shall have the authority to require removal of the Contractor's Safety Supervisor if the representative is judged to be improperly or inadequately performing the duties; however, this authority shall not in any way affect the Contractor's sole responsibility for performing this work safely, nor shall it impose any obligation upon the Owner to ensure the Contractor performs its work safely.

1.6 SAFETY AND PROTECTION

A. The Contractor shall take all necessary precautions to prevent damage, injury, and loss to:

1. All employees on the Project, employees of all subcontractors, and other persons and organizations who may be affected thereby;

2. All the Work and materials and equipment to be incorporated therein, whether in storage on or off the site; and

3. Other property at the site or adjacent thereto, including trees, shrubs, lawns, walks, wetlands, pavements, roadways, structures, utilities, and underground facilities not designated for removal, relocation, or replacement in the course of construction.

B. The Contractor shall comply with all applicable laws and regulations of any public body having jurisdiction for the safety of persons or property or to protect them from damage, injury or loss and shall erect and maintain all necessary safeguards for such safety and protection. The Contractor shall notify owners of adjacent property and of underground facilities and utility districts when prosecution of the Work may affect them and shall cooperate with them in the protection, removal, relocation, and replacement of their property. All injury or loss to any property caused, directly or indirectly, in whole or in part, by the Contractor, any subcontractor, supplier or any other person or organization directly or indirectly employed by any of them to perform or furnish any of the Work or anyone for whose acts any of them may be liable, shall be remedied by the Contractor.

C. General Safety Requirements

1. No smoking shall be allowed inside wastewater treatment plant boundary or in any area designated No Smoking or Flammable Storage, unless specifically authorized by Owner.
2. All acts or conditions believed to be unsafe shall be promptly reported to the nearest employee of the Owner
3. All acts or conditions believed to be unsafe shall be promptly reported to the nearest employee of the Owner, to the Owner's Project Manager, and provide to the Owner (before the end of the workday the unsafe condition or act was observed) a completed Contractor's Report of Unsafe Condition/Act Form (see Appendix A of this specification).
4. Contractors are responsible for providing their employees with the required safety equipment such as, but not limited to, gas detection meters, rescue equipment, and personal protective equipment.
5. Contractor shall not move or relocate the Owner's first-aid equipment, blankets, stretchers, emergency eyewash/shower units, or any other safety equipment, without the permission of the Owner.
   Contractors who damage equipment or pipes, or drop objects into tanks, shall report the incident immediately to the nearest employee of the Owner and complete the Contractor's Report of Damage to Owner's Equipment or Property Form (see Appendix A of this specification).

1.7 EXCAVATION SAFETY

A. In accordance with the provisions of Section 6705 of the Labor Code, the Contractor shall submit, in advance of excavation of any trench or trenches five feet or more in depth, a detailed plan showing the design of shoring, bracing, sloping, or other provisions to be made for worker protection from the hazard of caving ground during the excavation of such trench or trenches. If such plans vary from the shoring system standards set forth in the Construction Safety Orders of the Division of Industrial Safety in Title 8, Subchapter 4, Article 6, California Code of Regulations, the plans shall be prepared and signed by a registered civil or structural engineer employed by the Contractor, and all costs therefore shall be included in the price named in the Contract for completion of the work as set forth in the Contract Documents. Nothing in this Section shall be deemed to allow the use of a shoring, bracing, sloping, or other protective system less effective than that required by the Construction Safety Orders. Nothing in this Section shall be construed to impose a tort liability on the Owner, the Engineer, the Construction Manager, nor any of their officers, officials, employees, agents, consultants or volunteers. The Owner's review of the Contractor's excavation plan is only for general conformance to the Construction Safety Orders.

B. If there is a potential atmospheric hazard such as oxygen deficiency or toxic gases, the atmospheres in the excavation shall be tested before employees enter any excavation.

C. Contractor shall have a competent person on-site who will make daily inspections of excavations, adjacent areas, and protective systems. The competent person will be responsible for ensuring that the protective system is based upon soil classifications, and that it provides the required protection in accordance with CCR, Title 8, Section 1541.1.

D. Sloping or benching for excavations greater than 20 feet deep shall be designed by a registered civil engineer. Design specifications shall be submitted to the Owner upon request.

E. Prior to commencing any excavation, the Contractor shall designate in writing to the Construction Manager the "competent person(s)" with the authority and responsibilities designated in the Construction Safety Orders.

1.8 SAFETY EMERGENCIES

A. In emergencies affecting the safety or protection of persons or the Work or property at the Project site or adjacent thereto, the Contractor, without special instruction or authorization from the Construction Manager, is obligated to act to prevent threatened damage, injury or loss. The Contractor shall give the Construction Manager prompt written notice if the Contractor believes that any significant changes in the Work or variations from the Contract Documents have been caused thereby.

B. All accidents involving lost work time or damaged Owner's property shall be reported to the Owner or designee on the same workday the incident occurred. A copy of the Contractor's Injury/Fatality Incident Report and/or the Contractor's Report of Damage to Owner's Equipment/Property shall be provided to Owner or its representative within 24 hours of the incident. See Appendix A of this specification for forms.

C. Should a serious accident or emergency occur, or if an emergency requires off-site emergency responders (police, fire, medical, etc.), Contractor shall immediately notify, including nights, weekends, and holidays, the Owner using contact information provided in the Emergency Contact Information Form (see Appendix A of this specification).

D. Should a serious accident or emergency occur, Owner reserves the right to conduct an accident investigation of the incident, either in conjunction with, or separate of, the Contractor. The Contractor shall provide complete access to the Owner's representative(s) and shall allow the Owner's representative(s) to take photos and witness statements.

E. If a claim is made by anyone against the Contractor or any subcontractor on account of any accident, the Contractor shall promptly report the facts in writing to the Owner, giving full details of the claim.

F. Emergency Action Plan

1. Contractor shall have a written Emergency Action Plan that is applicable to the work site and work activities being performed.
2. Contractor is responsible for ensuring the availability of emergency medical services for its employees. Contractor employees who will render basic first aid are to be trained and immediately available. Contractor shall also provide its own first aid kit(s) that contain the minimum first-aid supplies as determined by a licensed physician or in accordance with CCR, Title 8, Section 1512.
3. Contractor shall be apprised of the Owner's site-specific Emergency Action Plan procedures that are applicable to the worksite and Contractor's work activities, including the Owner's emergency alarm system(s).
4. To facilitate prompt emergency services, Contractor shall:
    a. Determine who is responsible for making emergency calls and;
    b. Conspicuously post a list of emergency phone numbers, a map of the closest hospital, known and potential safety hazards, and other information to be transmitted.

1.9 SAFETY VIOLATIONS

Should the Contractor fail to correct an unsafe condition, the Owner shall have the right to notify the Contractor through the Construction Manager that an unsafe condition may exist and must be corrected or the work in question can be stopped until the condition is corrected to the satisfaction of the Owner. No extension of time or additional compensation will be granted as a result of any stop order so issued. The notification and suspension of such work or the failure to provide such notification and suspension by the Owner shall not relieve the Contractor of its sole responsibility and liability for safety and the correction of any unsafe conditions.

The Owner shall have the authority to require the removal from the project of any worker and the foreman and/or superintendent in responsible charge of the work where safety violations occur.

1.10 EQUIPMENT SAFETY PROVISIONS

The completed Work shall include all necessary permanent safety devices, such as machinery guards and similar safety items, required by the State and Federal (OSHA) industrial authorities and applicable local and national codes. Further, any features of the Work, including Owner-selected equipment, subject to such safety regulations shall be fabricated, furnished, and installed in compliance with these requirements. All equipment furnished shall be grounded and provided guards and protection as required by safety codes. Where vapor-tight or explosion-proof electrical installation is required by safety codes, this shall be provided. Contractors and manufacturers of equipment shall be held responsible for compliance with the requirements included herein. The Contractor shall notify all equipment suppliers and subcontractors of the provisions of this paragraph.

1.11 CONFINED SPACES

A. The Project requires work in confined spaces and requires compliance with CAL/OSHA and Federal OSHA requirements. Confined spaces for the purposes of this Section shall be as defined by the Division of Industrial Safety. Work within confined spaces of this project is subject to the definitions and applicable provisions of Section 5156 et. seq., Title 8, Division 1, Chapter 4, Subchapter 7, Group 16, Article 108 of California Code of Regulations, and Title 29 Part 1926 of the Code of Federal Regulations.

B. In addition the Owner classifies the following existing facilities as confined space: the interior of pipelines, vaults, manholes, reservoirs and any other such structure or space which is similarly surrounded by confining surfaces as to permit the accumulation of dangerous gases or vapors. The confined spaces are “permit” confined spaces as defined by OSHA and Cal/OSHA and therefore entry is allowed only through compliance with a confined space entry permit program by the contractor that meets the requirements of 8 C.C.R. Section 5157. While the above mentioned locations have been identified as permit confined spaces, other permit confined spaces may exist. It shall be the responsibility of the Contractor to identify and classify these confined spaces.

C. It is anticipated that the Contractor may encounter hazardous conditions within these permit confined spaces which include, but are not limited to the following:

1. Exposure to hydrogen sulfide, methane, carbon dioxide and other gases and vapors commonly found in municipal wastewater which could have or has the potential of having Immediate Danger to Life or Health Conditions (IDLH).
2. Exposure to atmosphere containing insufficient oxygen to support human life.
3. Exposure to combustible, flammable and/or explosive atmosphere.

4. Exposure to sewage which may contain bacteriological, chemical and other constituents harmful to humans.

5. Work in conditions where engulfment or entrapment may occur.

6. Work in environments which may be slippery and/or have uneven work surfaces.

7. Work in structures where workers may trip, slip and/or fall several feet.

8. Exposure to an oxygen enriched environment.

D. No entry into a confined space shall be permitted until written permission from the Owner has been granted.

E. Whenever Contractor and Owner's personnel are working simultaneously in a confined space, the activities will be coordinated prior to entry so that employees of one employer do not endanger the employees of any other employer. Coordination of entry procedures must include procedures for emergency evacuation.

F. The Contractor shall debrief Owner at the conclusion of the entry operations regarding any hazards confronted or created in permit-required confined spaces during entry operations.

1.12 HAZARD COMMUNICATION

A. No hazardous chemical in quantities greater than 5-gallons or 10-lbs shall be brought onto the Owner's premises without first gaining approval from the Owner using the Request to Use/Store Hazardous Substances on Owner's Property Form (see Appendix A of this specification).

B. SDS's for all hazardous chemicals brought onto Owner's premises shall be kept on the OWNER'S premises and made available to Owner's employees and their representative upon request.

C. Contractors who bring hazardous substances to the work site must take the appropriate safety precautions to protect the Contractor's and Owner's employees from harmful exposure.

D. All hazardous substances not used in the work by the end of the project shall be removed from the work site by the Contractor.

1.13 LOCKOUT/TAGOUT

A. Work involving systems shutdown or startup (e.g. tie-ins, connections, equipment shutdowns, etc.) shall be coordinated with, and approved by, the Engineer and Owner, as required in Specification Section 01020 of the Contract Documents.

B. The Contractor and its representatives are not permitted to take any equipment off line, to open or close valves or turn circuits or control switches off or on. These tasks are to be performed only by Operations & Maintenance personnel designated by the Owner. Under no circumstances shall Contractor initiate shutdown procedures of any work, processes or equipment. The Contractor shall follow the Owner's lockout/tagout procedures.

C. Whenever work is to be performed on any equipment or systems that may result in hazardous energy exposures to workers or other affected personnel, all sources of energy (primary and secondary) shall be de-energized and locked out or blocked first by the Owner's authorized representative and followed by the Contractor.

D. Lockout procedures shall comply with the most stringent applicable standard, (e.g. CCR Title 8, CFR Parts 1910 and 1926, NEC) and shall include the following:

1. Lockout procedures shall be coordinated between the Contractor and Owner's designated representative.

2. All locks shall be individually keyed. Group or crew locks are not allowed.

3. All equipment or systems that have been locked out shall have a current accident prevention tag noting the reason for placing the tag, name of the individual placing the tag, how that person may be contacted, and the date the tag was placed.

4. No employee shall remove another employee's lock(s) or tag(s). Any exceptions shall be coordinated between the Contractor and the Owner's designated representative.

E. If equipment or systems cannot be locked out or blocked, suitable tagout procedures shall be implemented. Only the person whose signature is on the accident prevention tag may remove it. Any exceptions to this shall be coordinated between the Contractor and Owner's designated representative.

F. Upon completion of the work, energizing equipment is prohibited until all tags and locks have been removed. The person removing the last tag is responsible for re-installation of guards and for warning all affected personnel.

1.14 PUBLIC SAFETY AND CONVENIENCE

The Contractor shall conduct his work so as to ensure the least possible obstruction to traffic and inconvenience to the general public and the residents in the vicinity of the Work and to ensure the protection of persons and property. No road or street shall be closed to the public except with the permission of the Construction Manager and the written approval by the proper governmental authority. Fire hydrants on or adjacent to the Work shall be accessible to fire fighting equipment. Temporary provisions shall be made by the Contractor to ensure the continued use of sidewalks, private and public driveways and proper functioning of gutters, sewer inlets, drainage ditches and culverts, irrigation ditches and natural water courses. The Contractor shall provide public protection by installing and maintaining the appropriate barricades, fences, guardrails, overhead protection, or any other necessary form of protection. Pedestrian or vehicle barriers shall be used around all open pits, manholes, or excavation openings when left unattended.

In accordance with California Business and Professions Code Section 7058, no person or entity shall set up or remove roadway construction zones, lane closures, flagging, or traffic diversions on any roadway unless that person or entity holds a valid and current C31 specialty license from the California Contractors State License Board. (C31 - A construction zone traffic control contractor prepares or removes lane closures, flagging, or traffic diversions, utilizing portable devices such as cones, delineators, barricades, sign stands, flashing beacons, flashing arrow trailers, and changeable message signs, on roadways, including but not limited to public streets, highways, or any public conveyance.)

1.15 CRANE OPERATION

All Contractors shall only permit operators who have a valid certificate of competency (certificate) issued in accordance with CCR Title 8 Section 5006.1 by an Accredited Certifying Entity for the type of crane to be used, to operate mobile cranes regulated under Section 5006.1. Further, the same certification requirements as those identified in the CCR, for the type of crane to be used shall also apply to operators of cranes having a boom length of less than 25 feet or a maximum rated load capacity of less than 15,000 pounds.

1.16 ASBESTOS RELATED WORK

All work involving asbestos containing material must be performed in accordance with California Labor Code, Sections 6501.5 through 6510, inclusive, and California Administrative Code, Title 8, Section 5208 and all other pertinent laws, rules, regulations, codes, ordinances, decrees and orders.

1.17 PROVISIONS FOR HANDLING EMERGENCIES

A. It is possible that emergencies may arise during the progress of the Work, which may require special treatment or make advisable extra shifts of labor forces to continue the Work for twenty-four (24) hours per day. These emergencies may be caused by damage or possible damage to nearby existing structures or property by reason of the work under construction, or by storm, accidents, or leakage. The Contractor shall be prepared in case of such emergencies to make all necessary repairs and shall promptly execute such work when required.

B. Upon start of the Work, Contractor shall provide means for immediate emergency notification of Contractor’s designated representative and designated emergency alternates.

PART 2 MATERIALS

Not used.

PART 3 EXECUTION

Not used.

APPENDIX A

CONTRACTOR'S REPORT OF UNSAFE CONDITION/ACT FORM

CONTRACTOR INSTRUCTIONS:
Contractor employee observing hazardous condition or near-miss incident completes and gives to their Supervisor. Contractor representative reviews and gives to Owner's Project Manager.

HAZARDOUS CONDITION/NEAR-MISS INCIDENT: (completed by reporting employee)

Employee Name (*optional):* _____ Date of This Report: _____

Date Unsafe Condition or Event Witnessed: _____ Location of Unsafe Condition or Event: _____

Describe Unsafe Condition or Event: _____

Do You Have Suggestions to Remedy the Situation or Prevent Recurrence: _____

Type of Hazard: ❑ Imminent ❑ Serious ❑ General ❑ Regulatory

REVIEWED BY: _____ **SUBMITTED TO:** _____ **DATE:** _____
Contractor's Rep. ***Owner's Rep***

OWNER'S PROJECT MANAGER: A completed copy of this form is to be given to the Contractor representative and the original given to the Owner's Safety Officer for filing.

CONTRACTOR'S REPORT OF DAMAGE TO OWNER'S EQUIPMENT/PROPERTY FORM

1. Contractor (Name of Company): _____ Contact Number:_____

2. Name/Title of person completing this report: _____ Phone number:_____

3. Date of accident: _____Time: _____am/pm Day of the Week:_____

4. Whether Conditions: _____ Temperature: ____F

5. Roadway or Surface Conditions: ❑ Wet ❑ Dry ❑ Icy ❑ N/A
❑ Other:_____

6. Location where accident occurred:_____
(Include specific areas, equipment, processes, etc.)

7. Owner's Equipment Involved (Description and Serial Nos.):_____

8. Any Personal Injuries? ❑ Yes ❑ No
Estimated Value of damages:
Owner's Property:_____ Third party damages: _____

For vehicle accidents only:
Contractor's vehicle involved:_____
Year make body style
Vehicle License No.
Driver (Name): _____ Drivers' License No. _____
Driver's address: _____ Phone No. _____
Vehicle damages (describe): _____
_____
_____

Passengers (Names): _____

Other Vehicle(s) involved: _____
Year make body style
Driver (Name): _____ Drivers' License No. _____
Driver's address: _____ Phone No. _____
Insurance Company Name: _____
Vehicle damages (describe): _____
_____
_____

Passengers (Names): _____

9. Witness (es) to the Accident:
Name: _____ Name: _____
Address: _____ Address: _____
Phone No. _____ Phone No. _____

_____
Supervisor's Signature: Date this report completed:

REQUEST TO USE/STORE HAZARDOUS SUBSTANCES ON OWNER'S PROPERTY FORM

OWNER'S STAFF INSTRUCTIONS:

- Owner's Project Manager or designee provides this form to Contractors who plan to bring hazardous substances in quantities greater than 5-gallons or 10-lbs onto Owners properties, or whose work activities may expose Owner's employees to hazardous substances.
- Owner's Project Manager or designee reviews for completion and ensures a complete SDS has been attached.
- Owner's Project Manager or designee ensures the SDS is copied to the affected management personnel before the hazardous substance is opened or used on Owner's property.

CONTRACTOR INSTRUCTIONS:

Make a copy of this form and complete for each chemical/hazardous substance exceeding the Owner's threshold amounts that will be stored or used on Owner's property. Attach the respective SDS(s) to each completed form. An SDS *must* be provided for all hazardous substances exceeding the Owner's threshold amounts that will be used or stored on Owner's property.

PERSON SUBMITTING INFORMATION: _____ POSITION: _____

COMPANY NAME: _____
TELEPHONE NUMBER: _____ EMAIL: _____

CHEMICAL NAME: _____
QUANTITY TO BE BROUGHT ONTO OWNER PROPERTIES:
____ # Drums X ____ Drum Vol. (gal) = ____ Total Gallons

____ # Tanks X ____ Tank Vol. (gal) = ____ Total Gallons

OTHER: Total lbs or gallons = _____

CHEMICAL TO BE USED AND/OR STORED ON OWNER'S PROPERTY BY:
[ ] Prime Contractor [ ] Subcontractor [ ] Other: _____

WHAT WILL CHEMICAL BE USED FOR? _____

APPROXIMATELY HOW LONG WILL THE CHEMICAL BE USED/STORED ON OWNER'S PROPERTY? _____

[ ] NFPA or [ ] HMIS Rating
HEALTH ____ FLAMMABILITY ____ REACTIVITY ____ SPECIFIC HAZARD/PPE _____

WHERE WILL CHEMICAL BE STORED? _____

WILL CHEMICAL BE STORED USING SECONDARY CONTAINMENT? [ ] YES [ ] NO

CONTRACTOR'S INJURY/FATALITY INCIDENT REPORT FORM

1. Contractor (Name of Company): _____ Contact Number:_____

2. Name/Title of person completing this report:_____ Phone#_____

3. Date of accident: _____ Time: _____ am/pm: Day of the week:_____

4. Location where accident occurred:_____
(Include specific areas, equipment, _____
processes, etc.)

5. Injury type: __Lost time injury __Serious injury __Recordable Injury __Fatality

6. Name of the injured party: _____ Employment date of hire:_____

7. Occupation of injured party: _____ Male Female___

8. Job activities being performed when the accident occurred:_____
_____

---

9. Primary Cause of the Accident:_____

10. Secondary or other contributing factors such as:
❑ Defective/unsafe equipment ❑ Safeguards missing ❑ Environmental conditions
❑ Lack of training ❑ Not following safety rules ❑ Lightning
❑ Not wearing protective equip. ❑ Working at unsafe speed ❑ Ventilation
❑ Horse-play ❑ Improper use of tools ❑ Poor housekeeping
❑ Lack of safety rules ❑ Lack of proper warning ❑ Slippery/uneven surfaces
❑ Physical limitation ❑ Improper storage
❑ Other:_____

11. Type of injury and body part(s) affected:_____

12. __On-site first aid __Off-site medical care __Required an ambulance or other emergency medical responder

13. Was the incident a fatality or an injury that required hospitalization for more than 24 hours for more than observation? __Yes __No

14. Was CalOSHA notified: __Yes __No Date/Time notification was made:_____

15. Contractor's Workers' Compensation Insurance Notified? __Yes __No
Date/Time notification made:_____

16. Agencies who were called and/or responded to the accident:
❑ Fire ❑ Police ❑ Insurance Representative ❑ CalOSHA Other:_____

17. Was the accident investigated? __Yes __No By whom?_____ Report Available?_____

18. Supervisor's Correction Action taken:_____
_____
_____

Supervisor's Signature:_____ Date this report completed:_____

OWNER'S EMERGENCY CONTACT INFORMATION FORM

OWNER'S EMERGENCY CONTACTS (To be filled out by the Owner's Project Manager for each project.)

PLEASE NOTE: It is the Contractor's responsibility to notify any appropriate regulatory authorities or outside emergency responders. This list is only meant to identify the Owner's staff that must be notified under the following events, in addition to any other appropriate emergency notifications.

In Case Of…	Immediately Contact:	If Unavailable, Contact:	How To Report:
Employee Injury			1. Phone or In Person ***AND*** 2. Complete Contractor's Injury/Fatality Incident Report
Damage to Owner's Property			1. Phone or In Person ***AND*** 2. Contractor's Report of Damage to Owner's Equipment or Property
Emergency Requiring Outside Assistance (*e.g. fire, violence, chemical spill, etc.)*			1. Phone or In Person
Harassment			1. Phone or In Person
Need Process Shut Down/Return to Service (*e.g. lockout/tagout)*			1. Phone or In Person ***AND*** 2. Fill out Plant/Process Shutdown Request-Return to Service Forms
Need to Bring Hazardous Substances Onto OWNER'S Property in Amounts Exceeding the Owner's Threshold Amounts Listed in Request to Use/Store Hazardous Substances on Owner's Property			1. Phone or In Person ***AND*** 2. Complete Request to Use/Store Hazardous Substances on Owner's Property Form

❑ **GUIDE TO OWNER'S EMERGENCY ALARM SYSTEM**

- **Evacuation: In response to Plant Emergency Alarm, meet behind Administration building lunch room for head count and further instructions. *(Emergency evacuation procedures to be covered in orientation training required for all contractor and subcontractor employees.) All other alarms in use at the OWNER are for process control. If you have questions about an alarm, please contact the Engineer or Owner's inspector.***

❑ **FACILITY SDS LOCATION:**

- **Operations building, conference room**

❑ **LOCATION OF OWNER'S SAFETY PROGRAMS:**

- **Administration building offices**
  - ✓ Lockout/Tagout Program
  - ✓ Confined Space Program
  - ✓ Illness and Injury Prevention Program and Code of Safe Practices
  - ✓ Bloodborne Pathogens Program
  - ✓ Emergency Action Plan
  - ✓ Fire Prevention Plan
  - ✓ Hazard Communication Program
  - ✓ Respiratory Protection Program

BIOLOGICAL HAZARDS IN WASTEWATER FACT SHEET

Wastewater contains bacteria, fungi, parasites, and viruses that can cause intestinal, lung, and other infections. Proper equipment, work practices, and personal protective equipment (PPE) can help protect you from these agents.

Some Biological Hazards That May Be in Wastewater

Bacteria may cause diarrhea, fever, cramps, and sometimes vomiting, headache, weakness, or loss of appetite.

Fungi

- Aspergillus can lead to allergic symptoms (such as runny nose) and sometimes can lead to lung infection or make asthma worse. If you have other health problems, you may be more likely to get sick from aspergillus.

Parasites

- Cryptosporidium and giardia lamblia may cause diarrhea, nausea and stomach cramps.
- Roundworm (ascariasis). Most people have no symptoms. With a lot of roundworms, you may cough and have trouble breathing or you may have pain in your belly and blocked intestines.

Viruses

- Hepatitis A causes liver disease. You may feel tired, have stomach cramps, nausea, jaundice (yellow skin) or diarrhea or not be hungry. The Center for Disease Control says sewage workers are not at more risk of hepatitis A infection than other workers.

Bloodborne viruses are a hazard mainly to workers in health care facilities. Hepatitis B and HIV are bloodborne.

- Hepatitis B causes liver disease. You may feel tired, have jaundice (yellow skin), have stomach cramps, nausea, or not be hungry. The disease has not been linked to exposure to sewage in the U.S.
- Human immunodeficiency virus (HIV) causes AIDS. There are no known cases of wastewater workers getting HIV from their jobs in the U.S.

Protecting the Worker

For work around wastewater, engineering controls and work practices are the best ways to protect workers from exposures to disease. When engineering controls are not possible, use personal protective equipment (PPE).

OSHA says the employer should give the worker:

- Training and education about the hazards of wastewater
- A place onsite with clean water for washing your hands
- A place to wash and clean up after work
- The right PPE, such as gloves, goggles, a face shield, water-resistant suit, or respirator – depending on the job
- Clean areas set aside for eating and smoking
- Cleaning facilities or services for clothing and equipment. (If clothing is badly soiled, change out of it. Keep equipment clean to limit your exposures to the disease-causing agents.)

What you can do:

- Most important: **Wash your hands well with clean water and soap before you eat or smoke and after work.**
- **Do not touch your nose, mouth, eyes, or ears with your hands, unless you have just washed.**
- Keep your fingernails short; use a stiff soapy brush to clean under your nails.
- Wear waterproof gloves when you handle wastewater, sludge, or grit.
- Always wear gloves when your hands are chapped or burned or you have a rash or a cut.
- Do not keep your soiled work clothes with your other clothes.
- Report any injury or illness you think you got from work right away.
- DO NOT wear shorts or open-toed shoes when working around sewage.
- **If you do get sick, be sure to tell your doctor you've worked in a sewage or wastewater treatment plant.** That information will help the doctor.

Vaccinations

You should have current shots for tetanus and diphtheria. If you want to know about shots to prevent hepatitis A, ask a nurse or doctor.

For more information, call the Center to Protect Workers' Rights (CPWR) (202-962-8490 or **www.cpwr.com**), the National Center for Infectious Diseases (**www.cdc.gov/ncidod**) , National Institute for Occupational Safety and Health (NIOSH) (1-800-35-NIOSH or **www.cdc.gov/niosh**), or OSHA (1-800-321- OSHA or **www.osha.gov**)

END OF SECTION

SECTION 01340

REQUESTS FOR INFORMATION AND CLARIFICATIONS

PART 1 GENERAL

1.1 DESCRIPTION

A. Should the Contractor discover conflicts, omissions, or errors in the Contract Documents, or have any questions concerning interpretation or clarification of the Contract Documents, or if it appears to the contractor that work to be done or any matter relative thereto are not sufficiently detailed or explained in the Contract Documents, then, before proceeding with the work affected, the Contractor shall immediately notify the Engineer in writing and request interpretation, clarification, or additional detailed instructions concerning the work. The Contractor shall ask for any clarification or request for information immediately upon discovery, but no less than fifteen (15) days prior to the start date of the activities related to the clarification, based on the latest updated and accepted construction schedule. Contractor shall be responsible for its costs to implement and administer RFI's throughout the Contract duration. Regardless of the number of RFI's submitted, Contractor will not be entitled to additional compensation.

B. A RFI is not to be used for request for materials/equipment substitutions or value engineering/cost reduction incentive proposals.

1.2 RFI PROCEDURES

A. Contractor review and submittal:

1. Contractor's review: Before submitting each RFI, the Contractor shall carefully review the following for relevant information:

   a. All field measurements, quantities, dimensions, specified performance criteria, installation requirements, materials, catalog numbers, and similar information with respect thereto.

   b. All materials with respect to intended use, fabrication, shipping, handling, storage, assembly, and installation pertaining to the performance of the Work.

   c. All information relative to means, methods, techniques, sequences, and procedures of construction and safety precautions and programs incident thereto.

d. The coordination of each Shop Drawing or Sample with other Shop Drawings and Samples and with the requirements of the Work and the Contract Documents.

e. The Contract Documents.

f. The Project correspondence and documentation.

2. Submittal requests

a. The Contractor shall submit all requests for clarification and/or additional information in writing through the Engineer to the Engineer using a request for information (RFI) form. Contractor shall provide a detailed written statement that indicates the specific Drawings or Specifications in need of clarification and the nature of the clarification requested.

b. Contractor shall furnish six (6) copies of each RFI. Each RFI shall be dated and bear a signed certification that Contractor has performed the review defined above. No consideration for review by Engineer of any RFI will be made for any item which has not been certified by the Contractor. All non-certified RFI's will be returned to Contractor without action taken by Engineer, and any delays caused thereby shall be the total responsibility of Contractor.

c. Each RFI shall be limited to one subject.

B. RFI numbering system: The initial RFI shall be numbered as RFI 001 and all subsequent questions shall be numbered consecutively with the date of issue, except for re-issuance of a respective RFI in which the subscript A, B, C, etc., will be added until the RFI is resolved. If Contractor believes the RFI reviewer's response is incomplete, Contractor shall issue another RFI (with the same RFI number with the letter "A" indicating if it is a follow-up RFI) to Engineer clarifying original RFI. Additionally, Engineer may return RFI requesting additional information should original RFI be inadequate in describing condition.

C. Owner's RFI review and response time:

1. Except as may otherwise be provided herein, the Engineer will return one copy of each RFI form to Contractor, with its comments noted thereon or on a separate comment sheet, within a reasonable amount of time, but no more than fifteen (15) calendar days following their receipt from Contractor, or if it is necessary to extend this period, the Engineer shall notify the Contractor in writing as to when a decision will be provided.

2. Engineer's review will be only to provide clarification and interpretation of the Contract Documents. Engineer's review shall not relieve Contractor for the responsibility for compliance with the Contract Documents.

3. Engineer's review will not extend to means, methods, techniques, sequences, or procedures of construction (except where a particular means, method, technique, sequence, or procedure of construction is specifically and expressly called for by the Contract Documents) or to safety precautions or programs incident thereto.

4. The Engineer may furnish additional detailed written instructions to further explain the work, and such instructions shall be a part of the contract documents. Clarifications will be issued using the above RFI system. Should additional detailed instructions in the opinion of the Contractor constitute work in excess of the scope of the contract, the Contractor shall submit notification immediately and written notification thereof to the Engineer no more than seven (7) days following receipt of such instruction, and in any event prior to the commencement of work thereon. If the Engineer considers it justified, the instructions of the Engineer will be revised or a proposed change order will be issued for the Owner's consideration. The Contractor shall have no claim for additional compensation or extension of the schedule because of any such additional instructions unless the Contractor provides the Engineer written notice thereof within the time frame specified above. In addition, the Contractor shall within fifteen (15) days from the date of notification provide detailed justification and analysis as well as complete pricing and schedule CPM fragmentary network to support any request for time extension.

5. Should the Contractor proceed with the work affected before receipt of a response from the Engineer, any portion of the work which is not done in accordance with the Owner's interpretation, clarifications, instructions, or decisions subject to removal or replacement and the Contractor shall be responsible for all losses.

6. RFI's will not be recognized or accepted, if in the opinion of the Engineer or Engineer, that one of the following conditions exists:

    a. The Contractor submits an RFI as a submittal.

    b. The Contractor submits the RFI under the pretense of a contract documents discrepancy or omission without thoroughly reviewing the documents. In this case, the Contractor shall be responsible for both the Engineer's and Engineer's administrative costs to process the RFI. Such costs will be deducted from Contractor's progress payments.

    c. The Contractor submits the RFI in a manner that suggests that specific portions of the contract documents are assumed to be excluded, or be taken as an isolated portion of the contract documents in part rather than whole.

    d. The Contractor submits an RFI in an untimely manner without proper coordination and scheduling of work or related trades.

7. The Engineer's review shall not relieve Contractor from the entire responsibility for any variation from the requirements of the Contract Documents unless Contractor has in writing called attention to each such variation at the time of each RFI submittal and Engineer has given written approval of each such variation by specific written notation thereof incorporated in the RFI review; nor will any review by Engineer relieve Contractor from responsibility for compliance with the requirements for careful review above.

PART 2 MATERIALS

Not used.

PART 3 EXECUTION

Not used

END OF SECTION

SECTION 01610

SEISMIC DESIGN CRITERIA

PART 1 GENERAL

1.1 SUMMARY

Section includes: Seismic design criteria for the following:

A. Contractor or vendor provided design for support systems and anchorage of mechanical equipment, electrical equipment and distributed systems (i.e. piping, conduit, ducting, other), shall be, in accordance with section 1.3, and as called for below:

1. Where the mechanical or electrical equipment has a weight of four hundred pounds (400 lbs) or more.

2. Where the mechanical or electrical equipment has a weight of less than four hundred pounds (400 lbs) and a center of mass located four feet (4'-0") or more above the adjacent floor level.

3. Where mechanical or electrical equipment has a weight of twenty pounds (20 lbs) or less or, in the case of a distributed system that has a weight of five pounds per feet (5 lbs/ft) or less, seismic anchorage need not be considered. Where multiple distributed systems are supported off of the same system their combined weight must be used in determining if design is required for the support system.

4. Typical Details may have been provided for supporting mechanical equipment, electrical equipment and distributed systems (i.e. piping, conduit, ducting, other) as well as for stairs, ladders, and other miscellaneous items in the construction documents. These Typical Details are to be used for a minimum standard for style, size, and materials and shall be used as a guide for the contractor in designing the specific item or system utilized on the project Design for these systems shall be provided in the submittal. The design shall include details and calculations stamped and signed by a Civil or Structural engineer registered in the State of California.

B. Contractor or vender to provide seismic design of tanks and anchorage of tanks.

C. Other Contractor or vender provided structures or items as specified or indicated on the Drawings.

D. In addition to the requirements of A-C above, provide seismic design for support systems, internal connections and packaged components as called for below:

1. Seismic design of Premanufactured Modular Mechanical and Electrical Systems (i.e. Electrical Switch Boards, Motor Control Centers, Standby Generators and Skid Mounter Systems with an Enclosure), where the Premanufactured Mechanical and Electrical Modules are six feet (6'-0") or taller and that contain or support mechanical and electrical components shall be designed in accordance with ASCE 7-16 Chapter 15 'Nonbuilding Structures Similar to Buildings'. Nonstructural components contained or supported within the modular systems shall be designed in accordance with ASCE 7-16 Chapter 13. Provide design that includes details and calculations stamped and signed by a Civil or Structural engineer registered in the State of California.

2. If Premanufactured Modular Mechanical and Electrical Systems (i.e. Electrical Switch Boards, Motor Control Centers, Standby Generators and Skid Mounter Systems with an Enclosure) is 'Prequalified' in accordance with ASCE 7-16 Chapter 13 section 13.2.2, it is exempt from the requirements of Section 4.a above. Manufacturer shall provide seismic qualification based on a nationally recognized testing standard procedure, such as ICC-ES AC 156. Seismic qualification by experience data based on nationally recognized procedures is also acceptable. Seismic pre-approval from OSHPD will also satisfy this requirement. Certification must be provided for either listed option. Certification must show seismic capacities are equal to or exceed the seismic demands that are project specific.

3. Section 1.1.D shall not apply to Skid-Mounted Equipment without an enclosure (i.e. pumps), and single large components, such as air handlers, cooling towers, chillers and boilers.

E. In accordance with the Building Code, internal elements in a water bearing structures, such as equipment and accessories that are attached to the structure, shall be designed for the lateral loads due to sloshing liquid in addition to the inertial forces.

F. All design calculations shall be per the 2022 CBC and the 2022 CBC Chapter 16 load combinations.

1.2 RELATED WORK SPECIFIED ELSEWHERE

Section 01300: Submittals.

1.3 REFERENCES

A. International Code Council (ICC).

B. 2022 California Building Code (CBC).

C. American Society of Civil Engineers

1. 7-16 Minimum Design Loads for Buildings and Other Structures (ASCE 7)

D. American Concrete Institute

1. Anchoring to Concrete of 318-19 Building Code Requirements for Structural Concrete (ACI 318-19.)

a. Chapter 17 -Anchoring to Concrete

E. California Office of Statewide Health Planning and Development's (OSHPD) Seismic Preapproval.

1.4 SYSTEM DESCRIPTION

Design Requirements: Design in accordance with the requirements of the 2022 CBC and ASCE 7.

A. Risk Category, III

B. Site Class, D

C. Spectral Acceleration Parameter, S_S: 0.409g

D. Spectral Acceleration Parameter, S_1:0.201g

E. Design Spectral Acceleration at short period, S_{DS}: 0.3556g

F. Design Spectral Acceleration at 1-Second Period, S_{D1}: 0.201g.

G. Component Amplification Factor, a_P: In accordance with ASCE 7-16, Tables 13.5-1and 13.6-1.

H. Component Response Modification Factor, R_P: In accordance with ASCE 7-16, Tables 13.5-1 and 13.6-1.

I. Overstrength Coefficients, Ωo: In accordance with ASCE 7-16, Tables 13.5-1and 13.6-1

J. Component Importance Factor, I_P: In accordance with ASCE 7-16, Section13.1.3 but not less than 1.25

K. Component Response Modification Factor, R: In accordance with ASCE 7-16, Tables 15.4-1 and 15.4-2

L. Overstrength Coefficients, Ωo: In accordance with ASCE 7-16, Tables 15.4-1and 15.4-2

M. Deflection Amplification Factor, Cd: In accordance with ASCE 7-16, Tables15.4-1 and 15.4-2

N. Importance Factor, Ie: In accordance with ASCE 7-16, Section 15.4.1.1 but no less than 1.25.

O. Do not use friction to resist sliding due to seismic forces.

P. Do not use more than 60 percent of the weight of the mechanical and electrical equipment for designing anchors for resisting overturning due to seismic forces.

Q. Do not use more than 60 percent of the weight of the tank for resisting overturning due to seismic forces.

R. Anchor design capacity is to be independent of reinforcing steel in the concrete providing ductility.

S. Use anchor bolts, bolts, or welded studs for anchors for resisting seismic forces. Anchor bolts used to resist seismic forces shall have a standard hex bolt head. Do not use anchor bolts fabricated from rod stock with an L or J shape.

1. Do not use concrete anchors, flush shells, adhesive anchors, powder actuated fasteners, or other types of anchors unless indicated on the Drawings or accepted in writing by the Engineer.

2. Seismic forces must be resisted by direct bearing on the fasteners used to resist seismic forces. Do not use connections which use friction to resist seismic forces.

T. Where adhesive anchors are allowed, personnel used for installation shall be certified by an applicable certification program per ACI 318-19 section 26.7.1(l).

1.5 SUBMITTALS

A. Shop Drawings and Calculations: Submit shop drawings and seismic calculations in accordance with Section 01300. Calculations to be attached to the approved equipment/piping/tank submittal (to coordinate appropriate dimensions, weights and pertinent information).

B. Calculations shall be signed and stamped by a Civil or Structural Professional Engineer licensed to practice in the state where the project is located. All calculations shall be provided in English units.

PART 2 MATERIALS

Not used.

PART 3 EXECUTION

Not used.

END OF SECTION

SECTION 01615

WIND DESIGN CRITERIA

PART 1 GENERAL

1.1 SUMMARY

Section includes: Wind design criteria for the following:

A. Section Includes: Wind design criteria for the following:

1. Design of equipment, light poles, flag poles, antenna poles, freestanding walls, solid signs, tanks, facilities, buildings and all other structures as indicated in ASCE 7.
2. Wind design shall be considered for all cases listed, unless equipment is 'housed' in an enclosed structure or when it can be demonstrated that Wind design does not govern.
3. The minimum Wind loading for other elements that are not defined in ASCE 7 shall be sixteen pounds per square foot (16 lbs/ft2) multiplied by its area.

B. Design of anchorage for the Item A, listed above.

C. Other structures or items as specified or indicated on the Contract Drawings and as required by the latest California Building Code.

1.2 RELATED WORK SPECIFIED ELSEWHERE

Section 01300: Submittals

1.3 REFERENCES

A. International Code Council (ICC).

B. 2022 California Building Code (CBC).

C. American Society of Civil Engineers.

1. ASCE 7-16 Minimum Design Loads for Buildings and Other Structures (ASCE 7).

1.4 SYSTEM DESCRIPTION

Design Requirements: Design in accordance with the requirements of the 2022 CBC and ASCE 7.

A. Risk Category: III

B. Basic Wind Speed (3 second gust):

1. Ultimate design wind speed, V_{ULT} = 100 mph

2. Nominal design wind speed, V_{ASD} = 85 mph

C. Exposure Category: C

D. Topographic Factor, K_{tz} = shall be in accordance with ASCE 7-16 Standard.

E. Use anchor bolts, bolts, or welded studs for anchors for resisting wind forces. Anchor bolts used to resist wind forces shall have a standard hex bolt head. Do not use anchor bolts fabricated from rod stock with an L or J shape.

1. Do not use concrete anchors, flush shells, adhesive anchors, powder actuated fasteners, or other types of anchors unless indicated on the Drawings or accepted in writing by the Engineer.

2. Wind forces must be resisted by direct bearing on the anchors used to resist wind forces. Do not use connections which use friction to resist wind forces.

F. Where adhesive anchors are allowed, personnel used for installation shall be certified by an applicable certification program per ACI 318-19 section 26.7.1.(l).

G. Anchor design capacity is to be independent of reinforcing steel in the concrete providing ductility.

1.5 SUBMITTALS

A. Shop Drawings and Calculations: Submit complete shop drawings and wind calculations in accordance with Section 01300.

B. Calculations shall be signed and stamped by a Civil or Structural Professional Engineer licensed to practice in the state where the project is located. All calculations shall be done in English units.

PART 2 MATERIALS

Not used.

PART 3 EXECUTION

Not used.

END OF SECTION

SECTION 01620

QUALITY CONTROL AND INSPECTION

PART 1 GENERAL

1.1 CONTRACTOR'S QUALITY CONTROL

A. General: The Contractor is to ensure that products, services, workmanship and Site conditions comply with the requirements of the Contract Documents by coordinating, supervising, testing and inspecting its Work. The Contractor shall utilize only suitably qualified, skilled and trained personnel experienced in the tasks required to complete the Work in accordance with the quality requirements of the Contract Documents. Should there be no quality basis specifically prescribed for any portion of the Work, the quality and testing procedures shall be in accordance with the best-accepted practices of the construction industry for the locale of the Project, for projects of this type, or standards set by engineering or technical societies (e.g. ASTM or ASHRAE), whichever is more stringent.

B. Quality of Work: The Contractor's quality of Work shall include, but not be limited to, the following requirements:

1. Quality of Products: Unless otherwise indicated or specified, all products shall be new, free of defects, and fit for the intended use. Materials manufactured over one year, prior to shipment to the Project site, shall not be allowed on the Project (as identified by manufacturer's serial numbers/labels/stamps).

2. Quality of installation: All Work shall be produced plumb, level, square and true, or true to indicated angle, and with proper alignment and relationship between the various elements, as shown on or required by Contract Documents.

3. Protection of Completed Work: Take all measures necessary to preserve completed Work free from damage, deterioration, soiling, and staining, until acceptance by Owner.

4. Standards and Code Compliance and Manufacturer's Instructions and Recommendations: Unless more stringent requirements are indicated or specified, comply with manufacturer's instructions and recommendations, reference standards and building code research report requirements in preparing, fabricating, erecting, installing, applying, connecting, and finishing Work.

5. Deviations from Standards and Code Compliance and Manufacturer's instructions and Recommendations: Secure Owner's advanced written consent. Document and explain all deviations from reference standards and building code research report

requirements and manufacturer's product installation instructions and recommendations, including acknowledgement by the manufacturer that such deviations are acceptable and appropriate for the Project.

6. Verification of Quality: Work shall be subject to verification of quality by Owner in accordance with provisions of the Contract Documents.

C. Defective Work: Defective Work shall be modified, replaced, repaired or redone by the Contractor at no change in Contract Sum or Contract Time. Acceptance of Defective Work, without specific written acknowledgement and approval of Owner, shall not relieve the Contractor of the obligation to correct such Work. Should Owner determine that it is not feasible or in Owner's interest to require Defective Work to be repaired or replaced, an equitable reduction in Contract Sum shall be made by agreement between Owner and Contractor. If equitable amount cannot be agreed upon, a Construction Change Directive will be issued and the amount in dispute resolved in accordance with the Contract Documents. Owner and Owner's consultants disclaim any and all responsibility for Work produced not in conformance with the Drawings and Specifications. Contractor shall have full responsibility for all consequences resulting from Defective Work, including without limitation all delays, disruptions, extra inspection and correction costs by Contractor and Owner and re-Work, and extra time and costs of all types. Contractor waives excuses for defective work relating to Owner's prior review of Submittals and/or prior failure to notice Defective Work in place on inspection.

PART 2 MATERIALS

Not used.

PART 3 EXECUTION

3.1 INSPECTION AND TESTING

A. General:

1. Where the Contract Documents require work to be field tested or approved, it shall be tested in the presence of the Construction Manager or its authorized representative. The Construction Manager shall have the right to witness all on-site tests performed by the Contractor and any shop tests. The results of any tests performed by the Contractor shall be made available for the information of the Construction Manager. Inspections, tests or favorable reviews by the Construction Manager or others shall not relieve the Contractor from its obligation to perform the work in accordance with the requirements of the Contract Documents or for its sole responsibility for the quality of workmanship and materials.

2. Except as specifically required under the technical specifications for testing and inspection, all tests for materials furnished by the Contractor will be done in accordance with commonly recognized standards of national organizations. Where

tests are to be performed by the Construction Manager or by an independent laboratory or agency, the Contractor shall furnish such samples of all materials as required by the Construction Manager without charge. The sample or samples of materials to be tested shall be selected by such laboratory or agency, or the Construction Manager, and not by the Contractor. No material for which the Contract Documents require the submittal and approval of tests, certificates of compliance or other documentation shall be incorporated in the Work until such submittal has been made and approved. The Contractor shall provide safe access, including plants where materials or equipment are manufactured or fabricated, for the Construction Manager and inspectors to adequately inspect the quality of work and the conformance with the Contract Documents. The Contractor shall furnish the Construction Manager the necessary labor and facilities for such things as excavation in the compacted fill to the depths required to take samples. The Contractor shall provide adequate lighting, ventilation, ladders and other protective facilities as may be necessary for the safe performance of inspections.

3. Upon completion of the Work the Construction Manager will conduct a final inspection as provided in Section 00700 – General Conditions. Records shall be available at all reasonable hours for inspection by other local or State agencies to ascertain compliance with laws and regulations.

4. Neither the employment of independent testing and inspection agency nor observations or tests by Owner and Owner's consultants shall in any manner relieve the Contractor of obligation to perform Work in full conformance to all requirements of the Contract Documents. The Owner reserves the right to reject all Work not in conformance to the requirements of the Contract Documents, or otherwise Defective.

B. Notice:

1. The Contractor shall notify the Construction Manager in writing at least twenty-four (24) hours before any field testing or special inspections are required to be performed by the Construction Manager or independent laboratory furnished by the Owner. The Contractor shall notify the Construction Manager at least two hours before any inspection is required to be performed or to witness the Contractor's on-site field testing.

2. Whenever the Contractor varies the period during which work is carried on each day, the Contractor shall give due notice to the Construction Manager so that proper inspection may be provided. Any work done in the absence of the Construction Manager shall be considered to be rejected. It will be the responsibility of the Contractor to demonstrate to the satisfaction the Construction Manager that the work meets all conditions of the specification and if such conditions are not met to remove the work.

3. The Contractor shall give the Construction Manager written notification at least thirty (30) days prior to the shipment of materials and equipment to be tested and/or inspected at the point of origin. Satisfactory tests and inspections at the point of origin shall not be construed as a final acceptance of the materials and equipment nor shall such tests and inspections preclude retesting or reinspection at the site of the Work.

C. Costs of Testing:

1. The Contractor shall be responsible for, and shall pay for, all quality control and off-site tests of materials required including all source and mix design tests for the approval of soil and concrete materials. The Owner will perform the soils and concrete confirmation tests detailed in the Technical Specifications during the performance of the Work. Owner will retain and pay a qualified testing agency to perform soil compaction testing and work identified as requiring special inspections and testing as defined by CBC section 1701. All other testing required by the technical specifications shall be the responsibility of the Contractor.

2. The Contractor shall be responsible for, and shall pay for, all source quality control and all on-site tests of materials required, except those tests specifically noted to be performed and paid for by the Owner.

3. The Construction Manager shall have the authority to require additional tests or inspections due to the manner in which the Contractor executes its work. Examples of such additional tests and inspections include; tests of materials substituted for previously accepted materials, or substituted for specified materials, or retests made necessary by failure of material to comply with the requirements of the Specifications. Where such tests and inspections are required by Contract to be performed by the Owner, the Owner will pay for the additional tests and inspections but will issue an unilateral Change Order to deduct these costs from the Contract price.

D. Work Covered Prior to Inspection and/or Testing: Work requiring inspection and/or testing shall not be concealed or buried prior to the acceptance of such inspection or testing. Work covered without the favorable review or consent of the Construction Manager shall, if required by the Construction Manager, be uncovered for inspection and/or testing at the Contractor's expense.

E. Work Covered With Prior Inspection and/or Testing: If the Construction Manager considers it necessary or advisable that covered work which was favorably inspected and tested be uncovered for reinspection and/or retesting, the Contractor, at the Construction Manager's request, will uncover, expose or otherwise make available for observation, inspection or testing as the Construction Manager may require, that portion of the work in question, furnishing all necessary labor, materials, tools, and equipment. If it is found that such work is defective, the Contractor will bear all expenses of such uncovering, exposure, observation, inspection and testing and of satisfactory reconstruction. If, however, such work is not found to be defective the Contractor will be allowed an increase in the Contract price or an extension of the Contract time, or both, directly attributable to such uncovering, exposure, observation, testing and reconstruction, and a Change Order shall be issued for such additional work.

F. Coordination of County, City Building and Other Inspections: The Contractor is completely responsible for scheduling all County, City and any other agency inspections in accordance with the County, City and agency requirements. The Contractor shall notify the Construction Manager of all building and other work component inspection notices and

schedules. Failure of the Contractor to properly coordinate and schedule these inspections shall not be cause for time extensions.

G. Special Tests and Inspections: As provided for in the Contract Documents, laws and regulations, specialized tests and inspections shall be performed by special inspectors certified by the International Code Council (ICC). Unless otherwise stated in the Contract Documents, each of these tests will be performed and paid for by the Owner.

H. Inspections and Tests by Serving Utilities: Unless otherwise indicated in the Contract Documents, the Contractor shall cause, schedule and conduct inspections and tests by serving Utilities required for the Work under this Contract.

I. Inspections and Tests by Serving Manufacturers: Unless otherwise indicated in the Contract Documents, the Contractor shall cause all required tests and inspections to be conducted by materials, equipment or systems manufacturers. Additionally, all tests and inspections required by materials, equipment or systems manufacturers as conditions of warranty or certification of Work shall be made, the cost of which shall be included in the Contractor's bid.

3.2 TEST WATER

A. The Owner will furnish non-potable water for testing to the Contractor, free of charge, as is available from the Owner's water system. The conveyance of water shall be the responsibility of the Contractor and shall be at the Contractor's expense.

B. The Contractor shall submit a written request of water needs for testing including a description, volume, location and duration of use to the Construction Manager for approval. The Construction Manager will designate the type of water, locations where connections may be made and the backflow protection, if required. The Contractor is responsible for providing, installing and testing the backflow prevention device at the Contractor's expense. The Construction Manager may also require a meter on the connection depending on the volume of water requested.

C. There may be short periods of time when water is not available from the Owner's system.

END OF SECTION

SECTION 01640

PRODUCT HANDLING

PART 1 GENERAL

1.1 DESCRIPTION

Work Included: Protect products scheduled for use in the work by means including, but not necessarily limited to, those described in this Section.

1.2 RELATED WORK SPECIFIED ELSEWHERE

Documents affecting work of this Section include, but are not necessarily limited to:

A. Section 00700: General Conditions

B. Section 00800: Supplementary Conditions

C. Section 01010: General Construction Information and Requirements

Additional procedures also may be prescribed in other sections of these Specifications, including specific handling instructions recommended in the Manufacturer’s literature.

1.3 QUALITY ASSURANCE

Include within the Contractor's quality assurance program such procedures as are required to assure full protection of work and materials.

1.4 MANUFACTURERS' RECOMMENDATIONS

Except as otherwise approved by the Engineer, determine and comply with manufacturer’s recommendations on product handling, storage, and protection. Rotating equipment storage shall include recommended manual rotation frequency with a log prepared by the Contractor to demonstrate specification compliance. The Contractor shall contact the Engineer prior to performing the scheduled rotation. An Inspector may accompany the Contractor’s workmen during the required rotation.

1.5 PACKAGING AND DELIVERY

A. Deliver products to the job site in manufacturer's packaging material with seals unbroken and labels intact until time of use. Promptly remove damaged material and unsuitable items from the job site, and promptly replace with material meeting the specified requirements, at no additional cost to the Owner.

B. The Engineer may reject as non-complying such material and products that do not bear identification satisfactory to the Engineer as to manufacturer, grade, quality, and other pertinent information.

C. Copies of all equipment delivery tags shall be provided to the Engineer on a daily basis with delivery tag indicating equipment number, item description, model number, and serial number.

D. Packing and Marking:

1. All equipment shall be adequately and effectively protected against damage from moisture, dust, handling or other cause during transport from manufacturer's or supplier's premises to site.

2. Each item or package shall be clearly marked with a fitting or distinguishing mark which shall be shown on the packing lists. Copies of packing lists shall be delivered to the Engineer.

3. Stiffeners shall be used where necessary to maintain shapes and to give rigidity. Parts of equipment shall be delivered in assembled or sub-assembled units where possible.

E. Identification of Equipment: Each item of equipment shall have firmly affixed to it a label or tag with its equipment number or other discrete identifying mark.

F. Delivery of Equipment: The Owner's personnel will not accept materials or equipment deliveries for the Contractor.

1.6 PROTECTION

A. Protect finished surfaces, including jambs and soffits of openings used as passageways, through which equipment and materials are handled.

B. Provide protection for finished floor surfaces in traffic areas prior to allowing equipment or materials to be moved over such surfaces.

C. Maintain finished surfaces clean, unmarred, and suitably protected until accepted by the Owner.

D. Protect materials and equipment from the effects of weather, sunlight, extreme temperatures, etc., when exposure of the materials or equipment to the elements would cause degradation of, or damage to, the material, equipment or coating system. Progress payments for materials and equipment stored on-site will only be made when the materials or equipment are suitably stored.

E. Storage of Equipment: During the interval between the delivery of equipment to the site and installation, all equipment shall be safely stored in a manner acceptable to the Engineer. Equipment shall be stored in an enclosed space affording protection from vandalism, weather, dust and mechanical damage and providing favorable temperature, humidity and ventilation conditions to ensure against equipment deterioration. Rotating equipment shall be turned or exercised as recommended by the Manufacturer.

F. Protection of Equipment after Installation: After installation, all equipment shall be protected as specified by the manufacture. During concrete operations, including finishing, all equipment that may be affected by cement dust must be completely covered. During painting operations, all grease fittings and similar openings shall be covered to prevent the entry of paint. Electrical switchgear, unit substation and motor load centers shall not be installed until after all concrete work and sandblasting in those areas have been completed and accepted.

G. Exercise installed equipment and provide maintenance per manufacturer's recommendations until the project is accepted by the Owner.

1.7 REPAIRS AND REPLACEMENTS

A. In event of damage, promptly make replacements and repairs to the approval of the Engineer and at no additional cost to the Owner.

B. Additional time required to secure replacements and to make repairs will not be considered by the Engineer to justify an extension in the Contract Time of Completion.

PART 2 MATERIALS

Not used.

PART 3 EXECUTION

Not used.

END OF SECTION

SECTION 01656

DISINFECTION OF WATER LINES

PART 1 GENERAL

1.1 DESCRIPTION

The work of this section consists of the disinfection of all portions of the new utility water (does not include reclaimed water) system by the Contractor, including valves and stops and any portion of the existing connecting system that might have become contaminated during construction activities. Disinfection of water lines shall be done in accordance with AWWA C651 and this section.

1.2 SUBMITTALS

A. Submit plan for conveying water and protecting the existing utility water system used to supply disinfection water.

B. Submit plan for disposal of chlorinated water.

C. Submit test plan indicating fill location, bleed location(s), test locations(s) and other pertinent information.

PART 2 MATERIALS

2.1 CALCIUM HYPOCHLORITE

A. HTH, by Olin Chemicals, Olin Corporation, 120 Long Ridge Road, Stamford, CN 06904, or similar commercial product having approximately 70 percent available chlorine.

B. Mixture: A 5-percent solution shall be made by mixing 5 percent of powder with 95 percent water, by weight, first into a paste, then thinning to slurry by the addition of water.

2.2 SODIUM HYPOCHLORITE

Liquid sodium hypochlorite with a 12% minimum concentration. Sodium hypochlorite exists on site for effluent disinfection. Contractor may not use on-site chemicals.

PART 3 EXECUTION

3.1 METHOD

The method of chlorination shall be “continuous-feed method” in accordance with AWWA C651. Notify Engineer, in writing, at least 48 hours prior to all disinfection procedures and testing.

3.2 FLUSHING

Prior to commencing the disinfection process, flush the water system to remove all dirt and debris. Fill the system at a rate not to exceed 1 foot per second. Once filled, open valves and appurtenances as necessary to achieve flushing velocities on the order of 3 feet per second. Continue flushing until the receiving water is free of visible dirt and impurities. Commence disinfection operations only after the successful completion of flushing and pressure testing operations in accordance with Section 01666. Operation of all valves shall be performed by the Owner unless the Contractor is otherwise directed in writing.

3.3 DOSAGE

Place enough disinfecting material in the system to insure a chlorine dosage of 50 parts per million. This is equivalent to 10 ounces of commercial hypochlorite powder to each 1,000 gallons of water.

3.4 FILLING SYSTEM

Fill entire system with the chlorine solution at a rate not to exceed 1 foot per second. Open all taps and valves and leave open until a strong odor of chlorine is noticeable in the water coming from the outlets, after which close the taps and valves.

3.5 TEST PERIOD

Allow chlorinated water to remain in the system a minimum of 24 hours, and then thoroughly flush the system. During retention period, operate all valves, stops, and other appurtenances to assist the disinfection. Testing shall be done in strict accordance with AWWA C651 disinfection standards.

3.6 DISPOSAL OF CHLORINATED WATER

Dispose of chlorinated water so that no water having a chlorine residual reaches a surface stream.

On completion of disinfecting, the mains and appurtenances shall be thoroughly flushed until the chlorine concentration in the water leaving the main is no higher than that generally prevailing in the system (less than 2 mg/l). Waste chlorinated water shall cause no damage to the environment. A neutralizing chemical shall be applied to the water to thoroughly neutralize any residual chlorine. Disposal of chlorinated water shall only be done in full compliance with all applicable Federal, State and local laws, regulations and ordinances. Chlorinated water shall not be discharged without first being neutralized and authorized by the Engineer.

3.7 BACTERIOLOGICAL EXAMINATION

Contractor shall install suitable sampling taps. After the system has been thoroughly flushed, the Owner will take samples from representative points in the system, in sterile bottles, and submit to proper authorities as directed by the Engineer for bacteriological examination. If the report is unsatisfactory, the Contractor shall repeat the disinfection procedure until satisfactory results are obtained. Retesting shall be performed at no additional cost to the Owner. Re-testing fees include lab work, sample collection, and applicable inspection fees.

END OF SECTION

SECTION 01666

TESTING OF PIPELINES, GRAVITY SEWER LINES, AND MANHOLES

PART 1 GENERAL

1.1 DESCRIPTION

A. The work of this section consists of leak testing all pipelines, gravity sewer lines, manholes, and related valves and fittings. Repaired work shall be retested and if still rejected shall be repaired or replaced to the satisfaction of the Engineer at no additional cost to the Owner.

B. Testing Methods:

1. Pipelines - water test,
2. Gravity Sewer Lines - air test,
3. Manholes - vacuum test,
4. Air piping – air test,
5. SDR 26&35 – additional mandrel testing.
6. Gas piping – as detailed below.

1.2 QUALITY ASSURANCE

A. Flow meters shall record the actual volume plus or minus 2 percent.

B. Air test gauges shall be ANSI/ASME B40.1, Grade 3A (plus or minus 0.25 percent of full scale accuracy), 15 psi dial range.

C. Water test gauges shall be ANSI/ASME B40.1, Grade 2A (plus or minus 0.5 percent of full scale accuracy), dial range approximately twice the required test pressure.

1.3 SUBMITTALS:

A. In accordance with Section 01300.

B. Accuracy certification by approved independent testing labs for flow meters and test gauges. Certifications shall be dated no more than 90 days prior to actual system testing.

C. Prior to testing, provide the following information:

1. All Tests: Describe precautions that will be taken to protect system equipment that might be damaged under test pressures, and the proposed method for rerouting sewer flows where the system must remain in service. Provide pipe test acceptance form, example provided in Appendix A of this Section.

2. High or Low Pressure Water Test: Describe the proposed method for disposal of water used in line testing, coordinate with requirements of specification Section 01656.

3. Test Bulkheads: Submit test bulkhead locations and design calculations, pipe attachment details, and methods to prevent excessive pipe wall stresses.

4. Air Test: Describe safety devices on air test equipment, and personnel safety precautions during air.

1.4 PROJECT CONDITIONS

A. Testing shall not be performed until each system has been flushed or thoroughly cleaned in accordance with procedures in the section that describes sewer line installation.

B. Water for flushing and testing is available as noted in Section 01010.

1.5 TEST RECORDS

Provide records of each piping installation during the testing. These records shall include:

A. Date of Test.

B. Identification of pipeline, or pipeline section, tested or retested.

C. Identification of pipeline material.

D. Identification of pipe specification.

E. Test fluid.

F. Test pressure.

G. Remarks: Leaks identified (type and location), types of repairs, or corrections made.

H. Certification by Contractor that the leakage rate measured conformed to the specifications.

PART 2 MATERIALS

2.1 MANUAL AIR-RELEASE VALVES FOR BURIED PIPING

Provide temporary manual air-release valves for pipeline test. Construct the pipe outlet in the same manner as for a permanent air valve and after use, seal with a blind flange, pipe cap, or plug and coat the same as adjacent pipe.

2.2 TEST BULKHEADS

Design and fabricate test bulkheads per section VIII of the ASME Boiler and Pressure Vessel Code. Materials shall comply with Part UCS of said code. Design pressure shall be at least 2.0 times the specified test pressure for the section of pipe containing the bulkhead. Limit stresses to 70% of yield strength of the bulkhead material at the bulkhead design pressure. Include air-release and water drainage connections.

2.3 TESTING FACILITIES

Provide all necessary temporary facilities required to accommodate specified testing.

PART 3 EXECUTION

3.1 GENERAL

A. Perform testing in the Engineer's presence after backfill and proper compaction of trenches. Where lines are installed under roadways, parking areas, concrete, or structures, perform tests before and after completion of final subgrade preparation and prior to application of surface courses. Notify Engineer in writing at least 48 hours prior to testing. Notification shall be by the Contractor submitting a test form which shall indicate test date, pipeline to be tested, test requirements and requirements of the Owner.

B. Prepare each section for testing, using adequate bracing; protect system equipment susceptible to damage by test pressures; make provision for installation of Owner's pressure gauge in parallel with Contractor's gauge, if so requested; and maintain services where required.

C. Testing requirements are stipulated in Laws and Regulations; are specified in the specifications covering the various types of piping; and are specified herein. Requirements in Laws and Regulations supersede other requirements of Contract Documents, except

where requirements of Contract Documents are more stringent, including higher test pressures, longer test times, and lower leakage allowances.

3.2 PIPELINE TEST PROCEDURE

A. After completion of the installations, Contractor shall test all piping and pipework as herein specified. The Contractor shall furnish all material, equipment, and labor for testing the piping systems.

B. Each system may be tested as a unit or in sections as directed by the Engineer, but each complete system shall successfully meet the requirements specified herein before acceptance by the Engineer.

C. Clean piping before pressure or leak tests.

D. For water testing, the test shall be made by closing valves or providing bulkheads or plugs and filling the pipe lines with water, with provisions made for the release of all air in the lines. Lines shall be filled with water 24 hours prior to testing for leakage to allow for absorption of water by pipe or joint material.

E. Specified pressures or heads of water shall be maintained for the periods of time tabulated herein, except where indicated to be air or vacuum, and the leakage determined. Leakage shall not exceed the tabulated values.

F. Test pressures shall be as indicated herein and in Section 15010. The pressure shall be maintained at all times during the test by restoring it whenever it falls an amount of 5 psi for test pressures above 20 psi and 2 psi for test pressures below 20 psi.

G. If leakage is more than allowable, the Contractor shall repair or replace the pipeline and retest it. Do not use paints, asphalts, tars, or other type of pipe compounds to eliminate leaks.

H. The Contractor shall take all necessary precautions to prevent any joints from drawing while the pipelines and their appurtenances are being tested and he shall, at his own expense, repair any damage to the pipes and their appurtenances, or to any other structures, resulting from or caused by these tests.

I. Where any section of the piping contains concrete thrust blocks or encasement, wait at least 10 days after the pour to begin testing.

J. After a satisfactory test, remove the testing fluid, remove test bulkheads and other test facilities, and restore the pipe coatings.

Testing Requirements

Type of Pipe	Test Medium	Minimum Test Period	Maximum Allowable Leakage
Gas	(a)	(a)	(a)
Sanitary Drain	(a)	(a)	(a)
Storm Drain (c)	Water (c)	24 hours	50 gallons per mile per inch diameter. At 5 feet test head.
Service Air	Air	1 hour	0
Low Pressure Air Piping	Air	1 hour	0
Liquid-Containing Lines Not Listed Above	Water	2 hours	(b)

(a) Per applicable plumbing code

(b) Exposed pipe shall have no visible leaks. Otherwise, allowable leakage shall be determined by the following formula:

$$L = \frac{SD\,(P)^{1/2}}{133{,}200}$$

Where:

L = allowable leakage, in gallons per hour

S = length of pipe tested, in feet

D = nominal diameter of the pipe, in inches

P = average test pressure during the leakage test, in pounds per square inch (gauge), where test pressure shall be the higher of 2x working pressure, or minimum of 150 psi.

(c) Water or air testing allowed above groundwater. For water testing, leakage rate is for piping installed above groundwater level. If pipe is installed below groundwater, use air test. For air, see subsection 3.3, testing of gravity sewer piping.

3.3 GRAVITY SEWER SYSTEMS TEST PROCEDURE

A. Air Test: Test lines less than or equal to 30 inches in diameter between manholes with low pressure air. Safety requires regulator or relief valve on pressurizing equipment, set at 8 psig. No one will be allowed in manholes while there is air pressure against test plugs.

Lines greater than 30-inches in diameter shall include individual joint testing as specified.

B. Plug all pipe outlets to resist test pressure. Give special attention to laterals. Plug all other pipes in both upstream and downstream manholes.

C. Supply air into the line until the test pressure of 3.5 psi in excess of the ground water pressure is attained or 8 psi, whichever is greater. Allow at least 5 minutes for air temperature in the test section to stabilize.

D. Reestablish the test pressure, and start a stop watch. Determine the time required for pressure to drop 1.0 psig.

E. For 6-inch and smaller pipe only, if the pressure does not drop during the stabilization period, and no additional air has been added, the section undergoing test will have passed without further testing.

F. The pipe section will also have passed if the time observed for the pressure to drop 1.0 psig is greater than that determined by using Table 1.

Determine the test time from the table below (minimum time 60 seconds).

Minimum Test Time for Various Pipe Sizes

Size	Time per 100-feet	Size	Time per 100-feet	Size	Time per 100-feet
4-inch	0.3-min.	12-inch	1.8-min.	24-inch	3.6-min
6-inch	0.7-min.	15-inch	2.1-min.	27-inch	4.2-min.
8-inch	1.2-min.	18-inch	2.4-min.	30-inch	4.8-min.
10-inch	1.5-min.	21-inch	3.0-min.		

G. When a combination of more than one pipe size is under test, the calculated time for the larger pipe shall apply.

H. For larger sewer pipes, refer to the material specification for testing requirements.

I. Any potions which fail the test shall be repaired and retested until they meet the requirements in the attached table of this section.

3.4 VISUAL TEST FOR PIPELINES

Interior visual inspection shall be conducted by the Owner and/or CCTV inspection may be performed by the Owner. The Owner's Inspector shall visibly inspect the line and record findings. Preliminary inspections may be performed by outside contractors, but shall not be accepted by Engineer as an official record.

The sewer system shall be completely cleaned by an approved method prior to visual inspection. The sewer system shall be rejected if any of these conditions exist:

A. Standing water or sags greater than ½-inch in depth.

B. Standing water in services.

C. Offset joints.

D. Cracked pipe.

E. Infiltration.

3.5 TELEVISION TEST FOR PIPELINES

Any portion of the new piping system may be TV'd by the Owner. Any construction deficiencies discovered during TV'ing shall be corrected by the Contractor and the line TV'd again. There will be no cost to the Contractor for the initial TV test. All re-inspection costs including soil density testing, quality assurance observation, and re-testing inspection, shall be paid for by the Contractor.

3.6 DEFLECTION TESTING OF FLEXIBLE PIPE

All flexible PVC pipe shall be tested for over-deflection as specified below.

3.7 LEAKAGE TEST FOR MANHOLES

Sewer manholes shall pass a vacuum test consisting of the following criteria and procedures:

A. The Contractor shall notify the Engineer at least 72-hours in advance to be present during testing without exception.

B. The test shall be performed after assembly of the manhole, but prior to backfilling. The Contractor shall perform the test and supply all test equipment. A City Inspector shall witness the test results.

C. Lift holes shall be filled with non-shrinking grout prior to testing.

D. Pipe entering and existing the manhole shall be plugged. Securely brace the plugs to prevent them from being drawn into the manhole. Unused channels shall be permanently plugged with a plastic or clay stop and filled with grout.

E. A vacuum of 10-inches of mercury shall be drawn to start the test. The amount of time required for the vacuum to drop to 9-inches shall be measured. The manhole will pass the test if the amount of elapsed time is greater than 60 seconds for a 48-inch manhole, 75 seconds for a 72-inch manhole, and 120 seconds for a 84-inch manhole. A liquid filled vacuum gauge shall be used for testing.

F. If the manhole fails the initial test, necessary repairs shall be made with a non-shrink grout while the vacuum is still being drawn. Retesting shall proceed until the elapsed times are satisfactory.

G. After passing the vacuum test, all joints shall then be mortared, inside and out. Outside mortared joints shall be allowed to dry before backfilling.

3.8 ADDITIONAL TESTING FOR PLASTIC PIPING AND FITTINGS

A. Field Inspection for Plastic Pipe and Fittings: Installed pipe shall be tested to ensure that vertical deflections for plastic pipe do not exceed the maximum allowable deflection. All SDR 26 and 35 PVC Sewer Pipe shall be mandrel tested by the Contractor as outlined below. All C905 PVC pipe may be measured by the Engineer for over-deflection above 3%. Maximum allowable deflections for SDR 26 and 35 pipe shall be governed by the mandrel requirements stated herein and shall nominally be the percentage listed of the maximum average ID.

Nominal Pipe Size	Percentage
Up to and including 12-inch	5.0
Over 12-inch to and including 30-inch	4.0
Over 30-inch	3.0

B. The maximum average ID shall be equal to the average OD per applicable ASTM Standard minus two minimum wall thicknesses per applicable ASTM Standards. Manufacturing and other tolerances shall not be considered for determining maximum allowable deflections.

C. Deflection tests shall be performed not sooner than 30 days after completion of placement and densification of backfill. The pipe shall be cleaned and inspected for offsets and obstructions prior to testing.

D. For all pipes less than 24-inch ID, a rigid mandrel shall be pulled through the pipe by hand to ensure that maximum allowable deflections have not been exceeded. Prior to use, the mandrel shall be certified by the Engineer. Use of an uncertified mandrel or mandrel altered or modified after certification will invalidate the test. If the mandrel fails to pass, the pipe will be deemed to be overdeflected.

E. Unless otherwise permitted by the Engineer any overdeflected pipe shall be uncovered and, if not damaged, reinstalled. Damaged pipe shall not be reinstalled, but shall be removed from the Work site. Any pipe subjected to any method or process other than removal, which attempts, even successfully, to reduce or cure any overdeflection, shall be uncovered, removed from the Work site and replaced with new pipe.

F. The mandrel shall:

1. Be rigid, non-adjustable, odd-numbering-leg (9 legs minimum) mandrel having an effective length not less than its nominal diameter.

2. Have a minimum diameter at any point along the full length as follows:

Pipe Material	Nominal Size (inches)	Minimum Mandrel Diameter [(a)] (inches)
PVC-ASTM D 3033 (SDR 35)	6	5.619
	8	7.309
	10	9.137
	12	10.963
	15	13.849
PVC-ASTM F 679 (T-1 Wall)	18	16.924
	21	19.952
	24	22.446
	27	25.297
	30	28.502
	36	35.03

(a) Mandrel diameters of SDR 26 pipe shall be based on 4% deflection of the average inside diameter.

3. Be fabricated of steel, be fitted with pulling rings at each end, be stamped or engraved on some segment other than a runner indicating the pipe material specification, nominal size and mandrel OD, (e.g., PVC D 3034-8”-7.524”; and be furnished in a suitable carrying case labeled with the same data as stamped or engraved on the mandrel.

4. All costs incurred by the Contractor attributable to mandrel and deflection testing, including any delays, shall be borne by the Contractor at no cost to the Owner.

APPENDIX A
PIPE TEST ACCEPTANCE FORM

Project Name _____

Project Location _____

Contractor_____ | Date of Test _____

Pipe Section to Be Tested

Process _____

Starting Point _____

Ending Point _____

Pipe Material _____ Spec Section: _____

Test Fluid Air ☐ Water ☐ +Mandrel ☐

Starting Pressure (gauge reading) _____ Ending Pressure (gauge reading) _____

Test Start Time: _____ Test End Time: _____

Initial Test ☐ Re-Test ☐

Pass ☐ Fail ☐

Comments:
(If this is a re-test, describe repairs made or actions taken. If test requires mandrel and deflection measurements, include here)

END OF SECTION

SECTION 01670

EQUIPMENT AND SYSTEM TESTING AND STARTUP

PART 1 GENERAL

1.1 DESCRIPTION

This section contains requirements for Performance Testing, Facility Startup/Operational Testing, and the Demonstration Period for all the mechanical, electrical, and instrumentation, equipment and systems. In addition, this section contains requirements for the documentation of all testing work. This section supplements the specific testing requirements found in the individual sections of these Specifications.

1.2 RELATED WORK

A. Section 01300: Submittals

B. Section 01675: Training

C. Section 01680: Operating and Maintenance Manuals

D. Section 11010: General Mechanical Equipment Provisions

1.3 GENERAL SEQUENCE OF TESTING AND STARTUP

The general sequence of testing and startup will proceed as follows. Expanded information on each item is presented later in this Section:

A. SUBMITTALS: All relevant submittals, operation and maintenance manuals and factory testing shall be completed and acceptable to the Engineer.

B. CALIBRATION: All test equipment to be used during the testing shall be calibrated.

C. TESTING PREPARATION: Preparation for actual testing will then take place (visual inspections, lubrication, etc.)

D. PERFORMANCE TESTING (8 HOURS): Performance Testing shall be conducted on each piece of equipment to verify its operation prior to putting the entire system on-line.

Performance Testing will be for a continuous 8-hour period for each piece of equipment. Additional information as required in specification Section 11010-3.5.

E. TRAINING: Training of the Owner's personnel shall take place after the Contractor has verified that the individual pieces of equipment are in working order.

F. FACILITY STARTUP/OPERATIONAL TESTING (5-DAYS): Facility Startup/Operational Testing will then follow. The Operational Testing is to verify that the facility as a whole is functioning properly. Operational Testing will be for a continuous 5-day period.

G. DEMONSTRATION PERIOD (30-DAYS): The Demonstration Period will be used to demonstrate the longer term functionality of the facility. The Demonstration Period will be for a continuous 30-days.

1.4 CONTRACTOR'S TESTING MANAGER

The Contractor shall appoint a qualified professional as the Contractor's Testing Manager to manage, coordinate, and supervise the Testing Program. The qualified professional shall have at least (5) five years experience in managing the startup and operation of mechanical, electrical, instrumentation, HVAC, and piping systems.

1.5 SUBMITTALS

Submittals shall be provided in accordance with Section 01300 and shall include the following information:

A. The Contractor shall designate in writing the appointed Testing Manager, including a resume demonstrating compliance with the requirements of this Section, to the Engineer prior to implementation of the Testing Program.

B. Submit the credentials and certification of the testing laboratory proposed by the Contractor for calibration of all test equipment.

C. A schedule for the Performance Testing, Facility Startup/Operational Testing, and Demonstration Period updated monthly (weekly when testing is taking place).

D. An Equipment Testing Plan to be used during Performance Testing. An example 8-hour testing plan template is provided in an Appendix to this Specification.

E. A Facility Startup/Operational Testing and Demonstration Plan. An example 5-day testing plan template is provided in an Appendix to this Specification.

F. Calibration and Performance Test results, documented as required by the test program, of equipment or system prior to commencement of the Operational Test.

G. The original and three copies of all records produced during the Testing Program.

H. Completed Equipment Test Report forms for each piece of equipment.

PART 2 MATERIALS

2.1 EQUIPMENT TESTING PLANS

A. The objective of the Equipment Testing Plan shall be to demonstrate, to the Engineer's complete satisfaction, that the structures, systems, and equipment meet all the performance requirements. In addition, the Equipment Testing Plan shall produce a record of baseline operating conditions for the Owner.

B. The Contractor shall participate with the Engineer in the development of the Equipment Testing Plan which will be based on the detailed testing requirements as stated in the individual Specification sections. The Equipment Testing Plan shall be divided into the various process systems. The Equipment Testing Plan shall include tests and documentation procedures for the calibration of all analysis instruments and control sensors followed by step-by-step procedures for the Performance Testing, Facility Startup/Operational Testing, and Demonstration Testing for each individual item of mechanical, electrical, and instrumentation equipment, and for the facility as a whole as specified in the individual Sections. The Contractor shall be responsible for leading the development of the Equipment Testing Plan effort and the Equipment Testing Plan shall be reviewed and accepted by the Engineer prior to beginning any testing.

C. The Contractor shall submit Equipment Test Report Forms for each item of equipment to be tested. The minimum information to be included shall be as follows:

1. Project Name.
2. Equipment or item tested (including tag numbers).
3. Date and time of test.
4. Type of test performed (Performance or Operational).
5. Test conditions.
6. Manufacturer’s representatives present during testing (if applicable)
7. Temporary systems required during the testing (if applicable)
8. Test results.
9. Calibration documentation for all test equipment (including test laboratory)

10. Signature space for Contractor and Engineer.

11. Additional information as required in specification Section 11010-3.5.H and Division 16.

D. The Contractor shall prepare a testing schedule in bar graph form establishing the time period when the Contractor plans to proceed with the testing of the completed systems and each system element. The schedule shall include a description of the temporary systems and installations planned to allow testing to take place. The schedule shall detail the sequence, time and duration of Performance Testing, Facility Startup/Operational Testing, and the Demonstration Period. No testing or startup shall take place on dates and times other than those given in the testing schedule.

PART 3 EXECUTION

3.1 CONTRACTOR'S RESPONSIBILITIES

A. The Contractor shall provide, at no expense to the Owner, all fuel, chemicals, compressed air supplies, all labor, temporary piping, valves, gauges, test equipment, heating, ventilating, air conditioning and all other items and work required to complete the tests. Temporary facilities shall be maintained until permanent systems are in service.

B. The Contractor shall arrange for the manufacturer's representatives to revisit the Site as often as necessary to correct malfunctions to the Engineer's satisfaction.

3.2 CONTRACTOR'S TESTING MANAGER

A. The Contractor's Testing Manager shall organize qualified representatives of equipment suppliers, subcontractor's, the Contractor's independent testing laboratory, and others, as appropriate, to calibrate and test the equipment, systems, and the facility as a whole. Testing shall follow the procedures and sequences as described in the Equipment Testing Plan.

B. Test results shall be documented on forms provided in the Equipment Testing Plan, including but not limited to the Equipment Test Report, as previously described.

C. The Contractor's Testing Manager shall conduct at least weekly meetings with the test team and the Engineer beginning one week prior and continuing during equipment testing periods to discuss procedures and testing results.

D. The Testing Manager shall be present during equipment testing, facility startup, and meetings and shall be available at all times during the Demonstration Period.

3.3 TEST EQUIPMENT CALIBRATION

A. The Contractor shall conduct a calibration program for all instruments, gages, meters, monitors, and thermometers used for determining the performance of equipment and systems to be tested.

B. All test equipment (gages, thermometers, meters, analysis instruments, and other equipment) used for calibrating or verifying the performance of equipment installed under this contract shall be calibrated to an accuracy at least as accurate as the tolerance specified for the item being tested with ±2% of actual value at full scale being the maximum allowable. Test equipment employed for individual test runs shall be selected so that expected values as indicated by the detailed performance specifications will fall between 60 and 85% of full scale.

C. Pressure gages shall be calibrated in accordance with ANSI/ASME B40.1. Thermometers shall be calibrated in accordance with ASTM E77. Liquid flow meters, including all open channel flow meters and all meters installed in pipelines with diameters greater than 2" shall be calibrated in situ using either the total count or dye dilution methods. Ultrasonic level and magnetic type flow meters shall be calibrated per manufacturers' recommendations. For gas flow meters installed in piping systems with diameters greater than 6", factory calibration curves for the primary element shall be submitted and the transmitters shall be calibrated onsite per factory specifications.

3.4 TESTING PREPARATION

The following steps apply to each process system or facility as it is readied for startup and operation:

A. SUBMITTALS: All submittals relevant to installation practices, equipment, piping, anchorage calculations, instrumentation, materials, and testing plans have been submitted to the Engineer and received "No Exceptions Taken" or "Make Corrections Noted" review status.

B. FACTORY TESTING: Where required prior to the shipment of equipment to the site, complete factory testing. Such testing may be both unwitnessed and witnessed by the Engineer and/or Owner as specified and at their discretion.

C. OPERATIONS AND MAINTENANCE MANUALS: Operations and maintenance manuals for equipment shall be submitted and receive "No Exceptions Taken" or "Make Corrections Noted" review status.

D. CONSTRUCTION COMPLETE: Construction is substantially complete so that facility is ready to be used for its intended purposes and all signage is posted. All construction deficiencies shall be corrected prior to testing, unless agreed by Owner that testing can begin concurrent with correcting a construction deficiency.

E. INSPECTION: Inspect and clean equipment, devices, connected piping, and structures to ensure they are free of foreign material.

F. LUBRICATION: Lubricate equipment in accordance with manufacturer's instructions.

G. REGULATORY AGENCY APPROVALS: Conduct inspections by and tests for regulatory agencies (Fire Marshal, Air Quality Control Board, etc.) and receive approvals needed to operate system. Provide written information required by regulatory agencies.

3.5 PERFORMANCE TESTS

A. General:

1. Each item and system of mechanical, electrical, and instrumentation equipment installed under this contract shall be tested for 8-hours continuously to demonstrate compliance with the performance requirements of the individual Specification sections, unless otherwise specified.

2. Follow the approved Equipment Testing Plan and detailed procedures specified. Unless otherwise indicated, furnish all labor, materials, and supplies for conducting the test and taking all samples and performance measurements. Prepare Performance Test reports summarizing test methods and results as described in the Equipment Testing Plan.

3. The Contractor is responsible for performance testing of all project equipment and systems in all modes of operation including remote PLC modes of operation.

4. The Contractor shall test the utility, chemical feed, safety equipment and other support systems before testing the process system.

B. Pressure and leakage tests: Pressure and leakage tests shall be conducted in accordance with applicable portions of Divisions 1, 2, 3, 10, 13, and 15 and shall be completed prior to any testing of connected mechanical equipment or valves. All tests shall be witnessed by the Engineer.

C. Calibration: Calibration of analysis instruments, sensors, gages, and meters installed under this contract shall proceed on a system-by-system basis. No equipment or system Performance Tests shall be performed until instruments, gages, and meters to be installed in that particular system have been calibrated and the calibration work has been witnessed by the Engineer. Calibrate testing equipment in accordance with the manufacturer’s instructions. The Contractor shall execute and submit completed Instrument Calibration Test Data Forms.

D. Mechanical systems: Manufacturer's representatives shall confirm that all equipment and valves are properly installed before first operation and shall conduct/oversee the initial operation and testing. All mechanical systems shall be tested as specified in the individual equipment specification sections and as follows:

1. Ensure and demonstrate that equipment and valves operate properly and reliably. Open and close valves by hand and operate other devices to check for binding, interference, or improper functioning.

2. Inspect hand and motorized valves for proper adjustment. Tighten packing glands to insure no leakage, but permit valve stems to rotate without galling. Verify valve seats are positioned for proper flow direction.

3. Tighten leaking flanges or replace flange gasket. Inspect screwed joints for leakage.

4. Equipment that is capable of automatic or remote operation shall be tested first in manual mode. Limit switches shall be set and adjusted on all valves so equipped. Setpoints on all pressure regulating, pressure relief, vacuum relief, and other valves with setpoints shall be confirmed and reset as directed by the Engineer.

5. Remove rust preventatives and oils applied to protect equipment during construction.

6. Flush lubrication systems and dispose of flushing oils. Recharge lubrication system with lubricant recommended by manufacturer.

7. Flush fuel system and provide fuel for testing and start-up.

8. Install and adjust packing, mechanical seals, O-rings, and other seals. Replace defective seals.

9. Remove temporary supports, bracing, or other foreign objects installed to prevent damage during shipment, storage, and erection.

10. Check rotating machinery for correct direction of rotation and for freedom of moving parts before connecting driver. Turn rotating equipment by hand when possible to confirm that equipment is not bound.

11. Perform cold alignment and hot alignment to manufacturer's tolerances.

12. Adjust V-belt tension and variable pitch sheaves.

13. Startup tests of pumps, motors, and VFD’s shall be performed to verify pump performance and operation over the full operating range from minimum head/flow up to maximum head/maximum capacity.

14. Install gratings, safety chains, handrails, shaft guards, and sidewalks prior to Facility Startup/Operational Testing.

E. Electrical systems: Testing shall be performed in three stages as specified in the individual equipment specification sections, Division 16 and as follows:

1. The first stage shall consist of electrical equipment testing prior to energization and operation of electrical equipment (See Division 16 specifications and Sections 16011, 16011, and 16030). Testing, calibration, and setting of electrical conductors, equipment, protective devices, grounding, and other components as specified in the electrical sections of the Specifications shall be conducted prior to equipment startup. This also includes bumping all motors to verify the direction of rotation.

Unsatisfactory equipment test results shall require that the equipment be repaired and re-tested until acceptable results are obtained at no additional cost to the Owner.

2. The second stage of electrical testing shall occur after energization and start-up of equipment and shall consist of complete testing of all other equipment as specified in the Electrical Sections.

3. The third stage of testing will take place during the Operational Testing and shall include all possible operating scenarios, alarm conditions, prohibitive interlocks, and indication functions.

F. Instrumentation: Conduct field calibration, loop acceptance, and end-to-end testing as specified in the individual Instrumentation Sections. Bench or field calibrate instruments and make required adjustments and control point settings. Energize transmitting and control signal systems, verify proper operation, ranges, and settings. Demonstrate proper operation of each instrument loop function including alarms, local and remote controls, instrumentation and other equipment functions. Generate signals with test equipment to simulate operating conditions in each control mode

G. Permanent utilities: Conduct Performance Tests on utilities impacted, constructed, or modified by construction, as specified in the applicable Sections.

H. Demonstration: Demonstrate proper rotation, alignment, speed, flow, pressure, vibration, sound level, adjustments, and calibration over the full operating range of equipment and systems. Perform initial checks in the presence of and with the assistance of the manufacturer's representative.

I. Telecommunications system testing: Telecommunications testing shall be as specified in the applicable Section.

3.6 TEST RESULTS

A. Test results shall be within the tolerances stated in the individual Specification sections. If no tolerances have been specified, test results shall conform to tolerances established by recognized industry practice. When, in Engineer’s opinion, equipment meets performance requirements specified, such equipment will be accepted as to conforming with Contract requirements.

B. Should any doubt, dispute, or difference arise between the Engineer and the Contractor regarding the test results or the methods or equipment used in the performance of the testing, then the Engineer may order the test to be repeated. If the repeat test, using such methods or equipment as the Engineer requires, substantially confirms the previous test, then all costs in connection with the repeat test will be paid by the Owner, otherwise the costs shall be borne by the Contractor. All costs associated with repeat testing due to failed test results shall be borne by the Contractor, including the Engineers expenses.

C. If any portion of the work should fail to fulfill the contract requirements and is adjusted, altered, renewed, or replaced, tests on that portion of the work together with all other affected portions of the work, shall, be repeated within reasonable time and in accordance with the specified requirements. The Contractor shall pay to the Owner all reasonable expenses incurred by the Owner, including the costs of the Engineer, as a result of repeating such tests.

3.7 POST TEST INSPECTION

Once Performance Testing has been completed, all machines shall be rechecked for proper alignment and realigned, as required. All equipment shall be checked for loose connections, unusual movement, or other indications of improper operating characteristics. Any deficiencies shall be corrected to the satisfaction of the Engineer. All machines or devices, which exhibit unusual or unacceptable operating characteristics, shall be disassembled and inspected. Any defects found during the course of the inspection shall be repaired or the specific part or entire equipment item shall be replaced to the complete satisfaction of the Engineer, at no cost to the Owner.

3.8 MANUFACTURER'S CERTIFICATE OF PROPER INSTALLATION

A. Upon completion of Performance Testing and prior to Facility Startup/Operational Testing, the Contractor shall submit the Manufacturer's Installation Certification Form certifying that the equipment:

1. Has been properly installed, adjusted, aligned, and lubricated.
2. Is free of any stresses imposed by connecting piping or anchor bolts.
3. Is suitable for satisfactory full-time operation under full load conditions.
4. Operates within the allowable limits for vibration.
5. Controls, protective devices, instrumentation, and control panels furnished as part of the equipment package are properly installed, calibrated, and functioning.
6. Control logic for start-up, shutdown, sequencing, interlocks, and emergency shutdown have been tested and are properly functioning.

B. The Contractor shall also submit the Manufacturer's Installation Certification Form signed by the electrical and/or instrumentation Subcontractor certifying:

1. Control logic that resides in motor control centers, control panels, and circuit boards furnished by the electrical and/or instrumentation subcontractor has been calibrated and tested and is properly operating.
2. Control logic for equipment start-up, shutdown, sequencing, interlocks and emergency shutdown has been tested and is properly operating.

C. The Contractor shall co-sign the Manufacturer's Installation Certification Form along with the manufacturer's representative and Subcontractors and deliver the reports to the Engineer prior to Facility Startup/Operational Testing.

3.9 TRAINING

The Contractor shall conduct the training of the Owner's staff as specified for equipment and facility operation and maintenance before each associated system is placed into service. Refer to Section 01675 – Training for specific requirements.

3.10 FACILITY STARTUP AND OPERATIONAL TESTING

After completion of all Performance Testing and operator training the Contractor shall begin the Facility Startup and conduct Operational Tests of each system as described herein. Contractor shall conduct the Operational Test for a continuous 5-day period.

A. Facility Startup/Operational Plan:

1. Develop a plan in conjunction with Owner's operations personnel detailing step-by-step instructions for startup of each unit process and the complete facility.
2. Include a method of evaluation and overall performance reports for each unit process, utilizing the Startup and Performance Evaluation Forms. Startup and Performance Evaluation Forms will minimally include the following:
    a. Description of unit process being started.
    b. All equipment and devices included in the unit process.
    c. Unit process startup procedures (i.e., valves to be open/closed, order of equipment startup, etc.).
    d. Requirements for water, power, chemicals, etc. needed for startup.
    e. Space for performance evaluation comments.

B. Owner's responsibilities:

1. Assist Contractor in developing a Facility Startup and Demonstration Plan detailing step-by-step instructions for startup of each unit process and the complete facility.
2. Provide water and power for testing and facility startup, unless otherwise indicated.
3. Operate process units and devices, with support of Contractor.
4. Provide labor and materials as required for sampling and laboratory analyses.

C. Facility startup/operational testing period:

1. Startup sequence of the unit processes shall be in accordance with the Facility Startup/Operation Plan developed by the Contractor and the Owner, and as approved by the Engineer.

2. Startup of the entire facility or any portion thereof shall be considered complete when, in the opinion of the Engineer, the facility or designated portion has operated in manner intended for 5-continuous days, without interruption, unless otherwise specified. This period is in addition to training, or Performance Test periods specified elsewhere.

3. Repeat the Operational Test when malfunctions or deficiencies cause shutdown or partial operation of the facility or results in performance that is less than specified, as determined by the Engineer. Any interruption will require the startup then in progress to be stopped and restarted for an additional 5-continuous days, after corrections are made.

D. Facility performance evaluation:

1. During the Facility Startup/Operational Testing Period, conduct a performance evaluation to determine the full capabilities of the facility and performance of the computer system, until all unit processes are operable and under control of the computer system.

2. Certify, on the Startup and Performance Evaluation Forms that each unit process is capable of performing its intended function(s), including fully automatic and computerized operation.

3.11 DEMONSTRATION PERIOD

A. After successful completion of the Performance, Facility Startup/Operational Testing and when the Owner is ready to accept the system, the system shall be placed into full operational condition.

B. The Contractor, Engineer, and the Owner's operations personnel shall first develop an outline of the steps for the startup and initial operation of each area under actual operating conditions of the equipment and systems. The document shall serve as guidance for the Demonstration Period.

C. The Owner's certified operations personnel shall operate the facility under the direction and supervision of the Contractor for a 30-day period. The Contractor shall be available within 24-hours notice to provide repairs, assistance, or adjustments in case of failure of any portion of the system.

D. During the Demonstration period, the Owner shall be responsible for all normal operational costs and the Contractor shall bear the costs of all necessary repairs or replacements, including labor and materials.

E. Owner reserves the right to simulate operational variables, equipment failures, routine maintenance scenarios, etc., to verify the functional integrity of the system.

F. The facility shall be fully operational, performing all functions for which it was designed. If, during the Demonstration Period the aggregate amount of time used for repairs, alterations, or unscheduled adjustments to any equipment or systems that renders the affected equipment or system inoperative exceeds 10-percent of the Demonstration Period, then the Demonstration Period will be deemed to have failed. In the event of failure, a new Demonstration Period will recommence after correction of the cause of failure. Any new Demonstration Periods shall have the same requirements and durations as the first period.

G. Time of beginning and ending of the Demonstration Period shall be agreed upon by the Contractor Owner and the Engineer, in advance of initiating the Demonstration Period.

H. At the end of the Demonstration Period and when all corrections required by the Engineer to assure a reliable and completely operational facility are complete and all test reports have been submitted and approved, the Engineer shall issue a Final Completion Certification, unless otherwise noted in the General Conditions.

APPENDIX A

EXAMPLE 8-HOUR PERFORMANCE TEST PLAN TEMPLATE

_____(*equipment*)____ 8-Hr. Performance Test Plan

Note: ___(Equipment) ___8-Hr. Performance testing will be performed in conjunction with integral equipment "xyz1", "xyz2" & "xyz3" 8-hr Performance testing.

Inspector Contractor

Int. ____ ____ **A.** **Verify visual inspection of ___*(equipment)*___.**

Comments:_____

_____

Int. ____ ____ **B.** **Verify control and power wire loop checks complete.** Provide documentation.

Comments:_____

_____

Int. ____ ____ **C.** **Verify SCADA programming completed.**

Comments:_____

_____

Int. ____ ____ **D.** **Perform electrical testing as per attached template sheets.** Confirm submittal acceptance of harmonics study and coordination/short circuit analysis prior to energizing any equipment (see 16010). Confirm megger test, VFD test, instrumentation testing, I/O testing, gauge calibration, and all other electrical testing have been complete.

Comments:_____

_____

Int. ____ ____ **E.** **Verify vendor start up has been completed.** Provide vendor start up documentation.

Comments:_____

_____

Int. ____ ____ **F.** **Set downstream process ___*(xyz)*___ to Auto, and coordinate with plant operations for permission to discharge water.**

Comments:_____

_____

Int. ____ ____ **G.** **Manually start equipment. Close ____*(valves, gates, xyz)*__ and check alarm is activated in SCADA and equipment automatically shut down.** Note equipment warnings ____*(don't run dry, xyz)*____.

Comments:_____

_____

Int. ____ ____ **H.** **Verify related equipment _____*"xyz1, xyz2, and xyz3"*_____ are sending flow to ____*(equipment)*__ as per *"xyz1"*, *"xyz2"*, and *"xyz3"* 8-hour performance testing plans.**

Comments:_____

_____

Int. ____ ____ **I.** **Set ____*(equipment)*___ in "auto" and run them through SCADA, for 8-hrs each.** Check that all status items are read in SCADA, see attached P&IDs to confirm all I/O.

Comments:_____

_____

Int. ____ ____ **J.** **Verify ____*(equipment)*___ are working properly.** See attached process control narrative to ensure proper operation strategy (before, during and after equipment startup).

Comments:_____

_____

____

Int. ____ ____ **K.** **Open ____*(equipment)*___ associated equipment _____*(SOV wash water, conveyor, automatic gates, xyz)*_____ are working properly.** Associated equipment should be run through SCADA and they should open for a pre-set amount of time when equipment is off

Comments:_____

_____

APPENDIX B

EXAMPLE 5-DAY OPERATIONAL TEST PLAN TEMPLATE

____*(xyz process)*___ 5-Day Operational Testing

Inspector Contractor

Int. ____ ____ **1. Verify process upstream equipment _____*(xyz, xyz, and xyz)*___ 8-Hr performance test is complete and is working properly. Ensure liquid is available for testing *(sludge, chemical, gas, water, xyz)*____.**

Comments:_____

_____

Int. ____ ____ **2. Verify process downstream equipment _____*(xyz, xyz, and xyz)*___ 8-Hr performance test is complete and is working properly. Ensure liquid is available for testing *(sludge, chemical, gas, water, xyz)*____.**

Comments:_____

_____

Int. ____ ____ **3. Verify process associated equipment _____*(xyz, xyz, and xyz)*___ 8-Hr performance test is complete and is working properly. Ensure liquid is available for testing *(sludge, chemical, gas, water, xyz)*____.**

Comments:_____

_____

Int. ____ ____ **4. Place disconnect power in the "ON" position, and ___*(process xyz)*___ systems in "AUTO". Confirm they are picked up by SCADA.**

Comments:_____

_____

Int. ____ ____ **5. Start upstream equipment in Auto and run ___*(equipment xyz)*___ trough SCADA.**

Comments:_____

_____

Int. ____ ____ **6. Coordinate with Operational Staff and verify they are ready to receive discharge into their system.**

Comments:_____

_____

Int. ____ ____ **7. Verify all necessary valves are in open position.**

Comments:_____

_____

Int. ____ ____ **8. Start downstream equipment in Auto and run ___*(equipment xyz)*___ through SCADA.**

Comments:_____

_____

Int. ____ ____ **9. Start process equipment in Auto and run ___*(equipment xyz)*___ through SCADA, all equipment should start and stop automatically.**

Comments:_____

_____

Int. ____ ____ **10. Check process control narrative to ensure all equipment is running as designed (time delay, water level, position switch, etc).**

Comments:_____

_____

Int. ____ ____ **11. Verify level indicators, flow meters, pressure gauges, etc. are working properly and signals are being picked by SCADA (see attached P&ID).**

Comments:_____

_____

Int. ____ ____ **12. Close downstream *(gates, valves, xyz)* in system. This should send out an alarm and automatically shut down *xyz, xyz2, and xyz3* systems.**

Comments:_____

_____

Int. ____ ____ **13. Process fluids for 5-days. And verify every system is working properly.**

Comments:_____

_____

END OF SECTION

SECTION 01675

TRAINING

PART 1 GENERAL

1.1 DESCRIPTION

This section contains requirements for training the Owner's personnel, by persons retained by the Contractor specifically for the purpose, in the proper operation and maintenance of the equipment and systems installed under this contract. All costs for training shall be the responsibility of the Contractor.

1.2 RELATED WORK

A. Section 01300: Submittals

B. Section 01670: Equipment and System Testing and Startup

C. Section 01680: Operation and Maintenance Manuals

1.3 QUALITY ASSURANCE

A. The Contractor shall provide on-the-job training of the Owner's personnel for all equipment identified in the technical specifications. The training sessions shall be conducted by qualified, competent, experienced (two years minimum), manufacturers' factory-trained representatives (not sales representatives) of the various equipment manufacturers. Representatives shall be thoroughly familiar with instructional methods in addition to the subject matter.

B. If, in the opinion of the Owner, an appropriately knowledgeable person did not provide the scheduled training, such training shall be rescheduled and repeated with a suitable instructor at no additional cost to the Owner.

C. Training shall include instruction of operating personnel in equipment operation in one session, and preventive maintenance and instruction of station mechanics, electricians, and electronics technicians in normal maintenance up to major repair in a separate session.

1.4 SUBMITTALS

A. The Contractor shall submit a training plan to the Engineer for review, in accordance with the provisions of Section 01300 – Submittals. The submitted training plan shall include lesson materials in addition to a training schedule as follows:

1. A class agenda and lesson plans for each training session to be conducted by the manufacturer's representatives shall be submitted. In addition, training manuals, handouts, visual aids, and other reference materials shall be included.

2. Date, time, and subject of each training session and identity the qualifications of individuals to be conducting the training.

3. Provide a training schedule with a minimum of two sessions of each class to facilitate the attendance of the Owner’s personnel. Concurrent classes will not be allowed.

B. The Contractor shall submit a list of all equipment items or systems for which training will be provided in accordance with the specifications. The list shall include item number, specification section, description and required training in hours.

PART 2 MATERIALS

2.1 GENERAL

Where specified in Divisions 11, 13, 14, 15, and 16 the Contractor shall conduct training sessions for the Owner's operating personnel in one session to instruct the staff on the proper operation of the equipment, and maintenance and repair personnel in a separate session to instruct the staff on the proper care and maintenance of the equipment and systems installed under this contract. Training shall take place at the site of the work and under the conditions specified in the following paragraphs.

2.2 OPERATION AND MAINTENANCE MANUALS

If training is being conducted on equipment, systems, or products for which an operations and maintenance manual is required, this manual shall be compete, approved by the Engineer and used during the classroom instruction. Approved operating and maintenance manuals shall be available to Owner personnel at least 30-days prior to the date scheduled for the individual training session. Refer to Section 01680 – Operating and Maintenance Materials, for additional requirements.

2.3 LOCATION

Field training sessions shall take place at the site of the equipment. Classroom training facility will be provided by the Owner.

2.4 LESSON PLANS

A. A class agenda shall be prepared and submitted to the Engineer as least 4 weeks in advance of the training sessions. Formal written lesson plans shall be prepared for each training session. Lesson plans shall contain an outline of the material to be presented along with a description of visual aids to be utilized during the session, and the training materials shall include a list of tasks which the Owner's employees may perform with the equipment. Each plan shall contain a time allocation for each subject.

B. One complete set of originals of the lesson plans, training manuals, handouts, visual aids, and reference material shall be the property of the Owner and shall be suitably bound for proper organization and easy reproduction. The Contractor shall furnish three copies of necessary training manuals, handouts, and reference materials and one copy of necessary visual aids at least two weeks prior to each training session. It is estimated that 5 to 10 persons will attend each training session. The Owner will determine the actual number of students and provide and estimated "headcount" one week prior to the class, so that the instructor can furnish the class room materials, samples, and handout for all those in attendance. Five additional copies of all classroom materials, samples, handouts, etc. shall be provided during the training session.

2.5 FORMAT AND CONTENT

For complex equipment and systems, the training for operation personnel and for maintenance personnel shall be provided as separate entities. The training for maintenance personnel shall be further subdivided into two trade groups: mechanical maintenance and electrical/instrumentation maintenance. Each training session shall be composed of time spent both in the classroom and at the specific location of the equipment or system. As a minimum, a training session shall cover the following topics for each item of equipment or system:

Topic	Operations Personnel	Maintenance and Repair Personnel
Familiarization	X	X
Safety	X	X
Operation (Start-up, Shut-down, Normal & Emergency)	X	X
Instrumentation	X	X
Electrical and Mechanical Troubleshooting		X
Preventive Maintenance	X	X
Lubrication of Equipment	X	X
Corrective Maintenance, Repair, and Overhaul		X
Lockout Procedures, Alarm, and Fail-Safe Operation	X	X
Parts (Including Inventory of Spare Parts		X
Local Representatives		X
Operation and Maintenance Manuals	X	X

2.6 VIDEO RECORDING

The Contractor shall record, or retain the services of a commercial video taping service to record, each training session. The videotape shall be transferred onto USB-drives and two copies shall be provided to the Owner. The Contractor shall advise all manufacturers providing training sessions that the material will be video taped.

Video equipment shall include an adjustable focal-distance range from 6 inches to infinity, and produce a minimum resolution of 1280x720. Audio equipment shall be 16-bit minimum.

PART 3 EXECUTION

3.1 TRAINING

A. Training shall be conducted after the Performance Testing and prior to the Facility Startup/Operational Testing. Refer to Section 01670 – Equipment and System Testing, Startup and Demonstration for additional information.

B. Classes shall be scheduled such that classroom sessions are interspersed with field instruction in logical sequence. The Contractor shall consolidate short training sessions into combined sessions so that staff time is more efficiently used. The Contractor shall provide a minimum of two training sessions, each of the required length, on each system, piece of equipment, or "topic." Organize training sessions into maintenance versus operation topics and identify on schedule.

C. No training sessions shall be scheduled for Mondays or Fridays, or legal holidays recognized by the Owner. The Contractor shall coordinate the scheduling of training sessions and the length of the classes with the Owner's Utilities Operations Superintendent.

D. The following services shall be provided for each item of equipment or system as required in individual Specification sections. Additional services shall be provided, where specifically required in individual Specification sections.

1. As a minimum, classroom equipment training for operations personnel shall include:

    a. Using slides and drawings, discuss the equipment’s specific location in the plant and an operational overview.

    b. Purpose and plant function of the equipment.

    c. A working knowledge of the operating theory of the equipment.

    d. Start-up, shutdown, normal operation, and emergency operating procedures, including a discussion on system integration and electrical interlocks, if any.

    e. Identify and discuss safety items and procedures.

f. Routine preventative maintenance, including specific details on lubrication and maintenance of corrosion protection of the equipment and components.

g. Operator detection, without test instruments, of specific equipment trouble symptoms.

h. Required equipment exercise procedures and intervals.

i. Routine disassembly and assembly of equipment if applicable (as judged by the Owner on a case-by-case basis) for purposes such as operator inspection of equipment.

2. As a minimum, hands-on equipment training for operations personnel will include:

a. Identify location of equipment and review the purpose.

b. Identifying piping and flow options.

c. Identifying valves and their purpose.

d. Identifying instrumentation:

1) Location of primary element.

2) Location of instrument readout.

3) Discuss purpose, basic operation, and information interpretation.

e. Discuss, demonstrate, and perform standard operating procedures and round checks.

f. Discuss and perform the preventative maintenance activities.

g. Discuss and perform start-up and shutdown procedures.

h. Perform the required equipment exercise procedures.

i. Perform routine disassembly and assembly of equipment if applicable.

j. Identify and review safety items and perform safety procedures, if feasible

3. Classroom equipment training for the maintenance and repair personnel will include:

a. Theory of operation.

b. Description and function of equipment.

c. Start-up and shutdown procedures.

d. Normal and major repair procedures.

e. Equipment inspection and troubleshooting procedures including the use of applicable test instruments and the "pass" and "no pass" test instrument readings.

f. Routine and long-term calibration procedures.

g. Safety procedures.

h. Preventive maintenance such as lubrication; normal maintenance such as belt, seal, and bearing replacement; and up to major repairs such as replacement of major equipment part(s) with the use of special tools, bridge cranes, welding jigs, etc.

4. Hands-on equipment training for maintenance and repair personnel shall include:

   a. Locate and identify equipment components.

   b. Review the equipment function and theory of operation.

   c. Review normal repair procedures.

   d. Perform start-up and shutdown procedures.

   e. Review and perform the safety procedures.

   f. Perform Owner approved practice maintenance and repair job(s), including mechanical and electrical adjustments and calibration and troubleshooting equipment problems.

   g. Review and use equipment manufacturers' manuals in the hands-on training.

5. Electrical System Training shall be provided for the electrical system. Specific emphasis shall be as follows:

   a. Overview of the plant's electrical system.

   b. Discussion of each item of power distribution equipment in the overall plant.

   c. Loop system operation and possible sectionalizing arrangements.

   d. System protection.

   e. Automatic bus transfer to standby system.

   f. System power monitoring/control.

   g. Maintenance/Fault troubleshooting.

E. Maintain a log of class room training including: Instructors, topics, dates, time, and attendance.

F. The Contractor shall replace equipment that is damaged during the training exercises at no additional cost to the Owner.

END OF SECTION

SECTION 01680

OPERATING AND MAINTENANCE MANUALS

PART 1 GENERAL

1.1 DESCRIPTION

Operating and Maintenance information shall be provided in accordance with this section and as required in the technical sections of these Specifications. Operating and Maintenance information shall be provided for each maintainable piece of equipment, equipment assembly or subassembly, and material provided or modified under this contract. Operating and Maintenance manuals must be submitted and accepted before Performance Testing or on-site training may start.

1.2 RELATED WORK

A. Section 01300: Submittals

B. Section 01670: Equipment and System Testing and Startup

C. Section 01675: Training

1.3 TRANSMITTAL PROCEDURE

A. Unless otherwise specified, Operating and Maintenance information and data shall be transmitted in accordance with Section 01300 – Submittals. Only complete sets of Operating and Maintenance manuals will be reviewed for acceptance. The Contractor shall submit three (3) copies of the Preliminary Manuals for the Engineer's review. After receiving the Engineer's acceptance, five (5) copies of the final manuals shall be submitted (including 5 hard copies as detailed below and PDF copies on 5 USB flash drives. The USB flash drives shall be clearly labeled with text similar to the binder cover (including, project name, product numbers, client, and title.)

B. If the manufacturers' standard brochures and manuals are used to describe Operating and Maintenance procedures, such brochures and manuals shall be modified to reflect only the model or series of equipment used on this project. Extraneous material shall be crossed out neatly or otherwise annotated or eliminated.

PART 2 MATERIALS

2.1 MANUAL FORMAT

One binder shall be provided for each piece of equipment (for example, sump pumps will have a separate binder from vertical turbine pumps) and the Operating and Maintenance information shall be submitted in the following manner.

A. Size: 8-1/2 inches by 11 inches.

B. Paper: 20-pound minimum, white for typed pages.

C. Text: Manufacturer's printed data, or neatly typewritten.

D. Arrange printing so that punched holes do not obliterate data and use hole reinforcements for bound in plan sheets.

E. Provide fly-leaf for each separate product, or each piece of operating equipment, with typed description of product and major component parts of equipment and provide with heavy section dividers with numbered plastic index tabs.

F. Provide each manual with title page, and typed table of contents with consecutive page numbers. Place contents of entire set, identified by volume number, in each binder.

G. Cover and Spine: Identify each volume with typed or printed title "OPERATION AND MAINTENANCE MANUAL, VOLUME NO. __OF__", if applicable, and list:

1. Project title.
2. Designate the system or equipment for which it is intended.
3. Identity of separate structure as applicable.
4. Identity of general subject matter covered in manual.
5. Identity of equipment number and Specification section.

H. Assemble and bind material in same order as specified, as much as possible.

I. Material shall be suitable for reproduction, with quality equal to original. Photocopying of material will be acceptable, except for material containing photographs.

J. Binders:

1. Preliminary Manuals: Heavy paper covers.

2. Final Manuals: Commercial quality, substantial, permanent, three-ring, D-ring, binders with durable, cleanable, plastic binders, plastic-coated section dividers, and plastic sheet lifters prior to first page and following last page.

K. Table of contents neatly typewritten, arranged in a systematic order:

1. Contractor, name of responsible principal, address, and telephone number.
2. List of each product required to be included, indexed to content of each volume.
3. List with each product: Name, address, and telephone number of Subcontractor, Supplier, installer, and maintenance contractor, as appropriate.
    a. Identify area of responsibility of each.
    b. Provide local source of supply for parts and replacement.
4. Identify each product by product name and other identifying numbers or symbols as set forth in Contract Documents.

L. Product Data:

1. Include only those sheets that are pertinent to specific product and delete references to inapplicable information.
2. Clearly annotate each sheet to identify specific product or part installed and identify data applicable to installation.

M. Drawings: Supplement product data with Drawings as necessary to clearly illustrate:

1. Relations of component parts of equipment and systems.
2. Control and flow diagrams.
3. Coordinate drawings with Project record documents to assure correct illustration of completed installation.
4. Do not use Project record documents as maintenance manual drawings.
5. Provide reinforced punched binder tab, bind in with text.
6. Reduced to 8-1/2 inches by 11 inches, or 11 inches by 17 inches folded to 8-1/2 inches by 11 inches.
7. Where reduction is impractical, fold and place in 8-1/2-inch by 11-inch vinyl envelopes bound in text.
8. Identify Specification section and product on Drawings and envelopes.

N. Instructions and Procedures: Within text, as required to supplement product data:

1. Delivery, handling, storage, maintenance during storage, assembly, erection, installation, startup, adjusting, testing, operating, shutdown in emergency, troubleshooting, maintenance, interface, and as may otherwise be required.

2. Organize in a consistent format under separate heading for each different procedure.

3. Provide a logical, sequence of instructions for each procedure. Provide information sheet for Owner's personnel, including:

   a. Proper procedures in the event of failure.

   b. Instances that might affect the validity of Warranties or Bonds.

O. All manuals shall also be provided in an electronic format which includes all information included in the Operation and Maintenance Manuals. Provide the electronic files on USB flash drives. All text portions shall be provided in MS Word format, spreadsheets in Excel format, drawings in AutoCAD format, graphical portions shall in JPEG format, and all other documents including but not limited to brochures that need to be scanned shall be provided in a searchable PDF format. These files shall become the property of the Owner for use in training programs and other uses.

PART 3 EXECUTION

3.1 GENERAL

A. Operating and Maintenance information shall be bound in sturdy, heavy-duty 3-ring binders. One binder shall be provided for each piece of equipment (for example, sump pumps will have a separate binder from vertical turbine pumps). The binders shall be clearly labeled on the front and spine identifying the equipment located in the Operating and Maintenance Manual. For ease of identification, each manufacturer's brochure and manual shall be appropriately labeled with the equipment name and equipment number as it appears in these Contract Documents. The information shall be organized in the binders in numerical order by the equipment numbers assigned in the Specifications. The binders shall be provided with a table of contents and tab sheets to permit easy location of desired information.

B. Operating and Maintenance manuals shall contain the names, addresses, and telephone numbers of the manufacturer, the nearest representative of the manufacturer, and the nearest supplier of the manufacturer's equipment and parts.

C. Provide identification of all parts of each component, assembly, subassembly, and accessory. Include special hardware requirements, such as requirement to use high-strength bolts and nuts. Identify parts by make, model, serial number, and source of supply to allow reordering without further identification. Provide clear and legible illustrations, drawings, and exploded views to enable easy identification of the items. When illustrations omit the part numbers and description, both the illustrations and separate listing shall show the index, reference, or key number which will cross-reference the illustrated part to the listed part. Parts shown in the listings shall be grouped by components, assemblies, and subassemblies. Include control and flow diagrams and panel wiring diagrams. Coordinate drawings to ensure correct illustration of completed installation.

D. All manuals shall also be provided in an electronic format which includes all information included in the Operation and Maintenance Manuals. Provide the electronic files on USB flash drives. All text portions shall be provided in MS Word format, spreadsheets in Excel format, drawings in AutoCAD format, graphical portions shall in JPEG format, and all other documents including but not limited to brochures that need to be scanned shall be provided in a searchable PDF format. These files shall become the property of the Owner for use in training programs and other uses.

3.2 OPERATING INSTRUCTIONS

Specific instructions, procedures, and illustrations shall be provided for the following phases of operations in addition to those required in other sections of this Specification:

A. Safety precautions: List personnel hazards for equipment and list safety precautions for all operating conditions.

B. Operator pre-start: Provide requirements to set up and prepare each system for use.

C. Startup, shutdown, and post shutdown procedures: Provide step-by-step procedures for start-up, break-in, shutdown, and post-shutdown operations. Include recommendations for installation, adjustment, calibration, troubleshooting, regulation, control, stopping, and shutdown operations. Summer and winter operating instructions shall be included as required.

D. Normal operations: Provide control diagrams with data to explain operation and control of systems and specific equipment.

E. Emergency operations: Provide emergency procedures for equipment malfunctions to permit a short period of continued operation or to shut down the equipment to prevent further damage to systems and equipment, as applicable. Include emergency shutdown instructions for fire, explosion, spills, or other foreseeable contingencies. Provide guidance on emergency operations of all utility systems including valve locations and portions of systems controlled.

F. Operator service requirements: Provide instructions for services to be performed by the operator such as lubrication, adjustments, and inspection.

G. Environmental conditions: Provide a list of environmental conditions (temperature, humidity, and other relevant data) which are best suited for each product or piece of equipment and describe conditions under which equipment should not be allowed to run.

3.3 PREVENTATIVE MAINTENANCE

The following information shall be provided for preventive and scheduled maintenance to minimize corrective maintenance and repair:

A. Lubrication data: Provide lubrication data in accordance with these Specifications and the manufacturer' requirements of the respective equipment. Lubrication Information shall include the required lubricants and lubrication schedules. For each required lubricant, provide a list of acceptable equivalents from at least one different major manufacturer whose products are locally available. Provide the following information:

1. A table showing recommended lubricants for specific temperature ranges and applications;

2. Charts with a schematic diagram of the equipment showing lubrication points, recommended types and grades of lubricants, and capacities; and

3. A lubrication schedule showing service interval frequency.

B. Preventive maintenance plan and schedule: Provide manufacturer's schedule for routine preventive maintenance, inspections, tests, and adjustments required to ensure proper and economical operation and to minimize corrective maintenance and repair. Provide manufacturer's projection of preventive maintenance man-hours on a daily, weekly, monthly, and annual basis. Include procedures for disassembly, repair, and assembly, alignment, adjusting, and checking. Supply a table showing the predicted life of parts subject to wear. Provide the Manufacturer's printed operating and maintenance instructions.

3.4 CORRECTIVE MAINTENANCE

A. Manufacturer's recommendations shall be provided on procedures and instructions for correcting problems and making repairs.

1. Troubleshooting guides and diagnostic techniques: Provide step-by-step procedures to promptly isolate the cause of typical malfunctions. Describe clearly why the checkout is performed and what conditions are to be sought. Identify tests or inspections and test equipment required to determine whether parts and equipment may be reused or require replacement.

2. Wiring diagrams and control diagrams: Wiring diagrams and control diagrams shall be point-to-point drawings of wiring and control circuits including factory-field interfaces. Provide a complete and accurate depiction of the actual job-specific wiring and control work. On diagrams, number electrical and electronic wiring and pneumatic control tubing and the terminals for each type identically to actual installation numbering.

3. Maintenance and repair procedures: Provide instructions and list tools required to restore product or equipment to proper condition or operating standards.

4. Removal and replacement instructions: Provide step-by-step procedures and list required tools and supplies for removal, replacement, disassembly, and assembly of components, assemblies, subassemblies, accessories, and attachments. Provide tolerances, dimensions, settings, and adjustments required. Instructions shall include a combination of text and illustrations.

5. Spare parts and supply lists: Provide lists of spare parts and supplies required for maintenance and repair to ensure continued service or operation without unreasonably delays. Special consideration is required for facilities at remote locations. List spare parts and supplies that have a long lead-time to obtain. The spare parts list shall include the name, address, telephone number, and FAX number of authorized repair facilities, address of factory, and location of a local supplier where spare parts are to be obtained.

6. Corrective maintenance man-hours: Provide manufacturer's projection of corrective maintenance man-hours including craft requirements by type of craft. Corrective maintenance that requires participation of the equipment manufacturer shall be identified and tabulated separately.

B. Test results: Provide copies of factory test reports as specified in the applicable equipment section. After field testing is completed, insert field test reports as specified in the equipment section. Include performance curves and engineering data.

3.5 APPENDICES

The following information shall be provided; include information not specified in the preceding paragraphs but pertinent to the maintenance or operation of the product or equipment.

A. Warranty information: List and explain all of the warranties, bonds and service agreements and include the servicing and technical precautions prescribed by the manufacturers or contract documents to keep the warranties in force. Include the proper procedures in event of failure.

B. Personnel training requirements: Provide information available from the manufacturers to use in training designated personnel to operate and maintain the equipment and systems properly. Refer to Section 01675 – Training for additional training information.

C. Testing equipment and special tool information: Provide information on test equipment required to perform specified tests and any special tools needed for the operation, maintenance, and repair of components.

3.6 FIELD CHANGES

Following the acceptable installation and operation of an equipment item, the item's instructions and procedures shall be modified and supplemented by the Contractor to reflect any field changes or information requiring field data.

END OF SECTION

SECTION 01700

CONTRACT CLOSEOUT

PART 1 GENERAL

1.1 DESCRIPTION

This section includes the contract closeout requirements including final cleanup, maintenance and guarantee requirements, preparation and submittal of closeout documents, and post-construction inspection.

1.2 RELATED WORK

A. Section 01670: Equipment System Testing and Startup

B. Section 01675: Training

C. Section 01680: Operation and Maintenance Manuals

1.3 CLOSEOUT TIMETABLE

The Contractor shall establish dates for equipment testing, interim final inspections, and on-site instructional periods (as required under the Contract). These dates shall take into account the interim completion dates noted in the Special Provisions. Such dates shall be established not less than five working days prior to beginning any of the foregoing items, to allow the Owner, the Engineer, and their authorized representatives sufficient time to schedule attendance at such activities. The testing requirements of Section 01670 shall be adhered to.

1.4 FINAL CLEANUP

The Contractor shall promptly remove from the vicinity of the completed work, all rubbish, unused materials, concrete forms, construction equipment, and temporary structures and facilities used during construction. Final acceptance of the work by the Owner will be withheld until the Contractor has satisfactorily complied with the foregoing requirements for final cleanup of the project site.

1.5 MAINTENANCE AND GUARANTEE

A. The Contractor shall comply with the maintenance and guarantee requirements contained in the General Conditions and Supplementary Conditions.

B. Replacement of earth fill or backfill, where it has settled below the required finish elevations, shall be considered required repair work, and any repair or resurfacing constructed by the Contractor which becomes necessary by reason of such settlement shall likewise be considered required repair work.

C. The Contractor shall make all repairs and replacements promptly upon receipt of written order from the Owner. If the Contractor fails to make such repairs or replacements promptly, the Owner reserves the right to do the work and the Contractor and his surety shall be liable to the Owner for the cost thereof.

1.6 BOND

The Contractor shall provide a bond to guarantee performance of the provisions contained in Paragraph “Guaranty” above, and of the General Conditions.

1.7 GUARANTY AND BONDS

The Contractor shall provide the Owner with an executed Guaranty Form and provide specified additional warranties, guarantees, and bonds from manufactures and suppliers.

PART 2 MATERIALS

2.1 CLEANING MATERIALS

As recommended by the manufacturer of surface to be cleaned.

2.2 REPAIR OR REPLACEMENT MATERIALS

Materials used in repairing or replacing surfacing shall be equivalent to the installed surface.

PART 3 EXECUTION

3.1 CLEANING

A. Exterior Cleaning: Sweep paved surfaces; rake other surfaces or grounds.

B. Final Cleaning: Remove all tools, equipment, surplus materials, and rubbish. Refinish surfaces of existing facilities that are marred, scratched, or damaged to match original condition. Remove grease, dirt, stains, foreign materials, and labels from interior and exterior finished surfaces. Do any required waxing and polishing. At time of final inspection, project shall be thoroughly clean and ready for use.

3.2 TESTING AND STARTUP

Provide Owner with all documentation of equipment and system testing and startup in accordance with Section 01670 - Equipment and System Testing and Startup.

3.3 TRAINING

Provide Owner with all documentation of training in accordance with Section 01675 – Training.

3.4 OPERATION AND MAINTENANCE MANUALS

Provide Owner with the final operation and maintenance manuals in accordance with Section 01680 – Operation and Maintenance Manuals.

3.5 PROJECT RECORD DRAWINGS

A. Using red colored pencil, make changes on a set of clean full size drawings. Show all changes and revisions to the original design that affect the permanent structures and will exist in the completed work. Reference underground utilities to semi-permanent or permanent physical objects. Reference water, sewer, telephone, and electric lines to corners of buildings. Show invert elevations at structures, grade changes, valves, and fittings for all pipelines 6-inches in diameter and larger. Include schematic diagrams for all electrical equipment with terminal numbers shown.

B. Keep record drawings current. Inspection will be made monthly and will be required prior to the submittal of Progress Payments. Certification by Contractor of accuracy and completeness will be required on monthly submitted payment requisitions. Project record drawings are the property of the Owner and shall be delivered to the Engineer before closeout.

3.6 SUBSTANTIAL COMPLETION AND FINAL INSPECTION

A. Submit written certification that the project, or a designated portion of the project, is substantially complete, and request, in writing, a final inspection. The Engineer will make an inspection within 10 days of receipt of the request.

B. When the Engineer determines that the work is substantially complete, he will prepare a list of deficiencies that need to be corrected before final acceptance and issue a certificate of Substantial Completion with the deficiencies noted.

C. If the Engineer determines that the work is not substantially complete, he will immediately notify Contractor, in writing, stating reasons. After completing work, the Contractor shall resubmit certification and request a new final inspection.

3.7 ACCEPTANCE OF THE WORK

A. After all deficiencies have been corrected to the satisfaction of the Engineer; a Letter of Final Acceptance will be issued by the Engineer.

B. Acceptance may be given before correction of deficiencies that do not prevent operation and use of the facility; however in such case, an amount equal to twice the Engineer's estimated value of each deficient item or item of remaining work will be withheld until the work is accomplished or the deficiency repaired to the Engineer's satisfaction.

C. Until receipt of Letter of Final Acceptance, Contractor shall be responsible for the work of this Contract.

3.8 OPERATING INSTRUCTIONS

In accordance with Section 01675, after equipment and systems are complete and operating as defined in Section 01670, the Contractor or his suppliers shall, in cooperation with Engineer, instruct Owner personnel how to operate them.

3.9 START-UP/TRAINING

In accordance with Section 01675, The Contractor shall demonstrate systems and instruct Owner personnel in their correct operation. This instruction shall include familiarizing Owner personnel with locations of switches, junction boxes, and circuiting. The Contractor shall have completed all startup and training defined in each individual applicable specification before project closeout.

3.10 CLOSEOUT SUBMITTALS

A. Submit before payment request.

B. Project Record Drawings: As specified above.

C. Written Guarantees and Bonds: As specified in individual sections.

D. Spare Parts, Special Tools, and Materials: As specified in individual sections.

E. Keys and Keying Schedule: Submit all keys including duplicates. Wire all keys for each lock securely together. Tag and plainly mark with lock number or equipment identification, and indicate physical location, such as building and room name or number, or panel or switch number.

F. Operating Handles and Special Tools: Clearly identify as to related equipment.

3.11 CLOSEOUT DOCUMENTS AND SPARE PARTS

Submit the following at least seven (7) days prior to final payment request:

A. Testing and Startup Forms

B. Training documentation

C. Project Record Drawings

D. Operation and Maintenance Manuals

E. Written Guarantees and Bonds: As specified in individual sections.

F. Spare Parts, Special Tools, and Materials: As specified in individual sections.

G. Keys and Keying Schedule: Submit all keys including duplicates. Wire all keys for each lock securely together. Tag and plainly mark with lock number or equipment identification, and indicate physical location, such as building and room name or number, or panel or switch number.

H. Evidence of Payment and Release of Liens and Stop Payment Notices.

3.12 POST-CONSTRUCTION INSPECTION

Before expiration of guaranty period, Engineer will inspect project and notify Contractor in writing of any deficiencies.

END OF SECTION

SECTION 02010

SUBSURFACE CONDITIONS

PART 1 GENERAL

1.1 DESCRIPTION

Crawford and Associates, Inc. prepared a soil investigation report entitled “Geotechnical Report, Union Mine WWTP Headworks Improvements Project, El Dorado County, California”, dated August 2023.

A copy of the report is bound in the back of the Specifications in Appendix A. This report was obtained for the Owner's use in design and construction. Approximate test pit locations and test pit logs included in the reports are for Contractors information, but the report is not a warrant of subsurface conditions.

1.2 ADDITIONAL INFORMATION

Prior to bidding, the Contractor should visit the site and acquaint himself with all existing conditions. Bidders may make their own subsurface investigations to satisfy themselves as to site and subsurface conditions including, but not limited to, soil moisture conditions and current groundwater elevations. Such subsurface investigations shall be performed only under time schedules and arrangements approved in advance by the Owner. Neither the Owner nor its Consulting Design Engineers guarantee the accuracy of the information contained in the Geotechnical Report or any interpretation, deduction, or conclusion given in the report relative to subsurface conditions. Further it shall be the responsibility of the Contractor to satisfy himself of the type of soil and the level of the water table to be encountered during construction of the facilities. The bidder shall make his own deductions and conclusions as to the nature of the materials to be excavated; the difficulties which may arise from the subsurface conditions and of doing any other work affected by the subsurface conditions and shall accept full responsibility therefore.

1.3 QUALITY ASSURANCE

A Geotechnical Engineer will be retained by the Owner to provide testing and inspection of work in connection with excavating, filling, compacting, and grading.

PART 2 MATERIALS

Not used.

PART 3 EXECUTION

Not used.

END OF SECTION

SECTION 02100

DEMOLITION, CLEARING, GRUBBING, AND STRIPPING

PART 1 GENERAL

1.1 DESCRIPTION

Work included: Demolition, clearing, grubbing, and stripping required for this work includes, but is not necessarily limited to:

Removal of weeds, surface rock, and all debris at all locations identified for new construction and new grading and/or site work.

1.2 RELATED WORK SPECIFIED ELSEWHERE

A. Section 02010 – Subsurface Conditions

B. Section 02200 – Earthwork

C. Section 02223 – Trenching, Backfilling, and Compacting

D. Section 02225 – Structure Excavation and Backfill

E. Section 02228 – Blasting

F. Section 02233 – Watering

G. Section 03100 – Concrete

1.3 LIMITS OF WORK

Perform demolition, clearing, grubbing, and stripping operations to the following limits:

A. Demolition: Perform demolition of existing facilities as designated on the contract drawings.

B. Clearing: Perform clearing operations throughout the project site, as required for completion of the work designated on the contract drawings.

C. Grubbing: Perform grubbing operations at all locations identified for clearing.

D. Stripping: Perform stripping operations at all locations identified for demolition, new construction and new grading and/or site work.

1.4 PROJECT CONDITIONS

A. Dust Control: Use all means necessary to prevent the spread of dust during performance of the work; thoroughly moisten all surfaces as required to prevent dust being a nuisance to the public, neighbors, and concurrent performance of other work on the site. Wind in excess of 10 MPH causing dust to leave site will require Contractor to limit dust causing activities.

B. Burning: On-site burning will not be permitted.

C. Protection: Use all means necessary to protect existing objects designated to remain and, in the event of damage, immediately notify the Engineer and make all repairs and replacements necessary for approval by the Engineer at no additional cost to the Owner.

PART 2 MATERIALS

2.1 TEMPORARY BARRICADES

Unless otherwise specifically approved by the Engineer, use only new and solid lumber of utility grade or better to construct temporary barricades around the objects designated to remain.

2.2 PRUNING PAINT

Use only a pruning paint specially formulated for horticultural application to cut or damaged plant tissue and approved by the Engineer for use on this work.

2.3 EXPLOSIVES

Do not use explosives on this work unless approved by the Engineer.

2.4 OTHER MATERIALS

All other material, not specifically described but required for proper completion of the work of this Section, shall be as selected by the Contractor subject to approval of the Engineer.

PART 3 EXECUTION

3.1 PREPARATION

A. Notification: Notify the Engineer at least two full working days prior to commencing the work of this section.

B. Site Inspection

1. Prior to all work of this section, carefully inspect the entire site and all objects designated to be removed and to be preserved. The Drawings do not purport to show all objects existing on the site. Before commencing the work of this section, verify with the Engineer all objects to be removed and all objects to be preserved.

2. Locate all existing inactive utility lines to be encountered by the new work and determine all requirements for disconnecting and capping. Abandonment of piping requires capping at each end or plugging with concrete to the satisfaction of the Engineer.

3. Locate all existing active utility lines traversing the site and determine the requirements for their protection to the satisfaction of the Engineer.

C. Scheduling

1. Schedule all work in a careful manner with all necessary consideration for neighbors, operation of the existing facilities, and the public.

2. Avoid interference with the use of, and passage to and from, adjacent buildings and facilities.

D. Disconnection of Utilities: Before starting site operations, disconnect or arrange for the disconnection of all utility services designated to be removed, performing all such work in accordance with the requirements of the utility company or Owner involved.

E. Protection of Utilities: Preserve in operating condition all active utilities traversing the site and designated to remain.

3.2 STRUCTURE DEMOLITION

A. Facilities so designated on the plans shall be demolished, and all materials there from shall become the property of the Contractor and shall be removed and disposed of away from the site. Any equipment or pipework connected within a structure which is designated to be removed and saved or relocated shall be removed before demolition begins. All other equipment within the structure shall become the property of the Contractor.

B. All concrete and rock shall be removed to a depth of at least 2.5 feet below the finished grade unless otherwise noted and shall be disposed of off-site. Concrete not removed shall be broken to prevent entrapment of water, as directed by the Engineer. Concrete includes all reinforcement and embedded items. Pipework and conduit within 10 feet of a structure shall also be removed to a depth of 2.5 feet below existing grade unless otherwise noted. Existing concrete structures below new structural foundations shall be completely removed.

C. Safety Requirements: The Contractor's attention is directed to the provisions of Subpart T of the OSHA Safety and Health Standards for Construction. The Contractor shall perform all the work hereunder in accordance with said provisions, and where in conflict, the more stringent shall apply.

D. Backfill and Grading: After facilities have been demolished and all material removed, any remaining depression or hole shall be backfilled and the area finish graded as specified in Section 02200. Rubble and broken concrete will not be allowed to be used as fill material.

3.3 ROADWAY DEMOLITION

A. Where shown on the contract drawings, Contractor shall remove entire pavement section including base material. This will also be necessary where deemed by the Engineer that extensive pipe construction has caused a loss of pavement integrity. Base material may be stockpiled and reused where appropriate and only with the approval of the Engineer.

B. Asphalt concrete, concrete curb, and gutter materials to be demolished shall be broken up and removed from the site by the Contractor at no additional cost to the Owner.

3.4 PIPE DEMOLITION

A. Unless otherwise specified, or in conflict with a proposed pipeline or structure, all pipes shown to be demolished shall be abandoned in place and have each end capped with at least a 24-inch long plug of at least class 4 concrete or grout material within the pipe. Piping subject to internal pressure upon abandonment shall be capped with pressure retaining caps or plugs. Pipes below new structural foundations shall be completely removed.

B. All pipe materials to be removed including pipe, fittings, valves, and thrust blocking shall be disposed away from the site by the Contractor at no additional cost to the Owner.

3.5 CLEARING AND GRUBBING

A. Clearing, Grubbing, and Stripping

1. The Contractor shall restrict clearing and grubbing to the areas designated for new construction or adjustment of grades on the plans. Surrounding trees shall be protected from damage.

2. Remove and dispose of trees, snags, stumps, shrubs, brush, limbs, and other vegetative growth to the limits defined in Section 1. 3. Remove all evidence of branches greater than 1-inch in diameter of thickness. Remove and dispose of trash piles and rubbish. Protect structures and piping above and below ground, trees, shrubs, and vegetative growth and fencing which are not designated for removal or which exist outside project limits.

3. Where limbs or roots of trees designated to remain extend into work areas, the limbs or roots shall be trimmed in accordance with the provisions of this section.

4. Remove all surface rocks and all stumps, roots, and vegetation within the limits of construction. Roots shall be removed to at least 2.5 feet below proposed finish grade.

    a. Conventional means shall be used to remove rocks, expect isolated boulders exceeding 5 feet in dimension; these will require special excavation techniques (such as chiseling, air tools or rock splitting).
    b. Non-explosive techniques are required, including ripping, chiseling, drilling, rock-splitting, etc. Blasting excavation is not allowed.

5. After grubbing, strip the organic material to the limits defined in Section 1. 3 to a depth of not less than 2-inches. Upon completion of the stripping operation, the remaining material, if utilized for structural fill, shall not exceed a concentration of organics in excess of 5 percent by dry weight. Dilution shall be accomplished by means of disking.

6. To encourage healthy vegetation, stockpile stripping and topsoil and re-install in locations where hydroseeding or landscaping is required.

B. Felling of Trees

1. Use all necessary care to protect the roots and branches of trees designated to remain, and to prevent damage to persons and properties.

2. Immediately after felling a tree, remove the branches, cut trunk and limbs as necessary for removal, and clear the debris.

C. Trimming of Trees

1. In company with the Engineer, ascertain the limbs and roots which are to be trimmed and clearly mark them to designate the approved point of cutting.

2. Cut evenly, using proper tools and skilled workmen to achieve neat severance with the least possible damage to the tree.

3. Promptly coat the cut area with the approved pruning paint in strict accordance with the manufacturer's recommendations.

4. In the case of root cuts, apply wet burlap or other protection approved by the Engineer, as required, to prevent drying out.

3.6 DISPOSAL OF STRIPPINGS

The stripped materials shall be removed from the project site at no cost to the Owner.

3.7 CONSTRUCTION OF BARRICADES

A. Layout

1. At all trees designated to be preserved, construct a temporary barricade around the tree at the tree's approximate drip line.

2. Make barricades at least three feet high, consisting of two inch by four inch or larger wood posts set at least 18 inches into the ground at not more than six feet on centers, joined at the top by one inch by six inch or larger wood boards firmly nailed to the posts. Metal post with orange safety fencing may also be used if allowed by the local Owner having jurisdiction.

B. Protection

1. Take special care in setting posts to not damage tree roots.

2. Do not permit stockpiling of materials or debris within the barricaded area nor permit the earth surface to be changed in any way except as specifically approved by the Engineer.

C. Maintenance: All protective fencing shall be inspected and maintained by the contractor at weekly intervals. Any damaged fencing shall be restored within one week.

D. Removal of Barricades: All protective fencing including posts and fabric shall be removed from the site at the completion of the work at the Contractor’s expense.

3.8 REMOVAL OF DEBRIS

A. Remove all debris from the site and leave the site in a neat and orderly condition to the approval of the Engineer. Dispose of debris off site at a location approved by the Engineer.

B. Removal of demolished materials shall be included in the applicable lump sum base bid item and shall not be paid on a unit cost basis.

END OF SECTION

SECTION 02140

DEWATERING

PART 1 GENERAL

1.1 SCOPE

The work of this section consists of providing all labor, materials, and equipment necessary to dewater trench and structure excavations. Refer to the Specification Section 02010 – Subsurface Conditions, and the Geotechnical report included at the end of the Specifications.

1.2 RELATED WORK SPECIFIED ELSEWHERE

A. Section 01300 - Submittals

B. Section 02010 - Subsurface Conditions

C. Section 02200 - Earthwork

D. Section 02223 - Trenching, Backfilling, and Compacting

E. Section 02225 - Structure Excavation and Backfill

1.3 SUBMITTALS

A. In accordance with Section 01300.

B. Two weeks prior to installation of dewatering facilities and commencement of excavation, submit:

1. A dewatering plan prepared and stamped by a California Registered Geologist and/or a Certified Hydrogeologist and submitted to the Engineer for approval.

2. Drawings and descriptions indicating numbers, locations, arrangements, depths, capacities, and construction details, as applicable, of all dewatering system equipment and components, including standby equipment and components.

3. Methods of disposal of pumped water.

4. Methods of diverting precipitation and surface water away from excavations.
5. Method for collecting and removing precipitation within excavations as necessary.
6. Copies of executed permits necessary to perform work.

1.4 PERMITS

The Contractor shall obtain and comply with all required permits for the dewatering system and operation, disposal of water, and pay all associated fees.

The Contractor shall be responsible for obtaining coverage under California Regional Water Quality Control Board, Central Valley Region (Central Valley Regional Water Board), Waste Discharge Requirements, Limited Threat Discharges to Surface Water (Order R5-2022-0006, NPDES No. CAG995002), if appropriate, for any dewatering activity, including removal of groundwater, removal of accumulated rainwater or removal of water from cofferdams or diversions resulting in a discharge to a surface water of the United States. Dewatering activities, within the boundary of the Central Valley Regional Water Board, shall comply with the conditions of the Central Valley Regional Water Board Limited Threat General Order, all conditions provided by the Regional Water Board in a Notice of Applicability for coverage under the Limited Threat General Order, and shall be in accordance with Caltrans BMP# NS-2 Dewatering Operations.

Following completion of dewatering activities, the Contractor shall be responsible for filing with the Central Valley Regional Water Board a Request for Termination of Coverage under the Limited Threat General Order.

PART 2 MATERIALS

2.1 FACILITIES AND EQUIPMENT

The Contractor shall provide all necessary facilities and equipment for the dewatering operations.

PART 3 EXECUTION

3.1 GENERAL REQUIREMENTS

A. The Contractor shall have on hand, at all times, sufficient pumping equipment and machinery in good working condition and shall have available, at all times, competent workmen for the operation of the pumping equipment. Adequate standby equipment shall be kept available at all times to insure efficient dewatering and maintenance of dewatering operation during power failure.

B. Dewatering shall commence at an appropriate time prior to commencing excavation, and shall be continuous until facilities and structures are completed, backfilled, and, as appropriate, filled with water to prevent damage from hydrostatic uplift and/or floatation.

C. Excavations extending below site groundwater levels or encountering perched groundwater within permeable soil layers shall be dewatered. Dewatering of narrow trench excavations that penetrate less than a few feet below the groundwater level and do not encounter loose and/or cohesionless soils may be possible by directing inflow to a sump where water can be removed by a pump. Temporary dewatering of wider, deeper, and/or more extensive excavations may require well points, perimeter trench drains, and/or deep sumps. To help maintain bottom stability of wider, deeper, and/or more extensive excavations, groundwater levels shall be drawn-down a minimum of 5 feet below the lowest portion of the excavation.

D. Dewatering shall at all times be conducted in such a manner as to preserve the undisturbed bearing capacity of the subgrade soils at proposed bottom of excavation and protect temporary excavation slope stability during construction. If foundation soils are disturbed or loosened by the upward seepage of water or an uncontrolled flow of water, the affected areas shall be excavated and replaced with drain rock on geotextile fabric at no additional cost to the Owner.

E. Due to the potential for ground settlement attributable to temporary dewatering, the contractor shall survey all existing structures in the vicinity of the proposed dewatering operation, prior to the commencement of the dewatering operation. The contractor shall monitor the existing structures for settlement, both total and differentia, throughout the dewatering operation. A daily report for each structure shall be prepared by the contractor and provided to the Engineer identifying the original baseline elevation; the elevation measured each day, and corresponding total and differential settlement. Modifications to the dewatering program may be necessary, as determined by the Engineer, should dewatering induced settlements be detected.

3.2 DISPOSAL OF WATER

A. The Contractor may dispose of the water into existing drainage courses at the plant site, subject to any applicable permitting to be obtained by the Contractor.

B. The Contractor shall be responsible to design and control the dewatering operations such that disposal of water does not cause erosion or other damage and such that water to be disposed of is free from silt and other objectionable materials. Settling basins and/or other means shall be used as necessary.

C. The Contractor shall utilize applicable construction activity Best Management Practices (BMP) for the project. Refer to "Caltrans Storm Quality Handbooks, Construction Site Best Management Procedures Manual", May 2017 or latest edition. Groundwater discharges are included in Section NS-2.

D. The Contractor shall be responsible for obtaining coverage under the Central Valley Regional Water Board Limited Threat General Order for any dewatering activity, including removal and discharge of groundwater, accumulated rainwater and removing water from cofferdams or diversions, if necessary. Dewatering activities shall comply with the conditions of the Central Valley Regional Water Board Limited Threat General Order and all conditions provided by the Regional Water Board in a Notice of Applicability for coverage under the Limited Threat General Order.

3.3 TERMINATION OF DEWATERING

The termination of dewatering operations shall be performed in such a manner as to maintain the undisturbed state of the natural foundation soils, prevent disturbance of compacted backfill and prevent flotation or movement of structures, pipelines, and sewers. If damage occurs due to improper termination of dewatering, the Contractor is responsible to repair the damage to the satisfaction of the Engineer. Dewatering devices/features shall either be removed or abandoned in place in accordance with legal regulatory requirements and as approved by the Geotechnical Engineer.

END OF SECTION

SECTION 02200

EARTHWORK

PART 1 GENERAL

1.1 DESCRIPTION

The work of this section consists of excavation, filling, compaction, and grading for earthen embankments, facilities pads, roadways, areas adjacent to structures, slope rounding, benching, and removal of unsuitable materials from the roadbed and beneath fill areas.

1.2 RELATED WORK SPECIFIED ELSEWHERE

A. Section 02010 – Subsurface Conditions

B. Section 02100 – Demolition, Cleaning, Grubbing, and Stripping

C. Section 02140 – Dewatering

D. Section 02223 – Trenching, Backfilling, and Compacting

E. Section 02225 – Structure Excavation and Backfill

F. Section 02228 – Blasting

G. Section 02233 – Watering

H. Section 02270 – Stormwater Runoff Control Program

I. Section 02272 – Vegetative Erosion Control

J. Appendix A – Geotechnical Report

1.3 DEFINITIONS

A. Local Borrow: Local borrow consists of approved soil from on-site. Borrow material shall meet the requirements of Engineered fill.

B. Engineered Fill: On-site soil that meets the requirement of Part 2.2. of this section. The engineered fill shall be free (less than 5% by volume) of organic and deleterious materials.

C. Imported Engineered Fill: All imported soil that meets the requirement of Part 2.2. of this section. The engineered fill shall be free of deleterious materials.

D. Lime Treated Soil: On-site soil treated with high calcium quicklime as recommended by the project geotechnical engineer.

E. Non-Engineered Fill: On-site soil that do not meet the requirements of Part 2.2 of this section.

F. On-site Soil: Soil that is selected from the surplus material obtained from on-site excavation.

G. Over-excavation: Over-excavation consists of authorized removal and satisfactory disposal of unsuitable soil located below subgrade surface. The Engineer determines the unsuitability of the soil.

H. Relative Compaction: Relative compaction is defined as the ratio, in percent, of the as-compacted dry density to the laboratory maximum dry density. The laboratory maximum dry density is defined in accordance with ASTM D1557, latest edition. In-place density will be determined in accordance with ASTM D1556 or D6938, latest edition.

I. Subbase: A layer of specified uniform bedding or leveling course between the base of a structure/foundation and subgrade.

J. Subgrade: Surface remaining after completing the excavation or top surface of fill or backfill immediately below subbase or bedding as applicable.

K. Standard Specifications: Where reference is made to Standard Specifications, reference shall mean: State of California, Business and Transportation Agency, Department of Transportation (Caltrans), Standard Specifications, latest edition, excluding measurement and payment items.

L. Well Graded: Well graded as used in this section defines a mixture of soil particle sizes that have no specific concentration or lack thereof of one or more sizes. Well graded is used to help define a material that, when properly compacted, produces a strong and relatively incompressible soil.

1.4 QUALITY ASSURANCE

Testing required to determine compliance for the work of this section will be the responsibility of the Owner and at the Owner's expense. The Contractor shall cooperate by rerouting equipment or by temporarily closing the immediate work area being tested. Areas where test results indicate noncompliance shall be corrected before placing additional fill. Retesting of previously failing test areas will be backcharged to the Contractor in accordance with the Geotechnical Engineer's current rate schedule.

1.5 PROJECT CONDITIONS

Maintain fills, slopes, and ditches within the limits of the new construction until final acceptance. Repair areas damaged as a result of storms or construction. Take necessary precautions to prevent the entrance of soils and other materials into streambeds, lakes, or water courses.

PART 2 MATERIALS

2.1 GENERAL

Material shall be free from detrimental quantities of organic materials and free of all debris, muck, and other unsuitable materials. Frozen material will not be permitted as fill.

2.2 ENGINEERED FILL

A. All engineered fill soils shall be nearly-free (less than 5% by volume) of organic or other deleterious debris and less than 2 inches in maximum dimension.

B. All imported fill materials to be used for engineered fill shall be sampled and tested by the project Geotechnical Engineer prior to being transported to the site.

C. Engineered fill material shall be utilized in the construction of structure backfill, access roadways, facilities pad and all other areas identified on the contract drawings, or as directed by the Geotechnical Engineer. Engineered fill shall meet the following minimum requirements:

Engineered Fill Requirement		Test Procedures	
		ASTM [(a)]	Caltrans [(b)]
Gradation			
Sieve Size	**Percent Passing**		
3 inch	100	D422	202
¾ inch	70-100	D422	202
No. 4	35-100	D422	202
No. 200	10-45	D422	202
Plasticity			
Liquid Limit	**Plasticity Index**		
<30	<15	D4318	204
Organic Content			
Less than 5%		D2974	--
Expansion Potential (ASTM D4829)			
Less than 20%	--	--	--

(a) American Society for Testing and Materials Standards (latest edition).

(b) State of California, Department of Transportation, Standard test Methods (latest edition)

2.3 ONSITE SOIL

A. Fill may consist of onsite soil provided it contains no rocks larger than 2-inches. Fill should be free of debris and vegetation. Place rocks to prevent nesting and voids and in a manner so that soil can be adequately compacted around the rocks. Geotechnical Engineer must observe the placement and compaction of rocky fill material.

B. The onsite soil fill shall be uniformly moisture-conditioned to within 2 percent of the optimum moisture content, placed in horizontal lifts not greater than 8-inches in loose thickness, and compacted per Section 3.4.

2.4 AGGREGATE BASE

Aggregate base shall be Class 2 aggregate base, ¾" maximum as specified in Section 26 of the California Department of Transportation Standard specifications.

2.5 CRUSHED ROCK

Material shall be crushed rock of one-inch (1") maximum size, with no material passing a Number four (#4) sieve.

2.6 DRAIN ROCK

Drain rock shall be Class 1, Type B permeable material as specified in Section 68 of the California Department of Transportation Standard specifications.

2.7 GEOTEXTILE FABRIC

Geotextile fabric used in conjunction with aggregate base as an underlayment for access roadways shall be Propex 2006, Mirafi 600X, or equal. Overlap fabric minimum 1ft. The fabric shall be composed of high-tenacity polypropylene yarns, woven into a stable network to retain relative position. Fabric shall be inert to biological degradation and resistant to naturally encountered chemicals, alkalis, and acids.

Geotextile fabric used in conjunction with crushed rock base or gravel beneath structures shall be Mirafi 140N, Propex Geotex 401, Propex 4551, Reed and Graham RG60N, or equal. Overlap fabric minimum 1ft. Fabric shall be non-woven geotextile composed of polypropylene fibers, formed into a stable network of fibers retaining their relative position. The fabric shall be inert to biological degradation and resistant to naturally encountered chemicals, alkalis, and acids.

2.8 WATER FOR COMPACTION/DUST CONTROL

Water for compaction and dust control shall be clean and free of oil, acids, salts, and other deleterious substances. Water shall be supplied by the Contractor at no additional expense to the Owner. Reclaimed water may be obtained on site from the treatment plant per specification Section 02233 – Watering, at no cost to the Contractor. The Contractor shall coordinate with the Engineer for the use of this water, shall provide all necessary labor and equipment to extract the water, and shall be responsible for the repair of any damage to the existing facilities that can be attributed to this operation.

2.9 IMPORTED MATERIAL ACCEPTANCE

All tests necessary for the Contractor to locate acceptable imported material shall be made by the Contractor. Certification that the material conforms to the Specification requirements along with copies of the test results from a qualified commercial testing laboratory shall be submitted to the Engineer for approval at least 30 days before the materials is required for use. All aggregate samples shall be furnished by the Contractor, at the Contractor's sole expense. Samples shall be representative and be clearly marked to show the source of the material and the intended use on the project. Sampling of the aggregate source shall be done by the Contractor under the supervision of the Engineer in accordance with ASTM D75. Tentative acceptance of the aggregate source shall be based on an inspection of the source by the Engineer and the certified test results submitted by the Contractor to the Engineer. No imported materials shall be delivered

to the site until the proposed source and materials tests have been tentatively accepted in writing by the Engineer.

Final acceptance will be based on the tests made on samples of material taken from the completed and compacted course. The completed course is defined as a course or layer that is ready for the next layer or the next phase of construction. All testing for final acceptance shall be performed by the Engineer.

If tests conducted by the Contractor or the Engineer indicate that the material does not meet Specification requirements, material placement will be terminated until corrective measures are submitted and accepted by the Engineer. Material which does not conform to the Specification requirements and is placed in the work shall be removed and replaced at the Contractor's sole expense. Sampling and testing performed by the Contractor shall be done at the Contactor's sole expense. Retesting of failed test sections performed by the Engineer will be charged to the Contractor in accordance with the Geotechnical Engineer's current rate schedule.

2.10 DUST CONTROL

A. Dust Control: Use all means necessary to prevent the spread of dust during performance of the work; thoroughly moisten all surfaces as required to prevent dust being a nuisance to the public, neighbors, and concurrent performance of other work on the site. Wind in excess of 10 MPH causing dust to leave site will require Contractor to limit dust causing activities.

2.11 NATURALLY OCCURRING ASBESTOS

A. The project site as mapped by the California Geological Survey in Special Report 2000-02 (and updated review area map from 2015) contains areas of both moderately and most likely to contain NOA.

B. The project site is subject to the requirements of Section 93105 of the California Code of Regulations, Asbestos Airborne Toxic Control Measure for Construction, Grading, Quarrying and Surface Mining Operations.

C. Prior to the approval of the grading/improvement plans, the following must be complete:

1. The Contractor shall prepare an Asbestos Dust Mitigation Plan pursuant to CCR Title 17 Section 9305 ("Asbestos Airborne Toxic Control Measures for Construction, Grading, Quarrying, and Surface Mining Operations") and EDCAQMD Rule 223-2 and obtain approval by the El Dorado County Air Quality Management District (EDCAQMD). The Plan shall include all measures required by the State of California and the EDCAQMD.
2. If asbestos is found in concentrations greater than 5 percent, the material shall not be used as surfacing material as stated in California regulation CCR Title 17 Section 93106 ("Asbestos Airborne Toxic Control Measure-Asbestos Containing

Serpentine"). The material with naturally-occurring asbestos can be reused at the site for subgrade material covered by other non-asbestos-containing material.

PART 3 EXECUTION

3.1 GENERAL

The Contractor shall do all grading, filling-in or excavating as required to completely grade the site to lines and grades shown, and to provide for the indicated drainage. Where finish grade corresponds practically with existing grade, the ground shall be worked-up and graded-off evenly with existing grade.

3.2 STRIPPING

Perform clearing, grubbing, and stripping in accordance with Section 02100.

3.3 ORIGINAL GROUND PREPARATION

Perform all excavation of every description, regardless of the type, nature, or condition of material encountered as specified, shown on the contract drawings, or required to accomplish the construction.

A. Over-Excavation: The contractor will be responsible for over-excavation. The zone of over-excavation shall extend laterally a minimum of 2 feet outside the limits of the structure and 2.5 feet below the bottom of the slab.

B. Scarification and Recompaction: Following site stripping, grubbing, and any required over-excavation, areas to receive engineered fill or concrete slabs supported-on-grade shall be scarified to a depth of 8 inches, uniformly moisture-conditioned to within 2 percent of optimum moisture content, and compacted to at least 95 percent relative compaction. Scarification and recompaction may not be necessary if weathered rock is present as determined by the Geotechnical Engineer. Within pavement areas (asphaltic cement and concrete) the subgrade shall be scarified to a minimum depth of 8 inches and compacted to at least 95 percent relative compaction**.**

C. If the Contractor excavates below the required grade by chance, the Contractor shall fill the over-excavation at no cost to the Owner. If the Geotechnical Engineer directs the Contractor to perform over-excavation, the excess excavation and fill will be paid for as extra work.

3.4 GENERAL FILL COMPACTION

Soils used for engineered fill shall be uniformly moisture-conditioned within 2 percent of optimum moisture content and placed in 8-inch maximum loose lifts. Unless otherwise noted on the drawings, compaction shall be as follows:

Area	Relative Compaction
Backfill & Earth Pads	95%
Beneath Structures	95%
Upper 6 inches of pavement subgrade	95%
Fill deeper than 10 feet	95%
Landscape Areas	90%

If the fill is not testable due to amount of rock, as determined by the Geotechnical Engineer, place fill in maximum 8" lifts, moisture condition to within 2% of optimum then compact with a minimum 10 passes of a Caterpillar 825 sheepsfoot compactor or equivalent to achieve 95% compaction.

3.5 REMOVAL OF WATER

Provide and operate equipment adequate to keep all excavations and trenches free of water. Remove all water during periods when pipe is being laid, during the placing of backfill, and at such other times as required for efficient and safe execution of the work. Avoid settlement or damage to adjacent property. Dispose of water in a manner that will not damage adjacent property. When dewatering open excavations, dewater from outside the structural limits and from a point below the bottom of the excavation when possible. Water disposal shall meet all Federal, State, and local requirements. Construction dewatering shall be in accordance with Section 02140.

3.6 MOISTURE CONTROL

During compaction operations, maintain optimum practicable moisture content required for compaction purposes in each lift of the earth fill. Maintain moisture content uniform throughout the lift. Insofar as practicable, add water to the material at the site of excavation. Supplement, if required, by sprinkling the earth fill. If the moisture content of the earth fill cannot be lowered to within the specified limit by aeration in a reasonable length of time, the Contractor shall import fill with which the specified moisture content can be achieved. At the time of compaction, the water content of the material shall be within the optimum water content range for the material being used.

Do not compact fill material which contains excessive moisture to obtain the required compaction. Aerate the material by blading, discing, harrowing, or other methods, to hasten the drying process.

3.7 COMPACTION TESTS

The Geotechnical Engineer will determine in-place density and moisture content by any one or combination of the following methods: ASTM D3017 or D2922. The Contractor will cooperate with this testing work by excavating and leveling small test areas as designated by the Geotechnical Engineer. Tests in which either the moisture content requirements are not achieved or yield relative compaction results below the required minimum compaction requirements will constitute failure. Areas failing to meet the specified moisture content limits and/or minimum specified relative compaction shall be immediately reworked until such time as the minimum compaction requirements are achieved. Re-testing of previously failing test areas will be backcharged to the Contractor in accordance with the Geotechnical Engineer's current rate schedule.

3.8 SITE GRADING

Perform all earthwork to the lines and grades as shown and/or established by the Engineer. Shape, trim, and finish slopes of channels to conform with the lines, grades, and cross sections shown. Make slopes free of all exposed roots and stones exceeding 2-inches in diameter.

3.9 DISPOSAL OF EXCESS EXCAVATION

A. Dispose of all excess excavated materials, which meet the requirements for non-engineered fill, in the area and graded as designated on the construction drawings or as directed by the Engineer. Material shall be placed level or sloped and compacted at 90% relative compaction as directed by the Engineer, at no cost to the Owner. If disposal location is not specifically identified on the drawings, haul and dispose all excess excavated materials off site, at no additional expense to the Owner.

3.10 DITCHES

Construct drainage swales, ditches, and inlet and outlet ditches for culverts as shown or as directed. Trim ditch slopes neatly to line. Final flow line grade shall be reasonably uniform to provide free drainage without puddling. Ditches shall be over-built where puddling is anticipated. The slope of all ditches shall be trimmed to leave a smooth and compacted surface. Surfaces trimmed with a backhoe are unacceptable.

3.11 SLOPE FINISHING

Fill slopes shall be over-built and cut back into firm material to finish grade.

3.12 PLACEMENT OF CRUSHED ROCK OR GRAVEL

Where crushed rock or gravel base is required, envelope the rock or gravel with geotextile fabric.

3.13 EROSION AND SEDIMENT CONTROL

The site shall be protected from erosion and sediment transport at all times utilizing a combination of best management practices (BMP) as identified below.

A. Temporary Erosion and Sediment Control: Stormwater BMPs shall be employed in a system such that erosion and sediment transport shall be significantly minimized from unprotected earthwork activities. Refer to Section 02270 – Stormwater Runoff Control Program. Track walking shall be utilized on all embankment slopes. Specification section 02272 – Vegetative Erosion Control – specifies proper hydroseed and mulching techniques, which shall be utilized on all non-traffic embankment slopes of new ponds/basins. Refer to the contract drawings and the Stormwater Pollution Prevention Plan (SWPPP) figures for specific BMP types and locations. BMPs such as hydro-seeded vegetative erosion control may be suitable temporary BMPs if appropriate measures are made (i.e., proper application of tackifier/soil binder).

B. Permanent Erosion and Sediment Control: The permanent stormwater BMPs shall be employed in a system such that erosion and sediment transport shall be significantly minimized from unprotected earthwork activities. Specification section 02272 describes the use of hyrdoseed, mulch, tackifier/soil binder, and erosion control blankets. Refer to the contract drawings for location of all drainage ditches, desilting/ sedimentation basins, asphalt concrete roads, landscaped areas, and graveled areas.

END OF SECTION

SECTION 02223

TRENCHING, BACKFILLING, AND COMPACTING

PART 1 GENERAL

1.1 DESCRIPTION

The work of this section consists of trenching and backfilling for the construction and installation of pipelines, conduits and cables. All trenching will be open cut, unless otherwise approved in writing. It includes all clearing and grubbing, trenching or tunneling, construction of cribbing and cofferdams, dewatering, incidental work, and providing specified backfill.

1.2 RELATED WORK SPECIFIED ESLEWHERE

A. Section 01300: Submittals

B. Section 01666: Testing of Pipelines, Gravity Sewer Lines, and Manholes

C. Section 02010: Subsurface Conditions

D. Section 02100: Demolition, Clearing, Grubbing, and Stripping

E. Section 02200: Earthwork

F. Section 02229: Utility Line Marking

G. Section 02233: Watering

H. Section 02270: Stormwater Runoff Control Program

I. Section 02513: Asphalt Concrete Paving

J. Section 03100: Concrete

K. Section 10400: Identifying Devices

L. Section 15010: General Process and Onsite Utility Piping Provisions

M. Section 16050: General Electrical

N. Appendix A: Geotechnical Report

1.3 SUBMITTALS

A. Submit six copies of a report from a testing laboratory verifying that material conforms to the specified gradations of characteristics for granular material, imported sand, rock refill for foundation stabilization, and water.

B. Submit method of compaction in pipe zone including removal sequence of shoring where used.

C. Provide written description of barricading, shoring, cribbing, bracing, and sloping precautions.

1.4 PROJECT CONDITIONS

A. Obtain all required permits and licenses before installing utilities under existing roads, other than County roads, and follow the rules and requirements of the authority having jurisdiction.

B. Arrange construction sequences to provide the shortest practical time that the trenches will be open to avoid hazard to the treatment plant staff, subcontractors, and public, and to minimize the possibility of trench collapse.

1.5 ROCK EXCAVATION

Rock excavation is anticipated on this project. Please see the Special Provisions for the definition of rock excavation as it pertains to extra work.

A. Conventional means shall be used to remove rocks, expect isolated boulders exceeding 5 feet in dimension; these will require special excavation techniques (such as chiseling, air tools or rock splitting).

B. Non-explosive techniques are required, including ripping, chiseling, drilling, rock-splitting, etc. Blasting excavation is not allowed.

1.6 TESTING FOR COMPACTION

A. The Contractor will test for compaction at locations determined by the Owner.

B. Relative compaction is defined as the ratio, in percent, of the as-compacted dry density to the laboratory maximum dry density. The laboratory maximum dry density is defined in accordance with ASTM D1557, latest edition. As-compacted dry density will be determined in accordance with ASTM D3017 or D2922, latest edition.

C. Where compaction tests indicate a failure to meet the specified compaction, the Contractor will take additional tests every 10 feet in each direction until the extent of the failing area is identified. Rework the entire failed area until the specified compaction has been achieved.

1.7 STREET ZONE

The street zone includes the asphalt concrete and aggregate base pavement section placed over the trench backfill.

1.8 TRENCH ZONE

The trench zone includes the portion of the trench from the top of the pipe zone to the bottom of the street zone in paved areas or to the existing surface in unpaved areas.

1.9 PIPE ZONE

The pipe zone shall include the full width of trench from the bottom of the pipe or conduit to a horizontal level above the top of the pipe, as shown on the contract drawings. Where multiple pipes or conduits are placed in the same trench, the pipe zone shall extend from the bottom of the lowest pipes to a horizontal level above the top of the highest or topmost pipe.

1.10 PIPE BASE OR BEDDING

The pipe base or bedding shall be defined, unless noted otherwise on the Drawings, as a minimum 6-inches thick layer of material immediately below the bottom of the pipe or conduit and extending over the full trench width in which the pipe is bedded.

PART 2 MATERIALS

2.1 ENGINEERED FILL (TYPE 1)

Engineered fill shall consist of excavated native or imported material conforming to requirements of Section 02200.

2.2 IMPORTED SAND (TYPE 2)

Imported washed sand used for the pipe bedding, conduit and pipe zones shall be free of clay or organic material and have the following gradation:

Sieve Size	Percent Passing by Weight
3/8-INCH	100
No. 4	90 – 100
No. 30	12 – 50
No. 100	5 – 20
No. 200	0 – 5

Imported sand shall have a sand equivalent not less than 28 per ASTM D 2419.

2.3 CLASS 2 AGGREGATE BASE (TYPE 3)

Backfill material consisting of Class 2 Aggregate Base in accordance with Caltrans Standard Specifications Section 26-1.02. Recycled material such as recycled concrete or recycled ashaltic concrete shall not be used, unless approved by the Engineer.

2.4 IMPORTED PEA GRAVEL (TYPE 4)

Not used.

2.5 ¾-INCH CRUSHED ROCK (TYPE 5)

Crushed rock base and gravel are defined as natural or crushed rock, free from organic matter, and meeting the following gradation:

Sieve Size	Percent Passing by Weight
1 -inches	100
¾ -inch	90 – 100
3/8”	20 - 55
No. 4	0 – 10
No. 8	0 – 5

Durability Index shall be at least 40 per California Test Method No. 229 or ASTM D3744.

2.6 CEMENT SLURRY (TYPE 6)

Cement slurry backfill materials shall be according to Caltrans Standard Specification Section 19-3.062 and shall consist of cement, fine aggregate/sand and sufficient water for workability. It

shall contain at least 188 lbs cement for each cubic yard of material. Slurry shall be thoroughly machine-mixed and shall be placed with one hour after initial mixing.

2.7 BACKFILL MATERIAL SCHEDULE (FOR PLACEMENT)

Unless otherwise call out on the plans, backfill materials shall be provided according to the following schedule:

Location	Material
Street Zone	Class 2 AB (Type 3)
Trench Zone	Engineered/Native Fill (Type 1) Class 2 AB (Type 3)
Pipe Zone	Imported Sand (Type 2) Class 2 AB (Type 3)
Bedding	Imported Sand (Type 2) Class 2 AB (Type 3)

2.8 REFILL FOR FOUNDATION STABILIZATION

Loose materials at trench bottoms resulting from excavation disturbances should be removed to firm soil. If soft, loose or unstable areas are encountered these areas should be over-excavated to a firm base or a depth of 2 feet. Refill consists of materials for filling the over excavation as approved by the Geotechnical Engineer. Refill shall meet the material requirements specified for pipe zone. As an alternative, crushed rock, enveloped in geotextile fabric may be utilized subject to the approval of the Geotechnical Engineer.

2.9 CONCRETE FOR PIPE ENCASEMENT AND THRUST BLOCKS

A. Concrete for pipe encasement and thrust blocks shall be per Section 03100, unless otherwise shown in the drawings.

B. Thrust blocks are not allowed on site.

2.10 WATER FOR COMPACTION

Water for compaction shall be clean and free of oil, acids, salts, and other deleterious substances. Water shall be supplied by the Contractor at no additional expense to the Owner. Water shall be available as defined in Specification Section 02233. The Contractor shall coordinate with the Engineer for the use of the water shall provide all necessary labor and equipment to extract, transport and apply the water for compaction, and shall be responsible for the repair of any damage to the existing facilities which can be attributed to this operation.

2.11 COFFERDAM AND CUTOFF COLLARS

For steep trenches, provide concrete cut-off collar to prevent surface and groundwater concentration and erosion. For trench slopes over 10%, install concrete cut-off collar at intervals no more than 100-feet (on center). For trench slopes over 15%, install concrete cut-off collar at intervals no more than 50-feet (on center).

PART 3 EXECUTION

3.1 COMPACTION REQUIREMENTS

Unless otherwise shown in the drawings or otherwise described in the specifications for the particular type of pipe installed, relative compaction in pipe trenches shall be as follows:

A. Pipe Base: 95% relative compaction.

B. Pipe Zone: 95% relative compaction.

C. Backfill in Trench Zone not Beneath Paving or Aggregate Base Access Roadways: 90% relative compaction.

D. Backfill in Trench Zone to Street Zone in Paved Areas or Within Limits of Aggregate Base Roadways: 95% relative compaction.

E. Backfill in Street Zone in Paved Areas or within Limits of Aggregate Base Roadways: 95% of relative compaction.

F. Refill for Foundation Stabilization: 95% relative compaction.

G. Refill for Overexcavation: 95% relative compaction.

H. Where compaction tests indicate a failure to meet the specified compaction, the Contractor will take additional test every 10 feet in each direction until the extent of the failing area is identified. Rework the entire failed area until the specified compaction has been achieved.

3.2 MATERIAL REPLACEMENT

Remove and replace any trenching and backfilling material which does not meet the specifications, at the Contractor’s expense..

3.3 SLOPING, SHEETING, SHORING, AND BRACING OF TRENCHES

Trenches shall have sloping, sheeting, shoring, and bracing conforming with 29CFR1926, Subpart P – Excavations, CAL/OSHA requirements, and the General Conditions.

3.4 SIDEWALK, PAVEMENT, AND CURB REMOVAL

Cut bituminous and concrete pavements regardless of the thickness and curbs and sidewalks prior to excavation of the trenches with a pavement saw or pavement cutter. Width of the pavement cut shall be at least equal to the required width of the trench at ground surface plus 6-inches past each side of the trench. Haul pavement and concrete materials from the site. Do not use for trench backfill.

3.5 TRENCH WIDTHS

Trench widths in the pipe zone shall be as shown in the drawings. If no details are shown, the maximum width shall be 24 inches greater than the pipe outside diameter. Comply with 29CFR Part 1926 Subpart P – Excavations. Trench width at the top of the trench will not be limited except where width of excavation would undercut adjacent structures and footings. In such cases, width of trench shall be such that there is at least two feet between the top edge of the trench and the structure or footing.

3.6 TRENCH EXCAVATION

Excavate the trench to the lines and grades shown in the drawings with allowance for pipe thickness, sheeting and shoring if used, and for pipe base or special bedding. If the trench is excavated below the required grade, refill any part of the trench excavated below the grade at no additional cost to the Owner with foundation stabilization material. Place the refilling material over the full width of trench in compacted layers not exceeding 6-inches deep to the established grade with allowance for the pipe base or special bedding.

3.7 DEWATERING

A. Provide and maintain means and devices to remove and dispose of all water entering the trench excavation during the time the trench is being prepared for the pipelaying, during the laying of the pipe, and until the backfill at the pipe zone has been completed. These provisions shall apply at all times during construction, including the noon hour as well as overnight. Dispose of the water in a manner to prevent damage to adjacent property and in accordance with regulatory agency requirements. Do not drain trench water through the pipeline under construction. Do not allow groundwater to rise around the pipe until jointing compound has set hard.

B. Dewater in accordance with Section 02140.

3.8 LOCATION OF EXCAVATED MATERIAL

A. During trench excavation, place the excavated material only within the working area. Do not obstruct any roadways or streets. Conform the federal, state, and local codes governing the safe loading of trenches with excavated material. All trenches shall be backfilled at the end of each day's operation.

B. Until permanent AC paving can be replaced, the Contractor shall backfill the trench to grade and maintain the subgrade and surface in a condition that is suitable to support and safely carry traffic. New AC paving shall be placed within one (1) week after backfilling and trench, unless otherwise approved by the Engineer.

3.9 LENGTH OF OPEN TRENCH

At no time shall the length of open trench exceed 100 feet in advance of pipelaying or amount of pipe installed in one working day, whichever is less, and not more than 100 feet in the rear of pipelaying, except as modified by encroachment permit requirements.

A. At the end of each working day, the entire trench shall be backfilled to match existing surface. The length of open trench which may be left unattended overnight shall be limited to 20 feet or one pipe length, whichever is shorter.

B. For any section of trench that will be left unattended the Contractor shall:

1. Isolate the trench from unauthorized access with rigid barricades and/or temporary fencing and clearly mark and delineate it with warning signs, reflective cones, and warning lights.

2. If within the street right-of-way, plate the trench using trench plates and provide sheeting shoring and bracing to support the trench plates sufficient to carry H-20 traffic loads. Applicable state, county, and municipal traffic safety rules will govern installation and maintenance of trench plates.

3.10 TRENCH EXCAVATION IN BACKFILL AND EMBANKMENT AREAS

Construct trench excavation for pipe, pipes, or conduit in backfill or embankment areas in accordance with the following procedures:

A. Construct and compact the embankment to an elevation of 1-foot minimum over the top of the layer of the largest pipe or conduit to be installed.

B. Excavate trench in the compacted backfill or embankment. Place cement slurry in the pipe base and pipe zone. Compact backfill above the pipe zone to the relative compaction required for trench zone backfill.

3.11 FOUNDATION STABILIZATION

A. After the required excavation has been completed, the Owner will inspect the exposed subgrade to determine the need for any additional excavation. It is the intent that additional excavation be conducted in all areas within the influence of the pipeline where unacceptable materials exist at the exposed subgrade. Overexcavation shall include the removal of all such unacceptable materials that exists directly beneath the pipeline to the required trench width and to the depth required. Backfill the trench to subgrade of pipe base with refill material for foundation stabilization. Place the foundation stabilization material over the full width of the trench and compact in layers not exceeding 6-inches deep to the required grade. Foundation stabilization work shall be executed in accordance with a change order.

B. Refill used by the Contractor for his convenience will not receive any additional payment.

3.12 INSTALLING BURIED PIPING

A. Backfill per the detailed piping specification for the particular type of pipe and per the following.

B. Handle pipe in such a manner as to avoid damage to the pipe. Do not drop or dump pipe into trenches under any circumstances.

C. Inspect each pipe or fitting prior to placing into the trench. Inspect the interior and exterior protective coatings. Patch damaged areas in the field with material recommended by the protective coating manufacturer. Clean ends of pipe thoroughly. Remove foreign matter and dirt from inside of pipe and keep clean during and after installation.

D. All pipelines indicates in the construction drawings shall be properly identified using the following methods:

1. Install locator tape in accordance with details specified in Section 02229.
2. Furnish and install colored pipe (applicable to PVC pipe only) – Potable Water/Blue, Reclaimed Water/Purple, Sanitary Sewers/Green, White may be used only with prior approval of the Engineer.
3. Locator wire shall be installed in accordance with details specified in Section 02229.
4. Alternate systems for marking water pipelines may only be used with prior approval of the Engineer.

E. Grade the bottom of the trench to the line and grade to which the pipe is to be laid, with allowance for pipe thickness and bedding depth. Remove hard spots that would prevent a uniform thickness of bedding. Place the specified thickness pipe base material over the full width of trench. Grade the top of the pipe base ahead of the pipelaying to provide firm, continuous, uniform support along the full length of pie, and compact to the relative

compaction specified herein. After laying each section of the pipe, check the grade and alignment and correct any irregularities prior to laying next joint.

F. Excavate bell holes at each joint to permit proper assembly and inspection of entire joint. Fill the area excavated for the joints with the bedding material specified or detailed in the drawings.

G. Install cofferdams and concrete cutoff collars are required to prevent erosion and water movement.

H. When installing pipe, do not deviate more than 1-inch from line or 1/4 –inch from grade. Measure elevation at the pipe invert. The Contractor shall verify pipe grade at not more than 50 feet intervals, in the presence of the Owner's Representative.

I. After pipe has been bedded, place pipe zone material simultaneously on both sides of the pipe, in maximum 6-inch lifts, keeping the level of backfill the same on each side. Carefully place the material around the pipe so that the pipe barrel is completely supported and that no voids or compacted areas are left beneath the pipe. Use particular care in placing material on the underside of pipe to prevent lateral movement during subsequent backfilling.

J. For pipe sizes greater than 12-inches in diameter, no more backfill material than the lesser of 6-inches or 1/3rd of the pipe diameter shall be placed prior to shovel slicing. Sufficient care shall be taken to prevent movement of the pipe during shovel slicing. Shovel slicing shall be witnessed by the Field Inspector and/or Engineer.

K. Compact each lift to the relative compaction specified herein.

L. Push the backfill material carefully onto the backfill previously placed in the pipe zone. Do not permit free fall of the material until at least 2 feet of cover is provided over the top of the pipe. Do not drop sharp, heavy pieces of material directly onto the pipe or the tamped material around the pipeline. Do not operate heavy equipment over the pipe until at least 3 feet of backfill has been placed and compacted over the pipe.

M. When pipelaying is not in progress, including the noon hours, close the open ends of pipe. Do not allow trench water, animals, or foreign material to enter the pipe.

N. Remove and dispose of all water entering the trench during the process of pipelaying. Keep the trench dry until the pipelaying and jointing are completed.

3.13 BACKFILL COMPACTION

Compact per the detailed piping specification for the particular type of pipe and per the following:

A. Compact trench backfill to the specified relative compaction. Compact by using mechanical compaction or hand tamping. Do not use high impact hammer-type or heavy equipment except where the pipe manufacturer warrants in writing that such use will not damage the pipe. Ponding or jetting is not allowed.

B. Compact material placed within 12-inches of the outer surface of the pipe by hand tamping and/or small hand held tamping equipment.

C. Do not use any axle-driven or tractor-drawn compaction equipment within 5 feet of building walls, foundations, or other structures.

3.14 CEMENT SLURRY BACKFILL

When cement slurry backfill is utilized, pipe shall be supported by mounding imported backfill material or sandbags filled with imported backfill material. Pipe shall not be supported on wooden or concrete blocks.

END OF SECTION

SECTION 02225

STRUCTURE EXCAVATION AND BACKFILL

PART 1 GENERAL

1.1 DESCRIPTION

The work of this section consists of all structure excavation and backfill required to complete the work, including rock excavation, furnishing select or imported backfill, and disposal of surplus or unsuitable material.

1.2 RELATED WORK SPECIFIED ELSEWHERE

A. Section 01300 – Submittals

B. Section 02010 – Subsurface Conditions

C. Section 02100 – Demolition, Clearing, Grubbing and Stripping

D. Section 02140 – Dewatering

E. Section 02200 – Earthwork

F. Section 02233 – Watering

G. Section 02270 – Stormwater Runoff Control Program

H. Section 02400 – Dewatering

I. Appendix A – Geotechnical Report

1.3 QUALITY ASSURANCE

Evaluation of all fill materials and testing required to determine compliance for the work of this section will be the responsibility of the Contractor and at the Contractor's expense. Areas where test results indicate noncompliance shall be corrected before placing additional backfill.

1.4 PROJECT CONDITIONS

Take necessary precautions to prevent the entrance of soils and other materials into streambeds, lake, or other water sources.

1.5 RELATIVE COMPACTION TEST

A. The Owner shall test for compaction at locations determined by the Engineer.

B. Relative compaction is defined as the ratio, in percent, of the as-compacted dry density to the laboratory maximum dry density. The laboratory maximum dry density is defined in accordance with ASTM D1557, latest edition. As-compacted dry density is defined in accordance with ASTM D3017 or D2922, latest edition.

C. Where compaction tests indicate a failure to meet the specified compaction, the Contractor will take additional tests every 50 feet in each direction until the extent of the failing area is identified. Rework the entire failed area until the specified compaction has been achieved at no cost to the Owner.

PART 2 MATERIALS

2.1 IMPORTED NON-EXPANSIVE BACKFILL

Engineered Fill Requirement		**Test Procedures**	
		ASTM [(a)]	**Caltrans [(b)]**
Gradation			
Sieve Size	**Percent Passing**		
3 inch	100	D422	202
¾ inch	70-100	D422	202
No. 4	35-100	D422	202
No. 200	10-45	D422	202
Plasticity			
Liquid Limit	**Plasticity Index**		
<30	<15	D4318	204
Organic Content			
Less than 5%		D2974	--
Expansion Potential (ASTM D4829)			
Less than 20%	--	--	--

(a) American Society for Testing and Materials Standards (latest edition)

(b) State of California, Department of Transportation, Standard test Methods (latest edition)

2.2 CRUSHED ROCK

See Section 02200 for Material Requirements.

2.3 AGGREGATE BASE

See Section 02200 for Material Requirements.

2.4 DRAIN ROCK

See Section 02200 for Material Requirements.

2.5 DRAIN ROCK FABRIC

See Section 02200 for Material Requirements.

2.6 ENGINEERED FILL

See Section 02200 for Material Requirements.

PART 3 EXECUTION

3.1 CLEARING

Perform clearing operations in accordance with Section 02100.

3.2 STRUCTURAL EXCAVATION

A. General: All excavation for structures shall be done levels specified herein (unless noted otherwise on the drawings). The Contractor shall over-excavate laterally a minimum of 2 feet outside the limits of the structure and 2.5 feet below the bottom of the slab.

1. The exposed soil surface at the bottom of the excavated areas must be reviewed by the Geotechnical Engineer to evaluate if any loose or soft zones are present that will require additional excavation.

B. Under all structures with footings below grade (headworks, aerated grit tank, classifier, and septage drain pump station), the Contractor shall:

1. Over-excavate; the zone of over-excavation shall extend laterally a minimum of 2 feet outside the limits of the structure and 2.5 feet below the bottom of the slab.

2. Scarify the over-excavated subsurface a minimum depth of 8-inches, bring the moisture content to 2 percent of optimum and compact to 95 percent minimum relative compaction.

3. For uniform base and leveling course below structures with 6-inches of class 2-AB, refer to Section 02200.

4. At grade or near grade structures are covered in Part 3.3 of this section.

C. Under all pavements, the Contractor shall:

1. Excavate to below subgrade, remove and dispose of organic material and unsuitable soils.

2. Scarify the surface a minimum depth of 8-inches, bring the moisture content to 2 percent above optimum and compact between 95 percent relative compaction.

3. Compact upper 12 inches of pavement subgrade to at least 95% relative compaction.

4. For class 2 aggregate base thickness, refer to Section 02513 Asphalt Concrete Paving.

D. Excavation shall be made to such width outside the lines of the structure to be constructed therein as may be required for proper working methods, the erection of forms and the protection of the work. Care shall be taken to preserve the foundation surfaces shown on the drawings in an undisturbed condition. If the Contractor excavates or disturbs the foundation surfaces shown on the drawings or specified herein without written authorization of the Engineer, the Contractor shall replace at his expense such foundations with compacted gravel foundation fill or other material approved by the Engineer in a manner which will show by test an equal bearing strength with the undisturbed foundation material at no cost to Owner.

E. Bracing, Sheeting, and Shoring: Care shall be exercised in excavating for lower footings not to disturb bearing under higher adjacent footings or structures. Existing structures and pipework shall be adequately braced and cared for so that no damage will result. The Contractor shall submit structural calculations and drawings stamped and signed by a civil or structural engineer registered in the State of California showing members, connections, and anchorage of the proposed bracing, sheeting, and shoring. All bracing, sheeting, and shoring shall conform to CAL/OSHA requirements. The Contractor shall provide suitable sheeting and shoring, where necessary, for protection of the excavations. All such sheeting and shoring shall be removed unless otherwise specifically authorized.

F. Unsuitable Materials: To suit field conditions, excavation below the depths shown may be ordered, but changes may only be made as directed by the Engineer. Soft, spongy, or unsuitable bearing material of any kind shall be entirely removed down to solid bearing soil and replaced with an engineered fill that meets the requirements of Table 2.1 of Section 02200 Earthwork. In such event only the excess excavation and fill will be paid for as extra work.

G. Dewatering: Any water that may be encountered or that may accumulate in excavations shall be removed and kept out by pumping or other approved methods, and all construction shall be carried on in the dry. Water shall be kept down until structures are complete to above water, safe from uplift and horizontal water pressure and the backfill has been placed. Dewatering shall be in accordance with Section 02140.

H. Approval of Excavation: The Contractor shall notify the Engineer when excavation for a structure is complete and no forms, reinforcing steel or concrete, shall be placed until the excavation has been approved by the Engineer. Once the excavation is approved, the Contractor must protect the work from flooding or groundwater uplift.

I. Disposal of Surplus Soil or Soil High in Organics: Excavated material determined by the Engineer to be unsuitable, or in excess of the amounts required for backfill shall be stockpiled or disposed, as follows:

1. Topsoil shall be stockpiled separately from other excavation materials.

2. Removed topsoil and surplus excavation shall be removed from the site.

J. Excavation of Rock/Boulders:

1. Conventional means shall be used to remove rocks, expect isolated boulders exceeding 5 feet in dimension; these will require special excavation techniques (such as chiseling, air tools or rock splitting).

2. Non-explosive techniques are required, including ripping, chiseling, drilling, rock-splitting, etc. Blasting excavation is not allowed.

3.3 ENGINEERED FILL

A. General: All soil under pavements, embankments, and at other locations where indicated on the drawings or identified in this specification or as directed by the Geotechnical Engineer shall be made using engineered fill subgrade, carefully controlled and compacted on a prepared native subgrade. The near-surface, on-site soils consist predominantly of lean and fat clays. These soils shall not be used for engineered fill within the upper 24 inches of subgrades to support the following structures (see Section 3.3.B of the specification):

1. All slab-on grades.

2. Precast vaults and manholes less than 5 feet depth.

B. Imported non-expansive engineered fill in conformance with Table 2.0 shall be compacted in the upper 24 inches (and 2 feet beyond) of subgrade under the above structures.

C. Surface Preparation: The surface on which fill is to be placed shall be free of all vegetation, debris, or other objectionable material, and all large roots shall be grubbed out to a depth of at least 2.5 feet below footing, slab, or pavement elevations and 2 feet beyond the limits of the proposed improvements. The surface shall be scarified to a depth of 8 inches, brought to a moisture content of 2 percent above optimum and compacted to 95 percent relative compaction. It may be necessary to adjust the moisture content of the subgrade soil by watering or aeration to bring the moisture content of the soil near optimum in order that the specified densities can be obtained.

D. Placement of Fill:

1. Fill materials shall be spread in a maximum of 8-inch loose lifts and shall have a specified uniform moisture content. If necessary to obtain uniform distribution of moisture, water shall be added to each layer by sprinkling and the soil disced, harrowed, or otherwise manipulated after the water is added. If the material is too wet, the moisture content shall be reduced as necessary by spreading and aerating.

2. Field density tests shall be used to check the compaction of the fill materials. Sufficient tests shall be made on each layer by the Engineer to assure adequate compaction throughout the entire area. If the dry densities are not satisfactory, the Contractor will be required to increase the weight of the roller or the number of passes as required to produce the specified densities at no cost to the Owner.

3. Where trenches must be excavated in Engineered Fill these trenches shall be backfilled with the fill materials excavated. The backfill shall be placed in 8-inch layers and each layer compacted with pneumatic tampers to provide densities as specified above. Backfill placed adjacent to walls shall be placed in a similar manner to that specified for backfill in excavated trenches.

4. No fill shall be placed during weather conditions which will alter the moisture content of the fill materials sufficiently to make adequate compaction impossible. After placing operations have been stopped because of adverse weather conditions, no additional fill material shall be placed until the last layer compacted has been checked and found to be compacted to the specified densities.

3.4 BACKFILL AGAINST STRUCTURES

A. Walls for the following listed subsurface structures shall be backfilled with imported non-expansive fill (that meets the requirements of Table 2.0 of this Section):

1. Septage Receiving Station Headworks (screening structure, aerated grit chamber and classifier structure, and septage drain pump station)

2. Precast vaults and manholes more than 5 feet depth.

B. The zone of non-expansive fill should extend at least 2 feet behind the wall and 2.5 feet below the bottom of the slab foundation. Engineered fill shall be used beyond the non-expansive fill zone. For structures and buildings not listed above, non-expansive fill zone is not needed and engineered fill shall be used for backfill. Alternative to non-expansive fill, well graded sandy gravels such as Caltrans Class 2 aggregate base material could be used for structure backfill upon review and approval by the Geotechnical Engineer. Backfill shall be uniformly moisture conditioned 2 percent above the optimum moisture content placed in horizontal lifts less than 8 inches in loose thickness and compacted to 95 percent relative compaction.

C. Do not place backfill against newly constructed concrete structures for a period of 14 days unless authorized by the Engineer, and not until the concrete has reached the specified 28-day compressive strength requirement, as detailed in Specification Section 03100. Hand-held compactors shall be used for backfill against concrete walls within a horizontal distance of H/2 of the structure, where H is defined as the vertical height of the backfill above the foundation.

3.5 ONSITE SOILS

A. On-site soils may be used as an alternative to import fill, only if segregated, processed, stockpiled, and approved for use by geotechnical engineer.

END OF SECTION

SECTION 02229

UTILITY LINE MARKING

PART 1 GENERAL

1.1 DESCRIPTION

The work of this section consists of furnishing and installing utility line marking, identifying devices for valves, and underground warning tape for buried utilities.

1.2 RELATED WORK SPECIFIED ELSEWHERE

A. Section 01300: Submittals

B. Section 02200: Earthwork

C. Section 02223: Trenching, Backfilling, and Compacting

D. Section 10400: Identifying Devices

E. Section 15010: General Process and Onsite Utility Piping Provisions

F. Section 16050: General Electrical

1.3 SUBMITTALS

A. In accordance with Section 01300.

B. Samples: 24-inch strips of tape, 2 surface markers, and valve tags.

C. Certification that the materials used in the tape fabrication meet the requirements of this section.

D. Submit a complete schedule of all surface markers and valve box identification tags.

PART 2 MATERIALS

2.1 MARKING TAPE

A. Capable of being inductively detected electronically.

B. Construction: Metallic foil laminated between two layers of plastic film not less than 2 inches wide. The adhesive shall be colored and be compatible with the foil and film.

C. Film: Inert plastic. Each film layer shall be not less than 0.0005 inch thick (1/2 mil).

D. Foil: Not less than 0.001 inch thick (1 mil).

E. Imprint: ¾-inch or larger bold black letters.

F. Underground warning tape for buried utilities shall be imprinted with the legend identified in the Underground Utilities Schedule found in Part 3 of this Section.

G. Legend: The buried utility line tape shall be identified with imprint such as "CAUTION: SEWER LINE BELOW" and the identification repeated on approximately 24-inch intervals.

H. Detectable marking and warning tape shall be as manufactured by Lineguard, Inc., Paul Potter Associates, both of Wheaton, Illinois; Griffolyn Company, Inc., of Houston, Texas, Carlton Industries of La Grange, Texas; Brady of Milwaukee, WI; and Seton Nameplate of Branford, CT, or approved equal.

2.2 SURFACE MARKERS

1. Not Applicable.

2.3 TRACER WIRE

A. Tracer wire shall be 10 AWG soft drawn solid copper. All tracer wire shall be insulated. Insulation shall be in the color (s) indicated in the Underground Utility Marking Schedule found in Paragraph 3.4 of the Section.

B. Tracer wire shall be brought to the surface at each valve box, fire hydrant, manhole, structure, and any other location indicated in the Project Drawings. Tails shall be able to extend not less than 18 inches above finished grade.

PART 3 EXECUTION

3.1 MARKING TAPE

A. Install tape in backfill directly over each buried utility line, directly above the pipe zone. Multiple strands of tape needed for different sized pipe:

Pipe Size	Tape Strands Required
¾" – 12"	1
15" – 30"	2
36" and larger	3

B. Install warning tape in backfill, with the legend facing up, directly over each buried utility line, directly above the pipe zone, unless otherwise noted on the drawings.

C. Where utilities are buried in a common trench, identify each line by a separate warning tape. Bury tapes side by side directly over the applicable line.

D. Tape color shall conform to typical industry standards.

E. For "Reclaimed Water" pipe, wrap the pipeline with metallic tape, 12-inches minimum width, purple in color labeled "Reclaimed Water". Wrap spirally around the pipe throughout the entire pipe length, with a pitch such that no gap greater then 12-inches exists longitudinally down the pipe. Secure circumferentially at intervals not exceeding 2 pipe diameters with duct tape.

F. For above grade piping identification markers, see specification section 10400.

3.2 SURFACE MARKERS

Outside paved areas, provide stakes for pipelines 14-inch and larger at 250 feet intervals and at all changes in alignment or end or pipe.

3.3 TRACER WIRE

A. Tracer Wire shall be installed for each pipeline indicated in the table below. Tracer wire shall be secured to the top of each pipeline at intervals not to exceed 4 feet.

B. Tracer wire shall be brought to the surface at each valve box, fire hydrant, manhole, structure, and any other location indicated in the Project Drawings. Tails shall be able to extend not less than 18 inches above finished grade.

3.4 UNDERGROUND UTILITY MARKING SCHEDULE

Utility diameter sizes 12-inches and smaller shall have 3-inch wide marking tape, all others shall be 12-inches wide. Underground warning tape shall be color coded as specified below and shall be imprinted with a two-line message. The top shall read, "CAUTION CAUTION..." and the bottom line shall read as indicated below:

Service	Width	Color	Legend	Tracer Wire
Potable Water	3"	Blue	Buried Water Line Below	Blue/Black
Reclaimed Water	3"	Purple	Buried Reclaimed Water Line Below	Purple/Black
Raw Water	3"	Green	Buried Non-Potable Water Below	Black
Treated Water	3"	Green	Buried Non-Potable Water Below	Black
Gravity Sewer	3"	Green	Buried Sewer Below	Green/Black
Sewer Main Force	3"	Green	Buried Sewer Below	Green/Black
Other Non-Potable Water (Sludge, Etc.)	3"	Green	Buried Non-Potable Water Below	Black
Natural Gas/Fuel Oil	3"	Yellow	Buried Gas/Fuel Line Below	Yellow
Compressed Air	3"	Orange	Buried Compressed Air Service Below	N/A
Storm Drain	3"	Green	Buried Storm Drain Below	N/A
Chemical (SHC, SHX, Lime, etc.)	3"	Yellow	Buried Chemical Service Below	N/A
Electric	3"	Red	Buried Electrical Service Below	N/A
Communications/Fiber Optics/Cable/Telephone	3"	Orange	Buried Communications Service Below	N/A
All Others	3"	Yellow	Caution Buried Utility Below	N/A

END OF SECTION

SECTION 02233

WATERING

PART 1 GENERAL

1.1 DESCRIPTION

The work of this section consists of furnishing, hauling, and applying water required in the compaction of embankments, backfills, subgrade, and base course, and for landscaping, dust control, and other construction operations.

PART 2 MATERIALS

2.1 WATER

A. Non-potable water is available at the project site. Use of non-potable water for construction and testing purposes shall be coordinated by the Contractor at the Contractor's expense.

B. Potable water is not available at the project site. Potable water for use by the Contractor for Construction or other purposes shall be coordinated by the Contractor at the Contractor's expense.

C. No provision in this section is intended to prevent the Contractor from making arrangements for water from other than Owner sources. All costs involved shall be the responsibility of the Contractor.

PART 3 EXECUTION

3.1 EQUIPMENT

A. Contractor shall provide all necessary pumping equipment, piping, meters, tanks, and water trucks to withdraw and utilize the water. Water trucks shall be of at least 1,000 gallon capacity, equipped with a spray bar of ample capacity and design to insure uniform application of water in the amounts required.

B. The Contractor shall identify all equipment using or hauling "Reclaimed Water" and "Non-Potable Water" to notify workmen of potential for contact. Signage shall be as approved by the Engineer.

END OF SECTION

SECTION 02270

STORMWATER RUNOFF CONTROL PROGRAM

PART 1 GENERAL

1.1 DESCRIPTION

A. This specification section describes requirements for compliance with State Water Resources Control Board (State Board) National Pollutant Discharge Elimination System (NPDES) General Permit for Storm Water Discharges Associated with Construction and Land Disturbance Activities Order No. 2022-0057-DWQ (previously known as 2009-009-DWQ as amended by Order No. 2012-006-DWQ and Order No. 2010-014-DWQ), Construction General Permit. The Construction General Permit contains requirements for the preparation and implementation of a Stormwater Pollution Prevention Plan (SWPPP) to minimize surface water pollution from construction-related activities prior to disturbing a site. Requirements to perform a Risk Assessment, to prepare and implement a Construction Site Monitoring Program (CSMP) and select appropriate Best Management Practices (BMPs) to be employed by the Contractor to reduce or eliminate sediment and other pollutants in stormwater and non-stormwater discharges to local surface waters during all phases of construction are also contained within the Construction General Permit. The Contractor will be responsible for compliance with the Construction General Permit and any other applicable stormwater regulations. The Contractor will be required to produce a SWPPP and CSMP, pursuant to the requirements of the Construction General Permit.

B. The Contractor will be responsible for producing all of the documentation necessary to obtain coverage under the Construction General Permit prior to the commencement of construction activity. The Contractor shall prepare all documentation as specified in Attachment B “Permit Registration Documents (PRDs)" to Comply with the Terms of the General Permit to Discharge Storm Water Associated with Construction Activity General Instructions” of the Construction General Permit.

C. This specification section, in addition to specification Section 02272, details the minimum essential elements of the SWPPP, Risk Assessment and CSMP. The Contractor will be responsible for employing a Qualified SWPPP Developer (QSD) to develop a complete SWPPP that includes all elements set forth in Section XIV, “Storm Water Pollution Prevention Plan”, of the Construction General Permit. In addition, the Contractor will be responsible for implementing a CSMP consistent with the requirements in Attachment C “Risk Level 1 Requirements”, Attachment D “Risk Level 2 Requirements”, or Attachment E “Risk Level 3 Requirements” of the Construction General Permit, and a “Risk Determination Worksheet” included in Appendix 1 of the Construction General Permit.

D. The Contractor will be responsible for complying with all aspects of the Construction General Permit, including the development and implementation of a SWPPP, by a QSD, and CSMP prior to disturbing the site and commencing construction. The initial SWPPP and CSMP must be reviewed and accepted as part of the construction contract by the Engineer before they are considered finalized. Further, all Permit Registration Documents (PRDs) prepared for obtaining coverage under the Construction General Permit must be reviewed and accepted as a part of the construction contract by the Engineer before they are considered finalized for submittal via the Stormwater Multiple Applications and Report Tracking System (SMARTS).

E. Disposal of construction water from operations such as groundwater dewatering and water used for testing, disinfecting, and flushing pipelines is not part of the work under this section. Refer to Sections 02140, and 02223 for permit requirements for those discharges.

1.2 RELATED INFORMATION DESCRIBED ELSEWHERE

A. Section 01010 - General Construction Information and Requirements

B. Section 01300 - Submittals

C. Section 02140 - Dewatering

D. Section 02223 - Trenching, Backfilling, and Compacting

E. Section 02272 - Vegetative Erosion Control

F. California Stormwater Quality Association (CASQA) Stormwater Best Management Practice Handbook, Construction: www.cabmphandbooks.com/construction.asp

G. California Stormwater Quality Association, Construction Site Best Management Practices (BMP) Handbook/Portal, 2023: https://www.casqa.org/resources/bmp-handbooks

H. State Water Resources Control Board Construction Storm Water Program website: http://www.swrcb.ca.gov/water_issues/programs/stormwater/construction.shtml

1.3 STORM WATER DISCHARGES ASSOCIATED WITH CONSTRUCTION ACTIVITY AND LAND DISTURBANCE ACTIVITIES GENERAL PERMIT

A. The Contractor shall read and be familiar with all requirements contained in the Construction General Permit necessary to implement and maintain a viable SWPPP and CSMP. The Contractor shall comply with all the requirements set forth in the Construction General Permit.

B. The Contractor shall note that compliance with the requirements contained in the Construction General Permit may require the use of pollution control procedures outside the limits of immediate construction activity, (e.g., tarping haul truck to prevent fugitive dust or debris).

1.4 NOTICE OF INTENT

To obtain coverage under the Construction General Permit, a Notice of Intent (NOI) must be filed via SMARTS prior to commencement of construction activity. A copy of the completed NOI and Waste Discharge Identification (WDID) Number must be included in the SWPPP. The Contractor shall complete the NOI and provide a copy to the Owner with the completed SWPPP and CSMP, which will ultimately be Certified and filed by Owner. The Contractor shall prepare all documentation as specified in Attachment B "Permit Registration Documents (PRDs) to Comply with the Terms of the General Permit to Discharge Storm Water Associated with Construction Activity General Instructions" of the Construction General Permit. All PRDs must be provided by the Contractor in electronic form for submittal via SMARTS.

1.5 RISK ASSESSMENT

The Contractor shall conduct a Risk Assessment to determine the project's Risk Level using the procedure described in Appendix 1 "Risk Determination Worksheet" of the Construction General Permit. There are two elements used to define the project's overall risk; 1) Project Sediment Risk, and 2) Receiving Water Risk. These two elements are used to further define the project into three risk categories which are identified as Levels 1, 2, and 3. These Risk Levels determine the type and extent of monitoring and reporting as further described in Attachment C "Risk Level 1 Requirements", Attachment D "Risk Level 2 Requirements" and Attachment E "Risk Level 3 Requirements" of the Construction General Permit. The results of the Risk Assessment must be submitted and approved by Engineer prior to uploading to SMARTS. The Risk Assessment shall be included within the PRDs that are submitted electronically via SMARTS.

1.6 SUBMITTALS

A. Within ten (10) calendar days after issuance of the Notice of Award, the Contractor shall submit (as per Section 01300, Submittals), at a minimum, the following information for review and, upon acceptance by the Engineer, incorporation into the SWPPP:

1. SWPPP Compliance Certification-Contractor(s) (form in Caltrans Stormwater Quality BMP Handbook Appendix B);
2. Contractor's Summary of Responsibilities;
3. Erosion Prevention Plan, narrative and detailed graphic (figures shall not be at scales greater than 100 feet per inch);
4. Sediment Control Plan, narrative and detailed graphic (figures shall not be at scales greater than 100 feet per inch);

5. Documentation of Qualifications for the Qualified SWPPP Developer(s) and Qualified SWPPP Practitioner(s) designated for the project;

6. Confirmation that the Contractor has obtained a SMARTS account and appropriate username information;

7. Rain Event Action Plan (REAP), if Risk Level 2 or Risk Level 3 project as described in the Construction General Permit;

8. Project Construction Schedule (refer to Caltrans BMP #SS-1);

9. BMP Selection and Implementation Schedule (refer to Caltrans BMP Handbook or CASQA Stormwater Construction BMP Handbook);

10. Contractor's weather forecast source (i.e., National Weather Service rain gauge or website or Company and report name or on-site rain gauge) for storm event preparation;

11. Hazardous Materials Inventory List with reference to Contractor's Hazardous Materials Business Plan (Federal and County requirement);

12. Safety Plan: Cal OSHA. Title 8, Chapter 4, Subchapter 4 - Construction Safety Orders Sections 1500 through 1938 and Subchapter 7 – General Industrial Safety Orders, with emphasis on chemical handling and storage (refer to www.dir.ca.gov/samples/search/query.htm).

B. The submittal shall detail the Contractor's selected BMPs with brief justification on why that BMP is selected, the intended installation date and location on the site. BMP materials and specifications shall be provided, including, where applicable, reference to BMPs described in the Construction General Permit and specification Section 02272. If the Contractor believes additional or alternative BMPs are necessary, details shall be provided. The Contractor will be required to revise, or supplement, submitted information that is inadequate or incomplete in the opinion of the Engineer.

C. Once the information is compiled, the Contractor will finalize and submit the proposed SWPPP, all Permit Registration Documents, and NOI for coverage under the Construction General Permit to the Owner and Engineer for final acceptance. The SWPPP will be kept on-site for reference in compliance monitoring.

D. The Contractor shall submit all of the PRDs required for submittal of an NOI for coverage under the Construction General Permit to the Engineer for review and acceptance. All PRDs must be provided in an electronic format compatible with SMARTS.

E. In the event the Contractor desires to implement environmental protection BMPs differently than detailed in the Plans and Specifications or the SWPPP, the Contractor may provide a submittal with his alterations/amendments to the Engineer. All alterations or amendments must get prior authorization from the Engineer as outlined in the SWPPP. However, if the Contractor desires to implement alternative BMPs to those detailed exclusively in the SWPPP for an emergency repair to prevent an offsite discharge, he may

do so without prior consent. No schedule delays will be allowed due to BMP revisions proposed by the Contractor, unless authorized by the Owner.

F. Within 90 days of completion of construction activities, the Contractor shall prepare a Notice of Termination (NOT) of coverage under the Construction General Permit for electronic submittal via SMARTS. The Contractor will be responsible for meeting all of the conditions for termination of coverage, as specified in Section II.D of the Construction General Permit and including all of the required items in the NOT.

1.7 MEASUREMENT AND PAYMENT

The Contractor shall be responsible for all costs associated with the development of NOI and Permit Registration Documents, including the SWPPP and CSMP. The Contractor shall be responsible for maintaining and implementing the SWPPP and CSMP consistent with Construction General Permit requirements. This includes the installation, maintenance, and removal of erosion and sediment control practices specified in the SWPPP upon completion of the project or as requested by the Engineer. These costs shall be included in the lump sum bid amount.

PART 2 MATERIALS

2.1 STORMWATER POLLUTION PREVENTION PLAN

A. The Contractor shall utilize all materials as approved and as necessary to implement a successful site-specific SWPPP in accordance with the requirements specified in the Construction General Permit. Refer to specification Section 02272 for materials used in vegetative erosion control and CASQA Construction Stormwater BMP Handbook/Portal for material used in additional BMPs.

B. The Contractor is responsible for appointing a Qualified SWPPP Practitioner (QSP) to implement the BMPs to maintain positive pollution prevention, as described in the SWPPP, in response to the monitoring program reports, or as circumstances require. Materials and the costs thereof, for stormwater pollution prevention, are the responsibility of the Contractor.

PART 3 EXECUTION

3.1 GENERAL

A. The SWPPP, NOI and CSMP shall be provided by the Contractor and submitted to the Owner. The SWPPP and CSMP must be accepted by the Owner and the Engineer prior to commencement of construction activities in the field.

B. The Contractor shall be responsible for employing a Qualified SWPPP Developer (QSD) to compose, revise and certify the SWPPP.

C. The Contractor will provide, at a minimum, site specific information as listed in 1.6 Submittals.

D. Contractor shall provide SWPPP in electronic format suitable for upload to SMARTS (i.e. .doc / .pdf), and shall upload the SWPPP to SMARTS following approval.

E. The Contractor shall comply with all conditions identified in the Construction General Permit, which apply to the work under this contract.

F. The Contractor shall be responsible for the compliance of his personnel and subcontractors with the SWPPP and implementation of the CSMP.

G. The SWPPP (document) shall be kept on site during construction activity and made available upon request of a representative of the State Board, Regional Water Quality Control Board (Regional Water Board), and/or other regulatory agency.

H. The Contractor shall employ BMPs as detailed in the SWPPP during and post construction operations to adequately prevent the discharge of pollutants to surface waters, including the municipal storm sewer system.

I. The Contractor shall be responsible for employing a QSP to oversee implementation of the SWPPP & BMP's to comply with the Construction General Permit.

3.2 STORMWATER POLLUTION PREVENTION PLAN

The SWPPP shall include the required elements set forth in Section XIV, "Storm Water Pollution Prevention Plan", of the Construction General Permit. At a minimum, the SWPPP shall provide a description of potential sources which are likely to add significant quantities of pollutants to stormwater discharges or which may result in non-stormwater discharges from the construction site. The SWPPP, in accordance with this specification section and specification Section 02272, shall also provide guidelines on how to prevent potential pollutants and commingled waters from leaving the site, as well as wind-induced sediment transport. The CSMP shall be included within the SWPPP as an appendix or a separate chapter. Risk assessment worksheets shall also be included within the SWPPP as an appendix or a separate chapter.

3.3 CONSTRUCTION SITE MONITORING PROGRAM

A. The Contractor shall implement the CSMP based on the Risk Level determined during the Risk Assessment. Specific monitoring and reporting requirements are required based on the assigned Risk Level. The Contractor shall also be responsible for monitoring and inspecting his actions and the activities of those responsible to the Contractor.

B. Monitoring and Inspection:

The Contractor will be responsible for maintaining an Activity Log, which includes documentation of the following information:

1. Location (using grid map) of weekly construction activities;
2. Confirmation that the appropriate BMPs have been installed per the respective BMP specifications by a QSP;
3. Confirmation that each BMP is being properly maintained per the respective BMP specifications by a QSP;
4. Any corrective action taken by the Contractor to ensure proper BMP installation and maintenance;
5. Confirmation that proper housekeeping is being maintained at the site;
6. Confirmation that trash/debris is being controlled and properly stored in covered containers;
7. Confirmation that identified oil spills/leaks are being cleaned up and the contaminated waste and soils are being properly stored and disposed of;
8. Evidence that any leaking equipment or vehicles are being taken out of service and repaired prior to continued use; and
9. Records of all Construction General Permit required visual inspections and sample collection.

C. The Contractor's Activity Log input will be reviewed for accuracy and completeness by the Engineer or an assigned representative of the Owner. The logs become a part of the Stormwater SWPPP/CSMP as partial evidence of compliance with stormwater management regulations. Any deficiencies identified by the Engineer will be brought to the Contractor's attention and shall be corrected at no additional cost to the Owner.

D. In addition to the Activity Log, it is the Contractor's responsibility to report to the Owner any discharges immediately after discovery. At the Owner's discretion, the Contractor may be required to notify the appropriate regulatory agency (i.e. Regional Water Board, DHS). These discharges may include, but are not limited to:

1. fuels
2. oils
3. chemicals
4. sanitary wastes
5. process and wash waters
6. sediment laden waters

E. The Contractor shall allow representatives of the Owner, the Agency, the State Board, the Regional Water Board, and/or other regulatory agencies to enter the construction site, inspect the construction site for compliance, and sample and monitor the construction site discharges.

F. The CSMP may extend past the completion date for this contract. The Contractor's responsibilities for the CSMP will cease upon closure of three conditions: 1) acceptance by the Owner of all work under the contract; 2) the Contractor submits information to the Engineer verifying the site meets the criteria for the NOT, which the Contractor will complete for electronic submittal via SMARTS for approval; and 3) final acceptance not given by Owner until the State Board or Regional Water Board issues approval of the NOT.

G. The Contractor will be responsible for implementing an CSMP based on the determined Risk Level consistent with the requirements in Attachment C "Risk Level 1 Requirements", Attachment D "Risk Level 2 Requirements, and Attachment E "Risk Level 3 Requirements" of the Construction General Permit.

H. The Contractor will be responsible for preparing an annual report by September 1 of each year for electronic submittal via SMARTS. Annual reports are required to include all elements identified in Section XVI of the Construction General Permit, including certification of compliance with the requirements specified in Section XVI of the Construction General Permit.

3.4 DUTY TO COMPLY

A. The Contractor shall comply with all conditions identified in the Construction General Permit, SWPPP, and CSMP. Non-adherence with the conditions specified in the Construction General Permit may constitute a violation of the Clean Water Act and the Porter-Cologne Water Quality Control Act and may be grounds for enforcement action by the State, which can carry civil or criminal penalties (some cases under Porter-Cologne exceed CWA penalties of $37,500 per day).

B. The Contractor shall take all reasonable steps to minimize or prevent any discharge in violation of the Construction General Permit.

3.5 COMPLIANCE CERTIFICATION

A. A QSD of the Contractor shall certify the Contractor's stormwater handling roles and responsibilities by signing the "SWPPP Compliance Certification" for the SWPPP (included in Caltrans BMP Handbook Appendix B), as well as annual reports required under the Construction General Permit. The purpose of these forms is to certify that the construction activity is, and has been, in compliance with or has been modified to comply with, the requirements of the Construction General Permit and the SWPPP.

B. During construction, if the Contractor determines that he cannot maintain the site in full compliance with the Construction General Permit and SWPPP requirements, he shall notify the Engineer and Owner immediately. It shall be the responsibility of the Contractor to provide a written Notice of Noncompliance to the Regional Water Board within 30 days of knowledge of the following noncompliant conditions; which the Contractor may need to provide information for:

1. Failure to certify, by July 1 of each year, that the project's construction activities comply with the provisions of the SWPPP and the Construction General Permit;
2. Failure to implement the BMPs listed within the SWPPP, in accordance with the schedule outlined within the SWPPP;
3. Failure to conduct inspection, monitoring and/or reporting as described within the SWPPP; and/or
4. Failure to initiate corrective actions to BMP breaches, failures, and emergency situations.

C. The Contractor shall prepare an annual report by September 1 of each year for electronic submittal via SMARTS. Annual reports are required to include all elements identified in Section XVI of the Construction General Permit, including certification of compliance with the requirements of the Construction General Permit.

END OF SECTION

SECTION 02272

VEGETATIVE EROSION CONTROL

PART 1 GENERAL

1.1 DESCRIPTION

The work of this specification section consists of furnishing and installing vegetative erosion control as specified herein. Vegetative erosion control shall be applied on all disturbed areas that are not paved, graveled, lined, or landscaped, including all graded or disturbed areas at the wastewater treatment plan site and access road. This section describes both the vegetative erosion control efforts with and without anchored straw. The approach without straw shall be utilized from May 1st until October 15th and the process utilizing anchored straw from October 15th through April 30th.

1.2 QUALITY ASSURANCE

A. Use adequate numbers of skilled workmen who are thoroughly trained and experienced in the necessary crafts and who are completely familiar with the specified requirements and the methods needed for proper performance of the work of this section.

B. Planting materials shall meet or exceed the specifications of federal, state, and local laws requiring inspection for plant disease and insect control.

1.3 SUBMITTALS

A. Comply with pertinent provisions of Section 01300.

B. Submit complete materials list of items proposed to be submitted under this section, complete data on source and quality, and sufficient data to demonstrate compliance with the specified requirements.

PART 2 MATERIALS

2.1 FERTILIZER

A. Commercial fertilizer shall be ammonium phosphate (16-20-0) and contain a minimum of 16 percent nitrogen, 20 percent available phosphoric acid, zero percent water soluble potash, uniform in composition, dry and free flowing, pelleted or granular.

B. All fertilizer shall be delivered in unbroken or unopened containers, labeled in accordance with applicable State regulations and bearing the warranty of the producer for the grade furnished.

2.2 SEED

A. All seed shall be delivered to the site tagged and labeled in accordance with the California Agricultural Code, and shall be acceptable to the County Agricultural Commissioner. Seed mixture shall be guaranteed for a minimum of 80% germination.

B. Bag tag figures will be evidence of purity and germination. Time since date of seed test shall not exceed 9 months.

C. Seed shall be of a quality that weed seed shall not exceed 0.5 percent of the aggregate of pure live seed (PLS) (percent germination x percent purity) and other material.

D. Seed shall be a mixture acceptable to the County of El Dorado standards (for MLRA 18). Mixture shall include following in proportion to application rates:

Grasses and Legumes	Pound/Acre
Blando Brome	24
Rose Clover (Trifolium hirtum)	18
Wildflowers	
Lupine	2
California Poppy (Eschscholzia californica)	2

E. Seed shall be furnished separately or in mixture of the proportionate quantities listed above in standard containers with the variety and net weight shown. Based on bag tags, seeding rates shall be adjusted to insure the required amounts of pure live seed.

2.3 INOCULANTS

A. The inoculant for treating legume seeds shall be a pure culture of Nitrogen fixing bacteria prepared specifically for the plant species and shall not be used later than the date indicated on the container. A mixing medium, as recommended by the manufacturer or approved substitute, shall be used to bond the inoculant to the seed. For nonpellet inoculated seed, two times the amount of the inoculant recommended by the manufacturer shall be used and seed shall be sown within 24 hours.

B. For pellet inoculated seed, at least 30 pounds of inoculant shall be used per 1,000 pounds of raw seed and the seed shall be labeled to show the Lot Number, Expiration Date, and Percent Coat of the finished product. Pellet inoculated seed shall be kept cool and sown within 180 days. Use only fresh, age-dated inoculant specifically labeled for the legume to be seeded.

2.4 WOOD FIBER MULCH

A. Wood fiber shall be a wood cellulose fiber that contains neither germination nor growth inhibiting factors. The wood fiber shall be produced from nonrecycled wood such as wood chips or similar wood materials. It shall be manufactured in such a manner that after addition and agitation in slurry tanks with fertilizer, seed, water, and other approved additives, the fibers in the material will become uniformly suspended to form a homogeneous slurry; and that when hydraulically sprayed on the ground, the material will form a blotter-like ground cover impregnated uniformly with seed; and which after application, will allow the absorption of moisture and allow the rainfall to percolate to the underlying soil. It shall be colored with a nontoxic water-soluble green dye to provide a proper gauge for metering of material over ground surfaces.

B. The wood fiber mulch may also be produced from the following materials:

1. Recycled wood fiber, such as wood chips or similar wood materials;
2. A combination of recycled newsprint and cardboard materials that contain at least 50 percent cardboard; or
3. A combination of recycled newsprint and non-recycled wood fiber or recycled wood fiber materials that does not contain more than 50 percent newsprint.

C. Cellulose shall be certified to indicate that laboratory and field testing of the product has been accomplished and that it meets all of the foregoing requirements based on testing. Weight specifications of this material from suppliers and for all application shall refer only to air dry weight of the fiber material.

D. Absolute air dry weight is based on the normal standards of the Technical Association of the Pulp and Paper Industry for wood cellulose and is considered equivalent to 10% moisture. Each package of the cellulose fiber shall be marked by the manufacturer to show the air dry weight content.

E. Alternate Mulching Methods: Contractor may either stockpile topsoil (or “duffing”) and reapply it six inches thick to exposed areas as approved by the Engineer. Or, Contractor may use mechanically punched clean (free of noxious weed seeds and molds), rice barley, or wheat straw with fibers at less than six inches in length, as approved by the Engineer.

2.5 TACKIFIER

Tackifier/soil binder material shall be one of the following and shall have the property to be evenly dispersed and suspended in water when agitated: M-Binder, Sentinel, Ecotak-SAT, Fish-STIK, Soil Master WR, and Soil Sement.

2.6 WATER

See Specification Section 02233 for water availability. Add to the slurry mixture in sufficient amount to spread uniformly the required quantity of hydromulch solids.

2.7 STRAW

Straw shall be new straw derived from rice, wheat, oats, or barley that meets the County Agricultural Commissioner's standards for weed pests. Clearance shall be obtained from the County Agricultural Commissioner, as required by law, before straw obtained outside the county in which it is to be used is delivered to the site.

PART 3 EXECUTION

3.1 APPLICATION PROCEDURE

A. General: Erosion control shall consist of surface preparation, seeding, fertilization, mulching, and maintenance, and potentially irrigation. Prior to October 15th, all vegetative erosion control efforts utilizing the hydroseed technique without straw will be the two-stepped process of applying seed, inoculant (if applicable), fertilizer, water, and wood fiber mulch, followed by second step of more mulch, water and tackifier/soil binder. Post October 15 application shall include a middle step of blown straw, which shall then be anchored. After the Engineer has accepted the graded surface, it shall be seeded and mulched. Seeding shall be done preferably between September 15th and October 15th, however, hydroseeding can be used as a BMP during the construction season prior to September 15th, if appropriate measures are additionally provided for (i.e. eliminate vehicular traffic on area).

B. Site Preparation: Large rocks (2-1/2" or greater) should be removed from the slopes. Any uneven area should be graded so that water will not collect and cause concentrated flows; refer to Caltrans BMP# SS-4: Hydroseeding, for grading prior to hydroseeding. If the soil surface is crusted from a previous rain, then it should be raked or dragged to break it up. Small clods or a rough appearance should not be of concern as they help to hold the seed and the rainfall. Remove all trash, weeds, and other debris.

Seedbed preparation shall be suspended when soil moisture conditions are not suitable for obtaining a satisfactory seedbed.

C. Fertilization: Fertilizer shall not be applied more than 15 days prior to seeding. Fertilizer shall be distributed uniformly over the seedbed at the rate of 500 pounds per acre.

Fertilizer shall be applied in any way that will result in uniform distribution. It is recommended that fertilizer be applied hydraulically by hydroseeder in the form of a slurry. The slurry shall also contain the required seed, inoculants (if applicable), mulch, and water. Fertilizer shall not remain in the slurry longer than two (2) hours.

D. Seedings: The seed shall be drilled, broadcast, or distributed uniformly in a water slurry by hydroseeder. The seeds shall be covered by approximately ¼- to ½-inch mulch.

The hydroseeder shall be equipped with a built-in continuous agitation system of sufficient operating capacity to produce a homogeneous slurry and a discharge system that will apply the slurry to the slopes at a continuous and uniform rate.

Seed shall not remain in the slurry longer than 30 minutes. The slurry in this first application shall also contain wood fiber mulch at the rate of 500 pounds per acre and the required fertilizer.

Application rates for wood fiber mulch products that have moisture contents greater than 15 percent shall be increased by the following factor, c:

$$c = \frac{85\ percent}{percent\ \ fiber\ (solids)\ in\ \ product}$$

The wood fiber shall not remain in the slurry longer than two (2) hours. Water used shall be potable water or Class 1 or 2 agricultural irrigation water.

The slurry shall be continuously mixed and shall be mixed for at least five (5) minutes after the last addition before application starts. The slurry shall be applied uniformly over the site at a rate that is nonerosive and minimizes runoff.

E. Mulching Areas Equal to or Greater Than 2:1 Slope (netting installation regardless of application date): Material shall be hand punched straw or wood fiber blankets or bio-composite reinforcing matting. Regions with concentrated flow shall have American Excelsior Curlex Enforcer II or equal while regions with high velocity flows shall have American Excelsior Curlex III or equal. Netting rolls shall be applied up and down the slope with a 4-inch minimum side-to-side overlap and a 3-foot minimum end-to-end overlap.

The upper end of the netting shall be buried at least eight (8) inches into the soil. Overlap of matting shall be provided. Anchor pin or staple spacing shall be five (5) feet down sides and center of rolls driven perpendicularly into soil. Spacing at top end and at end overlaps shall be one (1) foot. If manufacturer installation recommendations are more conservative, manufacturer recommendations take precedence.

F. Mulching Areas Less Than 2:1 Slope (hydromulch seeding installation):

1. General Equipment Requirements: Use hydraulic equipment for the application of the fertilizer, seed, and slurry of prepared wood pulp of the type approved by the Engineer. This equipment shall have a built-in agitation system and operating capacity sufficient to agitate, suspend and homogeneously mix a slurry containing up to 40 pounds of fiber plus combined total of 70 pounds fertilizer solids for each 100 gallons of water. The slurry distribution lines shall be large enough to prevent stoppage and be equipped with a set of hydraulic spray nozzles which will provide a continuous non-fluctuating discharge and delivery of the slurry of the prescribed quantities uniformly, without misses, waste, or erosion. The slurry tank shall have a minimum capacity of 1,000 gallons and be mounted on a traveling unit which may be either self-propelled or drawn with a separate unit which will place the slurry tank and spray nozzles within sufficient proximity to the areas to be seeded so as to provide uniform distribution. The Engineer may allow equipment with smaller tank capacity provided that the equipment has the necessary agitation system and sufficient pump capacity to spray the slurry in a uniform coat.

2. Mulching Application May 1st to October 15th:

   a. Wood fiber with tackifier shall be distributed uniformly over the seeded area in a water slurry by hydroseeder. Application shall be made within 48 hours following seeding.

   b. The hydroseeder shall be equipped with a built-in continuous agitation system of sufficient operating capacity to produce a homogeneous slurry and a discharge system that will apply the slurry to the slopes at a continuous and uniform rate.

   c. The slurry in this second step of application shall contain wood fiber at the rate of 1500 pounds per acre and tackifier. The wood fiber shall not remain in the slurry longer than two (2) hours. Water used shall be potable water or Class 1 or 2 agricultural irrigation water.

   d. Irrigation: Irrigation of hydroseeded regions shall only be mandated if application is prior to September 15th, and early rains caused germination. Irrigation shall continue until natural atmospheric moisture is enough to sustain growth.

3. Mulching Application October 15TH to May 1st:

   a. A straw covering shall be distributed uniformly over the seeded area within 48 hours after seeding. Straw shall be applied at the rate of two (2) tons per acre. The straw shall be applied by hand, blower, or other suitable equipment. If straw is applied by blower, it shall not be chopped in lengths less than six (6) inches.

   b. Anchoring The Mulch Mechanically: The straw mulch shall be anchored in place via hand tools, mulching rollers, disks, or similar types of suitable equipment alone or in combination with a hydro-mulch material and shall be performed in a satisfactory manner.

c. Anchoring Straw Mulch With Hydro-Process: All applications from October 15th to May 1st shall utilize a hydro-mulch anchoring process. The hydro-mulch material shall be applied uniformly over the straw in a water slurry by hydroseeder within 48 hours following mulching. The hydromulch shall be wood fiber mulch, a tackifier, and water in the following portions per acre:

Tackifier	Rate (pounds)	Wood Fiber Mulch (pounds)	Water (gallons)
M-Binder	100	150	700
Ecotak-SAT	100	150	700
Sentinel	100	500	2,000
Fish -STIK	60	500	3,000
Soil Master WR	100	250	1,000

d. The hydroseeder shall be equipped with a built-in continuous agitation system of sufficient operating capacity to produce a homogeneous slurry and a discharge system that will apply the slurry to the slopes at a continuous and uniform rate.

e. The materials shall not remain in the slurry longer than two (2) hours. Water used shall be potable water or Class I or 2 agricultural irrigation water.

f. The slurry shall be continuously mixed and shall be mixed for at least five (5) minutes after the last addition before application starts. The slurry shall be applied uniformly over the site at a rate that is non-erosive and minimizes runoff.

G. Preliminary Inspection: Notify the Engineer 48 hours in advance of all seeding. Inspection and favorable review of the completed work shall begin the plant establishment period.

H. Plant Establishment Maintenance:

1. General plant maintenance shall immediately follow seeding and continue until all seeded areas are 85% germinated and covered with acceptable stands of grass and clover.

2. Protect areas against all damage, including erosion and trespass, and provide proper safeguards. Maintain and keep in good repair all temporary barriers erected to prevent trespass. Check all barriers and temporary fencing daily, and make immediate repairs or replacements.

3. Repair all damage to seeded areas.

4. Contractor shall irrigate as necessary (refer to 3.1.F.2.d) to maintain a minimum moisture of 30% percent to a depth in soil of two (2) inches to ensure vigorous growth.

5. Continue maintenance for at least 45 days or until the grass is established as accepted by Engineer.

I. Initial Inspection for Acceptance: Initial inspection for acceptance will be conducted upon completion of maintenance replacements, and corrective work. Three (3) days notice shall be given. If project improvements, corrective work, and maintenance have not been performed as specified and to the satisfaction of the Engineer, maintenance shall continue at Contractor's expense until such time as work has been successfully completed.

J. Guarantee, Replacement, and Final Acceptance:

1. Guarantee all planting to be in a healthy, thriving condition until the end of the maintenance period.

2. Replace all seeded areas not in vigorous condition as soon as directed by Engineer. Repair any erosion in areas where grass does not become established. Seed mixture used for replacement must be of the same type and quantity as specified in this specification section.

3. Final acceptance requires a four (4) inch high stand of plant material, 200 grass plants/ft^2, and 100% coverage (i.e. no areas larger than one [1] ft^2 with less than the specified coverage).

END OF SECTION

SECTION 02513

ASPHALT CONCRETE PAVING

1.1 DESCRIPTION

This section includes materials, testing, and installation of asphalt concrete pavement, aggregate base course, herbicide, prime coat, tack coat, and seal coat.

1.2 RELATED WORK SPECIFIED ELSEWHERE

A. Section 01300 - Submittals

B. Section 02200 – Earthwork

C. Appendix A – Geotechnical Report

1.3 SUBMITTALS

Submit in accordance with Section 01300 copies of a report from a testing laboratory verifying that aggregate material and asphalt binder conform to the specified gradations or characteristics.

Submit six copies of a report from a testing laboratory verifying that aggregate material conforms to the specified gradations or characteristics.

1.4 STANDARD SPECIFICATIONS

Where reference is made to State Specifications, reference shall mean California Department of Transportation (Caltrans) Standard Specifications, and, where appropriate, the El Dorado County Transportation Department Standards.

In case of conflict between any requirements set forth in this Section and any provisions of the El Dorado County Transportation Department Standards, the most stringent requirement will govern.

PART 2 MATERIALS

2.1 ASPHALT CONCRETE PAVING

Asphalt concrete paving shall conform to Type A in Section 39 of the State Specifications, having ½-inch-maximum medium grading with paving grade asphalt PG 64-16 unless otherwise directed by the Engineer. Recycled asphalt, reclaimed asphalt paving (RAP) may be used up to 15% of the hot mix asphalt, as defined in Section 39 of State Specifications.

2.2 AGGREGATE BASE COURSE

Aggregate base shall be Class 2 aggregate base, ¾-inch-maximum size per Section 26 of the State Specifications. Aggregate shall contain no detectable asbestos, or recycled materials such as waste concrete or recycled asphalt concrete.

2.3 TACK COAT

Tack coat shall be Rapid-Setting Type per Section 94 of the State Specifications. Use Slow-Setting Type per Section 94 of the State Specifications if a delay or more than 4 hours is expected between application of tack coat and paving operations.

2.4 ASPHALT BINDER

Asphalt binder to be mixed with the aggregate shall be paving asphalt grade PG 64-16conforming to Section 92 of State Specifications.

2.5 AGGREGATE FOR ASPHALT CONCRETE

Aggregate shall be Type B per Section 39-2.02 of State Specifications. Aggregate shall contain no detectable asbestos.

2.6 SEAL COAT

Seal coat shall be Type II Slurry seal per Section 37 of State Specifications.

2.7 HERBICIDE OR WEED KILLER

Use a CalTrans approved herbicide from the approved chemical list.

2.8 GEOTEXTILE FABRIC

Use Amoco 2006 or equal.

PART 3 EXECUTION

3.1 PAVEMENT REMOVAL

A. Initially cut asphalt concrete pavement with pneumatic pavement cutter or other equipment at the limits of the excavation and remove the pavement. After backfilling the excavation, saw cut asphalt concrete pavement to the full depth of pavement at a point not less than 9 inches outside the limits of the excavation or the previous pavement cut, whichever is greater, and remove the additional pavement.

B. Saw cut concrete pavement, including cross gutters, curbs and gutters, sidewalks, and driveways, to the full depth of pavement at a point 1 foot beyond the edge of the excavation and remove the pavement.

The concrete pavement may initially be cut at the limits of the excavation by other methods prior to removal and the saw cut made after backfilling the excavation. If the saw cut falls within 3 feet of a concrete joint or pavement edge, remove the concrete to the joint or edge.

C. Make arrangements for and dispose of the removed pavement.

D. Final pavement saw cuts shall be straight along both sides of trenches, parallel to the pipeline alignment, and provide clean, solid, vertical faces free from loose material. Saw cut and remove damaged or disturbed adjoining pavement. Saw cuts shall be parallel or perpendicular to the pipeline alignment or the roadway centerline, unless otherwise shown on contract drawings.

3.2 PAVEMENT INTERFERENCE:

A. At no cost to the owner, the Contractor will be required to relocate or replace any vaults, boxes, posts, or other facilities which must be disturbed for new construction work and which are required for plant operation, or make other arrangements satisfactory to the Engineer. This includes, but is not limited to, raising or lowering elevations of existing facilities to align with new finish grade.

3.3 PAVEMENT INSTALLATION:

New asphalt concrete pavement installation shall be as follows:

Pavement Sections	
AC (inches)	AB (inches)
3.0	8.0

Notes: AC = Asphalt Concrete, AB = Class 2 Aggregate Base (R-Value = 79)

3.4 PAVEMENT REPLACEMENT

Remove and dispose of (dispose off site) all existing AC pavement, all underlying aggregate base, and all subgrade necessary to replace pavement in damaged as a result of this construction project. Repavement shall be based on pavement installation instructions as specified in subsection 3.2, above. Install new section of asphalt concrete pavement, in place of damaged road.

3.5 INSTALLATION

Producing, hauling, placing, compacting, and finishing of asphalt concrete shall conform to Section 39 of the State Specifications. Apply seal coat to all paving except open graded asphalt concrete.

3.6 CONNECTIONS WITH EXISTING PAVEMENT

Where new paving joins existing paving, saw cut the existing surfaces 12 inches back from the joint line full depth. Dispose of waste material offsite. Tack prior to placing the asphalt concrete. Meet lines shall be straight and the edges vertical. Paint the edges of meet line cuts with liquid asphalt or emulsified asphalt prior to placing asphalt concrete. After placing the asphalt concrete, seal the meet line by painting with a liquid asphalt or emulsified asphalt and then immediately cover with clean, dry sand.

3.7 PREPARATION OF SUBGRADE

A. Scarify subgrade to a depth of 12 inches below finished subgrade elevation, uniformly moisture conditioned to 2 percent above optimum and compacted to 95% minimum relative compaction. Shape subgrade to line, grade, and cross section shown in the drawings. The subgrade shall be considered to extend over the full width of the base course.

B. The finished subgrade shall be within a tolerance of 0.05 of a foot of the grade and cross section shown and shall be smooth and free from irregularities and at the specified relative compaction.

3.8 PROOF ROLLING

Proof roll the prepared base material surface to check for unstable areas. Proof rolling shall be accomplished using a water truck or similar equipment with a rear axle load of at least 18,000 pounds with tires inflated to at least 65 psi. Paving work shall begin only after areas have been corrected and are ready to receive paving. The Engineer must be present during proof rolling.

3.9 PLACING AGGREGATE BASE COURSE

Place aggregate base course to a minimum thickness as specified for the roadway. Compact to 95% relative compaction. Install in accordance with Section 26 of the State Specifications.

3.10 COMPACTION OF AGGREGATE BASE AND LEVELING COURSES

Compaction and rolling shall begin at the outer edges of the surfacing and continue toward the center. Apply water uniformly throughout the material to provide moisture for obtaining the specified compaction. Compact each layer to the specified relative compaction before placing the next layer.

3.11 PLACING PRIME COAT

Prime coat shall be installed when warranted by project conditions and as directed by the Engineer. Apply prime coat to the surface of the leveling course of aggregate base at the rate of 0.25 gallon per square yard per Section 39-4.02 in the State Specifications.

3.12 PLACING TACK COAT

Apply tack coat on surfaces to receive finish pavement at the rate of 0.10 gallon per square yard per Section 39-4.02 of State Specifications. Apply tack coat to metal or concrete surfaces that will be in contact with the asphalt concrete paving.

3.13 PLACING ASPHALT PAVING

Install in accordance with Section 39-6 in the State Specifications. Type B mix shall be spread and compacted before temperature of mix drops below 200º F and shall be placed only when the atmospheric temperature is above 50º F.

3.14 COMPACTION OF ASPHALT CONCRETE PAVING

Compact until roller marks are eliminated and a density of 92% minimum to 98% maximum has been attained per ASTM D2041. Compacting equipment shall be vibratory drum rolled or equal

conforming to the provisions of Section 39-5.02, "Compacting Equipment" unless Engineer approved alternative compaction equipment.

3.15 APPLYING SEAL COAT

Apply Slurry seal coat at the rate of 10 to 18 pounds of dry aggregate per square yard.

3.16 JOINTS

A. Where new paving joins existing paving, saw cut the existing surfaces 12 inches back from the joint line full depth. Dispose of waste material offsite. Tack prior to placing the asphalt concrete. Meet lines shall be straight and the edges vertical. Paint the edges of meet line cuts with liquid asphalt or emulsified asphalt prior to placing asphalt concrete. After placing the asphalt concrete, seal the meet line by painting with a liquid asphalt or emulsified asphalt and then immediately cover with clean, dry sand.

B. Place each asphaltic paving layer as continuous as possible to keep the number of joints to a minimum. Create joints between old and new pavement, between successive days work, and where the mixture has become cold (less than 140 degrees F). Make these joints in such a manner as to create a continuous bond between the old and new pavement construction courses. Offset joints in successive, overlaying courses by at least 6 inches.

C. Transverse Joints: If placing of material is discontinued or if material in place becomes cold, make a joint running perpendicular to the direction traveled by the paver. Before placement continues, trim the edge of the previously placed pavement to a straight line perpendicular to the paver and cut back to expose an even vertical surface for the full thickness of the course. When placement continues, position the paver on the transverse joint so that sufficient hot mixture will be spread in order to create a joint after rolling that conforms to the required smoothness. If the temperature of the previously placed pavement material drops below 140 degrees F before paving is resumed, give the exposed vertical face a thin coat of liquid asphalt just before paving is continued.

D. Longitudinal Joints: Coat longitudinal joints that are not completed before the previously laid mixture has cooled to a temperature below 140 degrees F, with liquid asphalt just before paving is continued.

3.17 SURFACE TOLERANCE

A. Finished grades shall not deviate more than 0.01 foot in 12 feet in elevation parallel with the road centerline and 0.02 foot in 12 feet in elevation transverse to the centerline from the grades indicated in the drawings.

B. After paving has been installed and compacted, spray water over the entire paved area. Correct any areas where water collects and does not drain away.

3.18 APPLYING PAINT FOR TRAFFIC AND PARKING LOT STRIPING AND MARKING

Apply in accordance with Section 84 of the State Specifications.

END OF SECTION

SECTION 02601

MANHOLES AND CLEANOUTS

PART 1 GENERAL

1.1 DESCRIPTION

The work of this section consists of the furnishing of materials and constructing therewith new manholes and cleanouts as shown on the drawings.

1.2 RELATED WORK SPECIFIED ELSEWHERE

A. Section 01300 - Submittals

B. Section 01666 - Testing of Gravity Sewer Lines and Manholes

C. Section 02223 - Trenching Backfilling and Compacting

D. Section 02225 - Structure Excavation and Backfill

E. Section 03100 – Concrete

F. Section 07110 – Waterproof Coating

1.3 QUALITY ASSURANCE

Standards, American Association of State Highway and Transportation Officials (AASHTO) and American Society for Testing and Materials (ASTM).

1.4 SUBMITTALS

A. Shop Drawings and catalog cut sheets shall be submitted for manhole, frames and covers, precast manhole bases and sections, joint sealer, cleanout meter box, pressure clean-out covers, and epoxy lining in accordance with Section 01300.

B. For manholes larger than 4’-0” in any dimension, drawings and calculations shall be signed by a Civil or Structural Engineer registered in California. Loads and design criteria shall be

as shown on the contract drawings, specification sections 01610 and 01615, and project Geotechnical Reports. Calculations shall be based on the soil pressures provided in the Geotechnical Reports and specification section 01610.

PART 2 MATERIALS

2.1 FRAMES AND COVERS

A. All castings for manhole frames and covers shall be of tough, uniform quality, gray iron, free from cracks, holes, swells, cold shuts or other defects and be of workmanlike finish. Castings for frames and covers shall conform to the requirements of the "Specifications for Gray Iron Castings," Class 25 (ASTM A48).

B. Horizontal surfaces of manhole cover seats and under surface of the seat cover which rests upon the frame shall be machined. After machining, it shall not be possible to rock any cover after it has been seated in any position in its frame. Manhole frames and covers shall be designed for heavy duty, H-20 traffic loading. All manholes shall be provided with a nominal 24-inch diameter cover unless otherwise noted on the drawings. Manhole frames shall be capable of receiving standard non-shifting manhole extension (riser) rings.

C. Manhole frames and covers shall match the City Standard and manufactured by Phoenix P1090, or equal. The wording in the covers shall include the work "sewer" in the lid.

2.2 PRECAST CONCRETE MANHOLE SECTIONS

Manholes shall be constructed of precast reinforced manhole sections conforming to ASTM C478 and as shown. Precast concrete rings, cones, and flat slabs shall be manufactured by a process that will produce a dense, homogeneous concrete section of first quality. Cement used in all precast sections shall conform to State Specifications "Type II Modified".

2.3 PRECAST MANHOLE BASES

Precast manhole bases as manufactured by Teichert Precast, 8160 Signal Court, Sacramento, CA 95824; Hanson Concrete Products, or equal, may be used, subject to approval.

2.4 PRECAST CONCRETE MANHOLE FLAT LID

A. Designed to meet H-20 loading requirements.

B. Tested in accordance with ASTM C497.

2.5 CONES

All manhole cones shall be eccentric unless otherwise shown on the plans and conform to ASTM designation C478.

2.6 JOINT SEALER

The joint sealer shall be Ram-Nek by K.T. Snyder Company, Inc.; Kent-Seal by Hamilton-Kent, or equal.

2.7 CLEANOUTS

For pedestrian loading (300 psf): Cleanout covers shall be concrete meter box with cover, Brooks No. 36; Christy B9 Utility Box, with B9D lid, or equal.

For traffic loading (H20): Cleanout covers shall be concrete meter box with cover, Brooks No. 3.5-T PB; Christy B1017 utility box with H20 lid, or equal.

2.8 MORTAR

One part Portland cement, 1 part hydrated lime, and 6 parts sand.

2.9 NON-SHRINK GROUT

Shall be non-shrink epoxy type suitable for pressure grouting, Embeco; Master Builders Co., or equal.

2.10 INTERIOR AND EXTERIOR COATINGS

A. Interior: System C, 100% Solids Epoxy, per Specification Section 09900.

B. Exterior: Buried exterior concrete shall be coated with an emulsified asphalt coating, Specification Section 07110.

PART 3 EXECUTION

3.1 SETTING BASES

A. Construct to grades, lines and elevations shown on the drawings or staked in the field. Shape tops of the bases by means of accurate bell-ring forms to receive the barrel section.

Wet setting is not permitted. Joint sealer shall be placed on the first joint after the Engineer has approved the manhole base for stacking. The concrete shall cure a minimum of 24 hours before stacking the barrel sections.

Pour foundations on 12-inches of compacted crushed rock wrapped in filter fabric. See section 02200 and standard manhole details.

B. Precast bases shall be placed on 12-inches of compacted crushed rock wrapped in filter fabric. See section 02200 and standard manhole details.

C. Pipe Stubs shall be built into the structures as shown on the plans. The outer ends shall be sealed securely by a removable stopper of the same material as the branch.

3.2 SETTING PRECAST SECTIONS

Precast-reinforced concrete sections shall be set so as to be vertical and with sections in true alignment. Joints shall be primed and made with sealer applied in strict accordance with the manufacturers printed instructions.

3.3 FIELD CONNECTIONS

Openings for field connections shall be made with a motor driven cutting tool which will provide a smooth round opening no more than 3 inches larger than the outside diameter of the pipe being connected. Jack hammers and chipping hammers will not be allowed. Seal field connections with non-shrink grout.

3.4 INTERIOR DROPS

Install interior drops as detailed on the plans.

3.5 INVERT CHANNELS

Smooth and semi-circular in shape conforming to the inside of the adjacent sections. Make changes in flow direction by a smooth curve of radius as large as permitted by manhole size. Make changes in size and grade gradually and evenly. See plans for details.

3.6 SETTING FRAMES AND COVERS

Frames and covers shall be set as detailed on the plans for various locations.

3.7 CLEANOUTS

Installation of cleanouts shall be as detailed on the drawings.

3.8 EPOXY MANHOLES AND WET WELLS

As schedule herein and other locations designated on the contract drawings shall be epoxy lined. Sewer manholes requiring an epoxy lining shall first pass a vacuum test (water testing will not be allowed) and shall then be constructed as follows:

A. The exterior of the manhole, wet well, etc. shall be coated with an asphaltic material and wrapped in 8 mils polyethylene prior to backfilling.

B. All voids and imperfections in the interior of the manhole shall be mortared or "sacked" smooth with a cement paste composed of 50% Portland cement and 50% sand. The mortar mixture shall be manually worked into the dampened surface with sufficient pressure to completely fill voids and imperfections. The surface shall then be finished smooth. This process shall be continued until the entire manhole surface (base, barrel, cone, neck, and joints) is smooth and free of imperfections.

C. Upon receiving the Engineer's approval of the sacking, the outlet channel(s) of the manhole to be epoxied and the first upstream manhole shall be mechanically plugged to prevent water flow. The newly sacked manhole shall cure for a period of 28 days. A visqueen test for the absence of moisture may be required by the Engineer.

D. The epoxy lining may be applied after the 28 day curing period has ended. An accepted method of epoxy application is as follows:

1. Mask off the metal frame.
2. Sandblast the interior concrete surfaces of the sewer manhole.
3. Apply a sealer/primer and allow to cure per the manufacturer's recommendations. Application may be withheld if, in the opinion of the Engineer, the walls of the manhole exceed the recommended moisture content.
4. Apply an approved epoxy to obtain a minimum thickness of 80 mils and allow to cure per the manufacturer's recommendations.
5. Verify the thickness and adherence of the coating samples, to the satisfaction of the Engineer by submittal and testing of samples by an approved lab and complying with ASTM Standards.
6. Repair the sampled areas and allow the repairs to cure.
7. "Spark test" the entire epoxy surface area. The electrode shall provide a minimum of 10,000 volts. Areas failing the spark test shall be removed, repaired, and retested.
8. After approval from the Engineer, remove the masking from the metal frame and use Sika Flex (or approved equal) sealant to caulk the transition joint between the epoxy coating and the metal frame.
9. Use Sika Flex (or approved equal) sealant at the concrete/pipe interface.
10. Remove the plugs.

E. The following shall receive a lining and coating as specified above:

1. Drop manholes;
2. Septage drain pump station wet well
3. Manholes on septage/wastewater service;
4. Manholes on sludge service.

3.9 MANHOLE TESTING

A. Perform testing in the Engineer's presence prior to backfill and interior coating. Notify Engineer at least 48 hours prior to testing.

B. Sewer manholes shall be tested in accordance with the requirements of Section 01666.

END OF SECTION

SECTION 03071

EPOXIES

PART 1 GENERAL

1.1 SUMMARY

Section Includes:

A. Epoxy.

B. Epoxy gel.

C. Epoxy bonding agent.

1.2 RELATED SECTIONS

Section 03072 - Epoxy Resin/Portland Cement Bonding Agent.

1.3 REFERENCES

American Society for Testing and Materials (ASTM):

A. D638 - Standard Test Method for Tensile Properties of Plastics.

B. D695 - Standard Test Method for Compressive Properties of Rigid Plastics.

C. D790 - Standard Test Methods for Flexural Properties of Unreinforced and Reinforced Plastics and Electrical Insulating Materials.

1.4 SYSTEM DESCRIPTION

Performance Requirements:

A. Provide epoxy materials that are new and use them within shelf-life limitations set forth by manufacturer.

B. Perform and conduct work of this Section in neat orderly manner.

1.5 SUBMITTALS

A. Product Data: Submit manufacturer's data completely describing epoxy materials.

B. Quality Control Submittals:

1. Manufacturer's installation instructions.

PART 2 MATERIALS

2.1 MATERIALS

A. Epoxy: Water-insensitive 2-part type low viscosity epoxy adhesive material containing 100 percent solids and meeting or exceeding following characteristics when tested in accordance with standards specified: Manufacturers: One of the following or equal:

1. Master Builders, Inc., Concressive Standard LVI.

2. Sika Chemical Corp., Sikadur 35 Hi-Mod LV.

Physical Characteristic	Test Method	Required Results
Tensile Strength	ASTM D638	8,000 pounds per square inch minimum at 14 days and 77 degrees Fahrenheit cure.
Flexure Strength	ASTM D790	11,000 pounds per square inch minimum at 14 days and 77 degrees Fahrenheit cure.
Compressive Strength	ASTM D695	16,000 pounds per square inch minimum at 24 hours and 77 degrees Fahrenheit cure.
Bond Strength	--	Concrete shall fail before failure of epoxy.
Gel Time for 5 Mil Film	--	Four hours maximum at 77 degrees Fahrenheit.
Elongation	ASTM D638	1 percent minimum at 14 days and 77 degrees Fahrenheit.

B. Epoxy Gel: Manufacturers: One of the following or equal:

1. Sika Chemical Corp., Sikadur 31, Hi-Mod Gel.

C. Epoxy Bonding Agent: Manufacturers: One of the following or equal:

1. Master Builders, Inc., Concressive 1001 Liquid LPL.

2. Sika Chemical Corp., Sikadur 32, Hi-Mod.

3. If increased tack time is required for concrete placement, epoxy resin -Portland cement bonding agent as specified in Section 03072 may be used instead of epoxy bonding agent.

D. Non-Shrink Epoxy Grout

1. ASTM C1107, Army COE CRDC 621, Grade B and C.

a. Fluid consistency over a range of 45 degrees to 95 degrees F over a 30 minute working time.

2. Manufacturers

a. Master Builders, Master-Flow 928 Epoxy Grout or equal.

PART 3 EXECUTION

3.1 INSTALLATION

A. Install and cure epoxy materials in accordance with manufacturer's installation instructions.

B. Epoxy:

1. Apply in accordance with manufacturer's installation instructions.

C. Epoxy Gel:

1. Apply in accordance with manufacturer's installation instructions.

2. Use for vertical or overhead work, or where high viscosity epoxy is required.

3. Epoxy gel used for vertical or overhead work may be used for horizontal work.

D. Epoxy Bonding Agent:

1. Apply in accordance with manufacturer's installation instructions.

2. Bonding agent will not be required for filling form tie holes or for normal finishing and patching of similar sized small defects.

END OF SECTION

SECTION 03072

EPOXY RESIN/PORTLAND CEMENT BONDING AGENT

PART 1 GENERAL

1.1 SUMMARY

Section Includes: Epoxy resin/portland cement bonding agent.

1.2 REFERENCES

A. American Society for Testing of Materials (ASTM):

1. C109 - Standard Test Method for Compressive Strength of Hydraulic Cement Mortars (Using 2-in. or [50-mm] Cube Specimens).
2. C348 - Standard Test Method for Flexural Strength of Hydraulic-Cement Mortars.
3. C496 - Standard Test Method for Splitting Tensile Strength of Cylindrical Concrete Specimens.
4. C882 - Standard Test Method for Bond Strength of Epoxy-Resin Systems Used With Concrete By Slant Shear.

B. Federal Highway Administration (FHWA):

1. Program Report Number: FHWA/RD 86/193.

PART 2 MATERIALS

2.1 MANUFACTURERS

A. Sika Corporation, Lyndhurst, New Jersey, Sika Armatec 110.

B. Substitutions: The use of other than the specified product will be considered providing the Contractor requests its use in writing to the Engineer. This request shall be accompanied by:

1. A certificate of compliance from an approved independent testing laboratory that the proposed substitute product meets or exceeds specified performance criteria, tested in accordance with the specified test standards.

2. Documented proof that the proposed substitute product has a one year proved record of performance of bonding portland cement mortar/concrete to hardened portland cement mortar/concrete, confirmed by actual field tests and fives successful installations that the Engineer can investigate.

2.2 MATERIALS

Epoxy Resin/Portland Cement Adhesive:

A. Component "A" shall be an epoxy resin/water emulsion containing suitable viscosity control agents. It shall not contain butyl glycidyl ether.

B. Component "B" shall be primarily a water solution of a polyamine.

C. Component "C" shall be a blend of selected portland cements and sands.

D. The material shall not contain asbestos.

E. PERFORMANCE CRITERIA

F. Properties of the Mixed Epoxy Resin/Portland Cement Adhesive:

1. Pot Life: 75 to 105 minutes.

2. Contact Time: 24 hours.

3. Color: Dark gray.

G. Properties of the Cured Epoxy Resin/Portland Cement Adhesive:

1. Compressive Strength in Accordance with ASTM C109:

a. One Day: 810 pounds per square inch minimum.

b. Seven Days: 6,000 pounds per square inch minimum.

c. Twenty-Eight Days: 8,000 pounds per square inch minimum.

2. Splitting Tensile Strength in Accordance with ASTM C496:

a. Twenty-Eight Days: 540 pounds per square inch minimum.

3. Flexural Strength:

a. 1,100 pounds per square inch minimum in accordance with ASTM C348.

4. Bond Strength in Accordance with ASTM C882 Modified at 14 Days:

   a. Zero Hours Open Time: 1,900 pounds per square inch minimum.

   b. Twenty-Four Hours Open Time: 1,500 pounds per square inch minimum.

5. The epoxy resin/portland cement adhesive shall not produce a vapor barrier.

6. Material must be proven to prevent corrosion of reinforcing steel when tested under the procedures as set forth by the Federal Highway Administration Program Report Number FHWA/RD86/193. Proof shall be in the form of an independent testing laboratory corrosion report showing prevention of corrosion of the reinforcing steel.

PART 3 EXECUTION

3.1 INSTALLATION

A. Mixing the Epoxy Resin: Shake contents of Components "A" and Component "B". Empty all of both components into a clean, dry, mixing pail. Mix thoroughly for 30 seconds with a jiffy paddle on a low-speed with 400 to 600 revolutions per minute drill. Slowly add the entire contents of Component "C" while continuing to mix for a minimum of 3 minutes and until uniform with no lumps. Mix only that quantity that can be applied within its pot life.

B. Placement Procedure:

   1. Apply to prepared surface with stiff-bristle brush, broom, or "hopper type" spray equipment:

      a. For Hand Applications: Place fresh, plastic concrete/mortar while the bonding bridge adhesive is wet or dry, up to 24 hours.

      b. For Machine Applications: Allow the bonding bridge adhesive to dry for 12 hours minimum.

C. Adhere to all limitations and cautions for the epoxy resin/portland cement adhesive in the manufacturers current printed literature.

3.2 CLEANING

Leave finished work and work area in a neat, clean condition without evidence of spillovers onto adjacent areas.

END OF SECTION

SECTION 03100

CONCRETE

PART 1 GENERAL

1.1 DESCRIPTION

This section describes the submittal, material, installation, and testing requirements for furnishing and placing formwork, reinforcement, waterstops, and concrete. It also describes finishing and curing requirements, placement tolerances, and testing and repair procedures.

Except as otherwise provided herein, the design and erection shall be in accordance with the applicable provisions of the ACI 318 and 301, edition as referenced in the governing CBC.

1.2 RELATED WORK SPECIFIED ELSEWHERE

A. Section 01300 - Submittals

B. Section 02200 - Earthwork

C. Section 02225 - Structure Excavation & Backfill

D. Section 03071 - Epoxies

E. Section 03072 – Epoxy Resin/Portland Cement Bonding Agent

F. Section 03480 - Precast Utility Vaults and Catch Basins

G. Section 03700 - Concrete Saw Cutting and Core Drilling

H. Section 05120 - Structural Steel

I. Section 05500 - Metal Fabrications

J. Section 07110 - Waterproofing

K. Section 09900 - Painting

1.3 GOVERNING CODES AND STANDARDS

Furnish and install concrete in conformance with the current following standards, all standards editions are based on referenced CBC adoption:

A. ACI 301 – Specifications for Structural Concrete

B. ACI-318 - Building Code Requirements for Structural Concrete

C. ACI-350 - Code Requirements for Environmental Engineering Concrete Structures

D. ACI - American Concrete Institute, Manual of Concrete Practice (MCP), Latest Edition, Applicable Standards

E. CRSI - Concrete Reinforcing Steel Institute

F. SS90 - Caltrans Standard Specification Section 90

G. ASTM - Applicable Standards

H. CCRL - Cement and Concrete Reference Laboratory

I. SEAOC - Structural Engineers Association of California

J. CBC – 2022 California Building Code

1.4 SUBMITTALS: In accordance with Section 01300.

A. Formwork Shop Drawings

1. Before starting concrete work, submit shop drawings of formwork showing size and thickness of members, dimensions and locations of openings and blockouts, vertical limits of concrete placements, horizontal lifts, plywood form pattern, proposed construction joints, form tie elevations and details, and any architectural features to be cast into the concrete. Incorporate the work of all trades.

2. This review is for the purpose of assessing the Contractor's interpretation of the Contract Documents and will not include any considerations of the availability, suitability, constructability, or safety of concrete forming system.

3. Drawings and structural calculations for all concrete other than slabs on grade shall be submitted for record purposes only and not for review or approval. Formwork drawings and structural calculations shall be signed and sealed by a Civil or Structural Engineer registered in California. Where superplastizers are used with Engineer's approval, design formwork to resist full liquid head.

4. The Contractor shall be solely responsible for the design, installation, use, and safe removal of all formwork. The formwork design shall comply with all governing codes, all Federal, State, and local ordinances; and generally accepted engineering principles.

5. Submit drawings showing the installation and removal sequence and procedures to be used. Include weight of formwork, assumed construction load, proposed minimum concrete strength for stripping of formwork, size and type of reshores, reshore spacing pattern, number of levels of reshores, and assumed load per reshore at each level.

B. Concrete

1. Prepare and submit proposed mix designs along with trial batch test results with a minimum of three test cylinders or a series of production compression tests with a minimum of 20 sets of test data within the last year. All test results shall be signed by a laboratory currently certified by CCRL and actively participating in their sample proficiency program verifying that the components and final products meet the requirements of ACI MCP and these specifications. Mix designs shall include fine, coarse, and combined aggregate gradations.

2. Provide certificates that the cement used complies with ASTM C150 and these specifications.

3. Provide delivery tickets for ready-mix concrete or weighmaster certificates per ASTM C94, including cement weights, aggregate size, the amount of water added at the plant and record of pours. Record the amount of water added on the job on the delivery ticket. Water added at the plant shall account for moisture in both the coarse and fine aggregates.

4. Provide certificate of compliance from the manufacturer of the concrete admixtures with these specifications.

5. Submit concrete drying shrinkage test data along with mix design submittals for concrete with required 28 day compressive strength of 4000 psi and above. Test shall comply with ASTM C157 as modified by SEAOC. The maximum limit for drying shrinkage shall be 0.045% for mix design and 0.058% for field cast after 28 days of drying after the wet cure period.

C. Reinforcing Steel Shop Drawings

1. Before starting concrete work, submit drawings complying with requirements of ACI MCP (latest edition), detailed in accordance with ACI SP66, and adapted to the proposed placement schedule, showing size, dimension, bending, placing, and construction joint details. Submit drawing showing locations of all construction joints. Submit type, size, and location of all slab and bar supports. Submit all reinforcement for a particular structure as a single complete submittal package. Shop fabrication shall not begin until corrected drawings bearing the Engineer's review stamp are returned in accordance with Section 01300.

2. The Contractor shall be wholly and completely responsible for the accuracy of the lists and for furnishing and placing reinforcing steel in accordance with the details shown on the plans and as specified.

3. Submit certified copies of mill test reports for each lot or heat of all reinforcing steel.

D. Shoring: If shoring the structure is required, submit drawings and structural calculations signed and sealed by a Civil or Structural Engineer registered in the State of California showing anticipated loads, members, connections, and anchorage of the proposed shoring system. The submittal is for record purposes only and not for review or approval.

E. Concrete Joints, Waterstops, and Epoxy Bonding Compound

1. Submit manufacturer's literature, catalog data, and statement of compliance with referenced standard and specifications for materials specified herein.

2. Submit material samples of PVC waterstops.

3. Provide technical data sheets for the Contractor's personnel and the Owner covering joint preparation, priming, and sealant materials application.

4. Submit layouts for construction and expansion joints and proposed pour sequence. Unless otherwise noted, maximum length or width of one pour is 30 feet and a maximum area of 900 sf. Where walls meet at a corner, the maximum length of wall from the corner to a construction or expansion joint is 20 feet.

5. Provide epoxy bonding compound manufacturer's specific instructions for use. Provide manufacturer's certifications as to suitability of product to meet job requirements with regard to surface preparation, pot life, set time, vertical or horizontal application, corrosive and/or submerged environments and forming restrictions.

PART 2 MATERIALS

2.1 CONCRETE

A. General: Materials shall conform to Standard Specifications, this specification, and as approved by the Engineer.

B. Portland Cement: Use domestic portland cement that conforms to Standard Specifications "Type II Modified/Type V". Use only one brand of cement in any individual structure. Do not use cement that is damaged, partially set, lumpy, or caked. Reject the entire contents of the sack or container that contains such cement. Do not use salvaged or reclaimed concrete.

C. Water: Water for washing aggregates and for mixing and curing concrete shall be clean, free from oil, acid, alkalies, vegetable matter, or other deleterious substances. No salt or sea water or water containing excessive amount of sodium sulphate, magnesium sulphate or magnesium chloride shall be used.

D. Coarse Aggregate: The coarse aggregate shall consist of clean, hard, dense, tough and durable natural gravel, crushed gravel, or crushed rock, conforming to Standard Specifications. It shall be free from oil, organic matter or other deleterious substances.

E. Fine Aggregate: Fine aggregate shall consist of hard, durable, uncoated natural sand or other approved material, conforming to Standard Specifications. It shall be free from oil or other deleterious substances.

F. Fly Ash: Fly ash shall conform to ASTM C618, Class F or N, except that the loss on ignition shall be limited to 1%.

G. Admixtures

1. A water reducing agent such as Pozzolith, WRDA, or equal shall be used in all concrete. The admixture shall conform to ASTM C494, Type A. Proportioning and mixing shall be as recommended by the manufacturer.

2. Admixtures causing retarded/accelerated setting of cement in concrete shall not be used.

3. Air entraining admixtures with demonstrated compatibility with the concrete mix shall be used as required as a moderate addition to the water reducing agent to obtain the specified percent air in the resultant concrete. The Contractor shall submit data verifying that the admixtures are compatible with the mix. Air-entraining admixture shall conform to ASTM C260.

4. Shrinkage-reducing admixtures may be allowed to minimize the drying shrinkage of concrete. Manufacturer's recommendation's should be strictly followed with regard to dosage and suitability for use in freezing-and-thawing environments.

2.2 REINFORCING

A. Reinforcing Steel Bars: Deformed Bars shall be in accordance with ASTM A706 or A615 (conforming to the ductility requirements of A706), including Supplementary Requirement S1, Grade 60, and free from rust, scale, oil, or frost. No. 3 bars may be Grade 40.

B. Welded Wire Fabric: Shall be of gauge and mesh size shown and shall meet the requirements of ASTM A185 for plain wire fabric or ASTM A497 for deformed wire fabric. Wire fabric shall be free from rust, scale, oil, and frost.

C. Reinforcement supported from formwork shall rest on Class 1 (plastic protected) bar supports, as specified in "Manual of Standard Practice" by the Concrete Reinforcing Steel Institute (CRSI), Chapter 3.

Reinforcement supported from the ground shall rest on 3-inch high precast concrete blocks not less than 4 inches square, and having a compressive strength equal to the specified compressive strength of the concrete being placed. The precast blocks shall have been cured as specified for concrete and shall contain soft steel wires embedded therein for fastening to the reinforcing.

D. Details of concrete reinforcement not shown on drawings shall be in accordance with CRSI Manual of Standard Practice.

2.3 REINFORCING BAR COUPLERS

Reinforcing bar couplers shall be internally threaded to receive future threaded reinforcing bars or couplers. The couplers shall be cold-forged to the reinforcing bars or shall be internally threaded to receive threaded reinforcing bars. The ends of the reinforcing bars shall be upset before threading. Reinforcing bars not upset before threading may be used provided the bar size is increased one bar size. The entire assembly shall be capable of developing, in tension and compression, at least 125 percent of the specified yield strength of the bar. Provide plastic screw-caps to protect internal coupler threads. The couplers shall be of Lenton or equal.

2.4 PATCHING GROUT (Dry Pack)

Patching grout shall consist of neat Portland cement, water, and sand passing a No. 8 sieve. The ratio of cement to sand shall be one part Portland cement to two parts sand. Add sufficient water to form a damp formable consistency.

2.5 FORM RELEASE

Form release shall be non-staining and in accordance with Corps of Engineers Specification CE 204 Section 3.03K. Burke Release #1 V.O.C. manufactured by Edoco, or equal.

2.6 NONSHRINK GROUT

Nonshrink grout shall conform to the ASTM-C1107 for Nonshrink Grout, and to these specifications. Use a nongas-liberating type, cement base, premixed product requiring only the addition of water for the required consistency. Grout shall be Masterflow 713, as manufactured by Master Builders Company, Cleveland, OH, Upcon by Upco Co., Cleveland, OH, or equal.

2.7 EPOXY GROUT

See Section 03071 for material requirements.

2.8 JOINT SEALANT

Joint sealant shall be a single component, gray, nonstaining, nonsagging, gun-grade polyurethane sealant, and shall meet ASTM C920 for vertical and horizontal joints and, in addition, is recommended by the manufacturer for continuous immersion in water. Sealant shall be MasterSeal NP1 by BASF, Sikaflex-1a by Sika Corporation, or equal.

2.9 BACKING ROD FOR EXPANSION JOINTS

Backing rod shall be an extruded closed-cell polyethylene foam rod compatible with joint sealant and as recommended by sealant manufacturer.

The rod shall be ¼-inch larger in diameter than the joint width. Where possible, provide full length sections for the joint and minimize splices. Apply backing rod and bond breaker tape in expansion joints.

2.10 BOND BREAKER TAPE

Bond breaker tape shall be an adhesive-backed glazed butyl or polyethylene tape which will adhere to the premolded joint material or concrete surface. The tape shall be the same width as the joint. The tape shall be compatible with the sealant.

2.11 EXPANSION JOINT FILLERS (Walkways and Sidewalks)

Asphalt impregnated, premolded type, ASTM D1751, ½-inch by depth of slab minus ½-inch.

2.12 PREMOLDED JOINT FILLER

Joint filler shall be preformed, non-extruded type constructed of closed-cell neoprene conforming to ASTM D1752, Type I, as manufactured by W. R. Grace Company of Cambridge, MA; W. R. Meadows, Inc., Elgin, IL; or equal.

2.13 STEEL EXPANSION JOINT DOWELS

Steel expansion joint dowels shall conform to one of the following:

A. Epoxy coated steel bar dowels with a 12-mil coating thickness. Steel bar dowels shall conform to ASTM A36 or ASTM A615, plain rounds, Grade 60. Epoxy coating shall be in conformance with ASTM A775; or,

B. Stainless-steel bar dowels conforming to ASTM A276, Type 302.

2.14 EXPANDED POLYSTYRENE FILLER BLOCK

Expanded polystyrene filler blocks for future construction and expansion joints shall be Styrofoam SM brand as manufactured by Dow Chemical Company, or equal.

2.15 PREFORMED CONTROL JOINT

Preformed control joint shall be a one-piece, flexible, PVC joint former, such as Kold-Seal Zip-Per Strip KSF-150-50-50, manufactured by Vinylex, Corp., Knoxville, Tennessee, or a one-piece steel strip with preformed groove, such as Keyed Kold Retained Kap, manufactured by Burke Concrete Accessories, Inc., San Mateo, CA, or equal. Provide the preformed control joint material in full length unspliced pieces.

2.16 PVC WATERSTOPS

Waterstops shall be extruded from a PVC compound and shall be lock-rib, center-bulb or flat-strip type as manufactured by Greenstreak, Specon, Inc., JPSpecialties, Inc., or equal. Waterstop shall comply with Corps of Engineers Specification CRD-C-572. Waterstops shall be of the dimensions and profile as shown in the drawings.

Waterstops shall be extruded from virgin elastomeric PVC compound, resistant to chemical action with Portland cement, alkalies, acids, and not affected by mildew or fungi. It shall show no effect when immersed for 10 days in a 10% solution of sulfuric or hydrochloric acid, saturated lime solution or salt water. Waterstops shall be such that any cross section will be dense, homogeneous, and free from porosity and other imperfections. Waterstops shall be symmetrical in shape. When tested in accordance with Federal Standard No. 601, the material shall meet the following minimum requirements:

Minimum Requirement	ASTM Specification
Tensile Strength, 2000 psi	D638
Shore hardness A15, 60-80	D2240
Ultimate elongation, 300%	D638
Water absorption, 0.15	D570
Specific gravity, 1.3	D792
Stiffness in flexure, 700 psi	D747
Low temperature brittleness, -35 degrees F	D746
Tear Resistance, 300 lb/in	D624

2.17 BENTONITE WATERSTOPS

Where identified on the pipe penetration drawings, bentonite waterstops shall be bentonite strips, Volclay “Water Stop-RX”, or equal. Bentonite waterstops shall not be used for structural construction joints unless approved by the Engineer.

2.18 FLOOR HARDENER

Liqui-Hard by W.R. Meadows; Lapidolith by Sonneborn Building Products, Division of Contech, Inc., Minneapolis, Minnesota, or equal. Hardener shall be compatible with curing method used.

2.19 ADHESIVE ANCHORS

Anchors called out on Contract Drawings as epoxy anchor, adhesive anchor or chemical anchors shall be stainless steel threaded rods, nuts, and washers (per respective ICC-ES reports) or Grade 60 rebar for epoxy dowels in two component resin adhesive. Adhesive shall be Simpson Set-3G Epoxy, HILTI RE 500-V3, or equal. Adhesive anchors shall meet the cracked section requirements of CBC 2022 and be suitable for submerged and corrosive environments.

2.20 STRUCTURAL ANCHORS

A. Anchors called out on the Contract Drawings as expansion anchors (EA), expansion bolt (EB), or wedge anchor (WA) shall be stainless steel ITW Redhead Trubolt+, HILTI Kwikbolt TZ, or equal.

B. Adhesive anchors may be substituted for structural anchors if approved by the Engineer.

2.21 CURING MATERIALS

A. Sheet Materials: ASTM C171, 4 mil polyethylene film or waterproof paper.

B. Spray Applied Membrane Forming Liquids: Meet or exceed requirements of ASTM C309, Type 1-D, Class B, except that the loss of water, when tested, shall be not more than 0.15 kilograms per square meter in 24 hours, nor more than 0.45 kilograms per square meter in 72 hours. Shall be a water-base, resin cure with fugitive dye, meeting California Air Regulation Board requirements. Products by Burke, W.R. Meadows, Inc., or equal.

Material shall only be allowed on concrete not scheduled to be coated.

C. Burlap Mats: Burlap mats shall conform to AASHTO M182.

2.22 FORM TIES

A. Notify Engineer 48 hours prior to placement of concrete. Concrete shall not be placed until Engineer has reviewed and approved the placement of all reinforcing steel.

B. Locate form ties on exposed surfaces in a uniform pattern or as indicated on the drawings. Construct form ties so that the ties remain embedded in the concrete except for a removable portion at each end and do not leave an open hole through the concrete. Form ties shall have conical or spherical type inserts with a maximum diameter of 1 inch. Construct form ties so that no metal is within 1 inch of the concrete surface when the forms, inserts, and tie ends are removed. Do not use wire ties. Ties shall withstand all pressures and maintain forms within acceptable deflection limits.

C. Flat bar ties for panel forms shall have plastic or rubber inserts having a minimum depth of 1 inch and sufficient dimensions to permit patching of the tie hole.

D. Ties for water-holding structures or dry structures with access, such as basements or pipe galleries that are below finish grade shall have an integral steel waterstop that is tightly and continuously welded to the tie. The waterstop shall be at least two times larger in the area than the tie cross-sectional area and shall be oriented perpendicular to the tie and symmetrical about the center of the tie. Construct the ties to provide a positive means of preventing rotation or disturbance of the center portion of the tie during removal of the ends.

E. Tapered form ties are allowed for dry structures only that are above finish grade and shall be tapered through-bolts at least 1 inch in diameter at the smallest end or through-bolts that utilize a removable tapered sleeve of the same minimum size.

2.23 BONDING AGENT

See Section 03071 for material requirements.

2.24 CONCRETE GROUT

Grout shall have a minimum compressive strength of 4000 psi at 28 days and shall consist of Portland cement, fine aggregate, coarse aggregate, and air entraining agent, and water which shall conform to the requirements of Section 90 of the Standard Specifications, as modified herein. Grout shall contain a minimum of seven sacks (658 pounds of Portland cement) per cubic yard. Maximum slump shall be four (4) inches. Coarse aggregate shall be 3/8-inch pea gravel. Grading shall be set forth in Section 90 of the Standard Specifications.

PART 3 EXECUTION

3.1 SAFETY REGULATIONS

Comply with all applicable safety regulations including the requirements of "The Construction Safety Orders" of the State of California and the provisions of OSHA.

3.2 CONCRETE MIX COMPOSITION

A. Concrete Composition: Concrete shall consist of Portland cement, fine aggregate, coarse aggregate, an air entraining agent, and water which shall conform to the requirements of Section 90 of the Standard Specifications, and as modified herein.

B. Submittal of Proposed Mix Design

1. The proposed mix design, with samples of rock aggregate and any admixtures to be used, shall be submitted in accordance with Section 01300.

2. Samples of fine and coarse aggregate and any admixtures to be uses in concrete, shall be submitted along with the concrete mix design submittal.

3. The grading or proportioning of the fine and coarse aggregates in the mix shall be changed whenever necessary or desirable, in the opinion of the Engineer, to secure the required economy, workability, density, impermeability or strength, and no additional compensation because of such changes shall be allowed.

C. Concrete Designations: Concrete will be designated as shown in the table below and subsequent sections.

Type of Use	Concrete Class	Maximum Aggregate Size (inches)	Minimum Compression Strength at 28 Days (psi)	Slump (inches)	Max. Water Cementitious Ratio (by weight)	Entrained Air Required (%)
LIQUID CONTAINING STRUCTURES:						
Slabs & Footings on grade	1	1 ½	4000	3 max	0.45	4-½ ± 1-½
Vertical Wall Sections and Columns	1	1	4000	4 max	0.45	4-½ ± 1-½
Mass Concrete and Unformed Slopes	1	1	4000	2 max	0.45	4-½ ± 1-½
OTHER STRUCTURAL CONCRETE:						

Interior and Exterior Slabs, Footings, Caissons, and Pipe Encasements	1	1 ½	4000	3 max	0.45	3 ± 1-½
Vertical Wall Sections and Columns	1	1	4000	4 max	0.45	3 ±1-½
Curbs, Gutters, Sidewalks, Mowing Strips, Fence Posts	3	1	2500	4 max	0.55	3 ±1-½
Thrust Blocks, Concrete Fill	4	1	2000	4 max	0.60	-----
Concrete Lined Channels	2	¾"	3000	3 ½	0.60	5 + 1

D. Concrete Class:

1. Class 1 concrete shall contain a minimum of 675 pounds of cementitious material per cubic yard.

2. Class 2 concrete shall contain a minimum of 590 pounds of cementitious material per cubic yard.

3. Class 3 concrete shall contain a minimum of 505 pounds of cementitious material per cubic yard.

4. Class 4 concrete shall contain a minimum of 420 pounds of cementitious material per cubic yard.

5. Fiberous reinforced concrete shall contain a minimum of 590 pounds of cementitious material per cubic yard. Cementitious material shall be as defined in Section 90 of Standard Specifications.

E. Concrete Compressive Strength

1. Whenever the 28-day compressive strength shown on the plans is 3,500 pounds per square inch or greater, the concrete shall be considered to be designated by compressive strength.

2. When the concrete is designated by compressive strength the mix proportions shall be determined and concrete shall be furnished which contains not less than 675 pounds and not more than 800 pounds of cementitious material per cubic yard of concrete and which conforms to the strengths shown on the plans or as specified.

3. Batch proportions shall be adjusted as necessary to produce concrete having the specified cement factor.

F. Fly Ash: The Contractor may at his option substitute up to 15 percent by weight of fly ash for the cementitious material required herein except where high early strength is specified or where the use of fly ash is prohibited.

G. Aggregate Sizing

1. Coarse aggregate maximum grading shall be as specified in the table above. Grading shall be as set forth in Section 90 of the Standard Specifications.

2. Where the spacing of reinforcing bars is such as to result in minimum clearances, or in other locations where in the opinion of the Engineer difficulties may be experienced in pouring concrete with 1½-inch maximum size aggregate, concrete with 1-inch maximum size aggregate shall be used. In this event the air content shall be increased by ½ %.

3.3 MEASURING MATERIALS

Materials shall be measured by weighing except as otherwise specified or where other methods are specifically authorized by the Engineer. Scales shall be approved by the Engineer and have been certified by the local Sealer of Weights and Measures within one year of use. Each size of aggregate and the cement shall be weighed separately. The accuracy of all weighing devices shall be such that successive quantities can be measured to within one percent of the desired amount. Cement in standard packages (sacks) need not be weighed, but bulk cement and fractional packages shall be weighed.

3.4 CONCRETE MIXING AND DELIVERY

A. All concrete shall be machine mixed at the site, or delivered to the site by transit mixers under conditions approved by the Engineer.

B. No concrete shall be placed in the work after it has started to set. No concrete can be placed more than one hour after it has been mixed.

C. If transit mix is used, the rate of delivery, haul time, mixing time and hopper capacity shall be such that all mixed concrete delivered shall be placed in the forms within one hour from the time of introduction of cement and water to the mixer. All concrete shall be kept continuously agitated until discharged in the hopper at the job site.

D. Ready-mixed concrete shall be batched, mixed, and transported in accordance with ASTM C94 and and ACI 301. Plant equipment and facilities shall conform to the "Check List for Certification of Ready Mixed Concrete Production Facilities" of the National Ready Mixed Concrete Association.

E. Trucks rejected based on time limit or required test(s) failure shall not return with new concrete to the jobsite within three hours unless approved by the Engineer.

3.5 CONCRETE HANDLING AND PLACEMENT

A. Excavations and Formwork

1. Excavations shall be kept free from water while concrete is being placed, cured and finished therein. Fresh concrete shall be protected at all times from running water.

2. The order of placing concrete in all parts of the work shall be acceptable to the Engineer. In order to minimize the effects of shrinkage, the concrete shall be placed in units as bounded by construction joints shown. The placing of units shall be done by placing alternate units in a manner such that each unit placed shall have cured at least 14 days before the contiguous unit or units are placed.

3. Before placing concrete, all form work shall be cleaned of dirt and construction debris, water-drained, reinforcement securely and properly fastened in its correct position, forms at construction joints re-tightened, all ducts, sleeves, hangers, pipes, conduits, bolts, wires, etc., installed.

4. No concrete shall be placed before the forms and all work that is to be embedded have been set and observed by the Engineer.

5. All formwork and scaffolding shall comply to OSHA safety standards as given in Section 3.1.

B. Concrete Placement

1. Notify Engineer 48 hours prior to placement of concrete. Concrete shall not be placed until Engineer has reviewed and approved the placement of all reinforcing.

2. The working schedule and schedule of placement shall be as shown on the plans and worked out in conjunction with the Engineer. The schedule shall be worked out prior to commencement of work, and shall be rigidly adhered to.

3. Concrete shall be conveyed from the mixer to the place of final deposit as rapidly as practicable by methods which will prevent the separation or loss of the materials. The concrete shall be deposited in the forms as nearly as practicable in its final position to avoid rehandling. Use of vibrators for extensive shifting of the mass of fresh concrete will not be permitted.

4. Concrete shall be placed and consolidated by methods that will not cause segregation of the aggregates and will result in a dense homogeneous concrete which is free of voids and rock pockets. All concrete shall be used while fresh and before it has taken an initial set. Retempering any partially hardened concrete with additional water will not be permitted.

5. Surfaces on which concrete is to be placed shall be dampened with water immediately before placing concrete.

6. Concrete shall not be deposited on frozen or ice-coated ground nor on ice-coated forms, reinforcing steel, embedded items or construction joints.

7. Where pavement or surfacing is to be placed around or adjacent to manholes or drainage inlets which will be located within traffic lanes, such structures shall not be constructed to final grade until after the pavement or surfacing has been placed around these locations.

8. Where a schedule for placing concrete is shown on the plans no deviation will be permitted there from unless approved in writing by the Engineer.

9. Mixed concrete, after being deposited, shall be consolidated until all voids are filled and free mortar appears on the surface. The concrete shall be placed as nearly as possible in its final position and the use of vibrators for extensive shifting of the mass of fresh concrete, will not be permitted.

10. Except for concrete used in cast-in-place piles, fresh concrete shall not be permitted to fall from a height greater than 4 feet without the use of adjustable length pipes, tubes or double belting placed to prevent segregation of the concrete. Double belting shall not be used unless the thickness of the member is less than 16 inches.

11. In vertical sections, concrete shall be deposited continuously in horizontal layers of 24 inches maximum depth so as to maintain a horizontal plastic surface until the completion of the unit. No concrete shall be deposited on concrete which has hardened sufficiently to cause the formation of seams and planes of weakness within the section.

12. Concrete for horizontal members or sections shall not be placed until the concrete in the supporting vertical members or sections is no longer plastic and has been in place at least two hours.

13. In all slabs, concrete shall be deposited in a continuous or monolithic operation to the full thickness of the slab. Each batch shall be dumped against previously placed concrete and not away from it, and shall not be dumped in separate piles and then worked together.

14. The concrete in each integral part of the structure shall be placed continuously, and work will not be allowed to commence on any such part unless sufficiently inspected and approved material for the concrete is on hand, and forces and equipment are sufficient to complete the part without interruption in the placing of the concrete.

C. Concrete Vibrating

1. Consolidate concrete by means of high frequency internal vibrators within 15 minutes after it is deposited in the forms. The vibrators shall not be attached to or held against the forms or the reinforcing steel. The vibrating shall be done with care and in such manner that displacement of reinforcement, ducts, and embedded items is avoided.

2. All concrete shall be consolidated by vibration so that the concrete is thoroughly worked around the reinforcement, around embedded items, and into corners of forms, eliminating all air or stone pockets which may cause honeycombing, pitting, or planes of weakness.

3. Internal vibrators used shall be the largest size and the most powerful that can be properly used in the work, as described in Table 5.1.4 of ACI 309. They shall be operated by competent workmen. Use of vibrators to transport concrete within forms shall not be allowed. The vibrator shall be inserted vertically at uniform spacing over the entire area of the placement. The distance between insertions shall

generally be about 1½ times the radius of action, or such that the area visibly affected by the vibrator overlaps the adjacent just-vibrated area by a few inches. In slabs, the vibrator shall be sloped toward the horizontal as necessary to operate in a fully embedded position.

4. The vibrator shall penetrate rapidly to the bottom of the layer, and at least 6 inches into the preceding layer if there is such. At each insertion, the vibrator shall be held stationary for a time sufficient to consolidate the concrete but not cause segregation, generally from 5 to 15 seconds. The vibrator shall then be withdrawn slowly, at the rate of approximately 3 inches per second.

5. A spare vibrator in good working condition shall be kept on the job site during all concrete placing operations. Where the concrete is to have an as-cast finish, a full surface of mortar shall be brought against the form by the vibration process, supplemented if necessary by spading to work the coarse aggregate back from the formed surface.

6. The use of external vibrators for consolidating concrete will be permitted when, in the opinion of the Engineer, the concrete is inaccessible for adequate consolidation provided the forms are constructed sufficiently rigid to resist displacement or damage from external vibration.

D. Cold Weather Requirements

1. Provide adequate equipment for heating concrete materials and protecting concrete during freezing or near-freezing weather in accordance with ACI 306 and the following paragraphs.

2. When the temperature of the surrounding atmosphere is 40 degrees F or is likely to fall below this temperature, use heated mixing water not to exceed 140 degrees F. Do not allow the heated water to come in contact with the cement before the cement is added to the batch.

3. When placed in the forms during cold weather (as defined in ACI 306), maintain concrete temperature at not less than 55 degrees F for the first five days after placing, and above 35 degrees F for the remainder of the curing period. Provide thermometers to indicate the ambient temperature and the temperature 2 inches inside the concrete surface.

4. There will be no additional reimbursement made to the Contractor for costs incurred for placing concrete during cold weather.

E. Hot Weather Requirements

1. During hot weather, give proper attention to ingredients, production methods, handling, placing, protection, and curing to prevent excessive concrete temperatures or water evaporation in accordance with ACI 305 and the following paragraphs.

2. When the weather is such that the temperature of the concrete as placed would exceed 90 degrees F, use ice or other means of cooling the concrete during mixing

and transportation so that the temperature of the concrete as placed will not exceed 90 degrees F.

3. Take precautions when placing concrete during hot, dry weather to eliminate early setting of concrete. This includes protection of reinforcing from direct sunlight to prevent heating of reinforcing, placing concrete during cooler hours of the day, and the proper and timely application of specified curing methods.

4. There will be no additional reimbursement to the Contractor for costs incurred for placing concrete in hot weather.

3.6 BONDING TO EXISTING CONCRETE

See Section 03072.

3.7 FORMWORK

A. Arrange formwork construction to allow for proper sequencing and removal without damage. Use orderly and symmetrical panel arrangement with minimum number of joints. Before proceeding, secure approval of formwork and procedures.

B. Lumber, prefabricated wood panels, metal, or plastic-lined panels shall be sound and free from any defects that will mar or detract from the surface of the finished concrete. Construct forms sufficiently tight to prevent loss of mortar. Design forms to withstand vibrator action. Treat forms with a nonstaining material to eliminate absorption of water and to act as a form release agent.

C. Thoroughly remove all dirt, mortar, and foreign matter before each use. Where the bottom of the form is inaccessible from within, provide access panels to permit thorough removal of extraneous material before placing concrete.

D. Kerf wood forms inserted for architectural treatment to accommodate swelling without pressure on the concrete.

E. Chamfer all exposed horizontal and vertical edges or other corners ¾-inch, both interior and exterior of structures.

F. Earth trench forms for walls and footings below existing and final grades may be used, if approved after inspection of the trenches, provided the sides are clean, even, vertical, true, and provided the bottoms are level, clean, and without fill, and the width is increased two (2) inches.

G. Where tolerances are not shown elsewhere, permissible deviations from established lines, grades, and dimensions are listed below:

1. Variation from the Plumb

    a. In the lines and surfaces of columns, piers, walls and in any other vertical members: in 10 feet, ¼-inch; in any story or 20 feet maximum, 3/8-inch; in 40 feet or more, ¾-inch.

    b. For exposed corners and other conspicuous lines: in any bay or 20 feet maximum, ¼-inch; in 40 feet or more, ½-inch.

2. Variation from the Level or from the Grades Shown

    a. In floors, ceilings, and beam soffits: in 10 feet, ¼-inch; in any bay or 20 feet maximum, 3/8-inch; in 40 feet or more, ¾-inch; in floors to receive tile, maximum of 1/8" in 10 feet.

    b. For exposed lintels, sills, parapets, horizontal grooves and other conspicuous lines: in any bay or 20 feet maximum, ¼-inch; in 40 feet or more, ½-inch.

3. Variation of the linear building lines from established position in plan and related position of columns, walls and partitions: In any bay or 20 feet maximum, ½-inch; in 40 feet or more, 1 inch.

4. Variation in tank, channel or structural lines in 10 feet, ¼-inch; in 20 feet, 3/8 inch; in 40 feet or more, ½-inch.

5. Variation in the sizes and locations of sleeves, floor openings and wall openings: ¼-inch.

6. Variation in cross-sectional dimensions of columns, beams and piers, and in the thickness of slabs and walls: minus, ¼-inch; plus, 3/8-inch.

7. Footings

    a. Variation in Dimensions in Plan: Minus, ½-inch; plus, 2-inch.

    b. Misplacement or Eccentricity: 2 percent of the footing width in the direction of misplacement but not more than 2 inches.

    c. Misplacement or Eccentricity of Footings Supporting Masonry Or Concrete: ½-inch.

    d. Reduction in Thickness: Minus 5 percent of specified thickness.

8. Variation in Steps

    a. In a Flight of Stairs: rise, 1/8-inch; tread, ¼-inch.

    b. In Consecutive Steps: rise, 1/16-inch; tread, 1/8-inch.

9. Variation from established lines and grades in sidewalks, plazas, outdoor concrete slabs, curb and gutter sections: in 10 feet, ¼-inch; in 1 foot, 1/8-inch.

H. Where tolerances are not met, the Owner's Representative may require removal and replacement at no cost to the Owner.

3.8 REINFORCEMENT

A. Design: The reinforcement design shown on drawings shows only the necessary information for detailing the reinforcement and preparing placing and bending details. Prior to starting concrete work, submitted detailed shop drawings shall be approved by the Engineer.

B. Bending: In accordance with CRSI Manual of Standard Practice, Chapter 7.

C. Placement: Place reinforcement accurately as shown. Adequately secure metal reinforcement in position by concrete or metal chairs and spacers, in accordance with CRSI Manual of Standard Practice, Chapter 8. Distance between the steel and the surface, as shown; otherwise, in accordance with Chapter 8.

D. Splices: Locate splices of reinforcement as shown. For any splices not shown, assume Class B splice. Stagger splice in adjacent horizontal bars, with 5-feet stagger distance. Lap adjacent sheets of wire mesh a minimum of 6 inches and wire securely.

E. Inspection: After reinforcement has been placed, it shall be inspected and approved before placing concrete.

F. Conditions of Surfaces: At time concrete is placed, notify Engineer 48 hours prior to placement of concrete. Concrete shall not be places until Engineer has reviewed and approved the placement of all reinforcing steel.

G. Welding Reinforcement: Do not weld reinforcing steel unless specifically approved by the Engineer. Welding to be in accordance with ASTM A706.

3.9 JOINTS AND EMBEDDED ITEMS

A. Construction Joint

1. Obtain approval for joints not shown and locate them where they least impair the strength of the structure. Unless otherwise shown on the drawings, joints in walls and columns shall be at the underside of floors, slabs or beams, and at the top of footings or floor slabs. Place beams at the same time as slabs. At least two hours shall elapse after depositing concrete in columns or walls before depositing concrete in supported beams or slabs. As the new concrete is placed, vibration in tops of columns and walls is desirable. Make joints perpendicular to the main reinforcement.

2. All horizontal construction joints in walls shall have a continuous wood screed strip at the outer face of joint to form a true line. Screeds shall be removed and the reglet thoroughly cleaned out before pouring the next portion of wall.

3. Continue all reinforcing steel and mesh across construction joints. Lap slices shall be located outside all construction joints.

4. Construction joints shall be made rough and all laitance removed from the surface by chipping the entire surface, sandblasting with coarse silica sand, or hosing the surface 4 to 6 hours after the pour with a fine spray, exposing solidly embedded clean aggregate.

5. Forms and reinforcing shall likewise be cleaned of drippings, debris, etc., by means of compressed air. Surfaces of the hardened concrete shall be cleaned to the satisfaction of the Engineer and wet as required before placing of new concrete. Just before starting the new pour, all free water shall be removed and the horizontal surfaces shall be covered with at least a 4-inch thickness of concrete composed of cement and fine aggregate, omitting the coarse aggregate.

B. Expansion Joints

1. Install expansion joint fillers to ½-inch below slab.

2. Where shown, load transfer dowels shall consist of plain bars with one half coated with an approved antibond coating. The coated half shall be sleeved. No other reinforcement or metal shall extend continuously through the joint.

C. Waterstops

1. The design and location of waterstops shall be as shown on the drawings and in these specifications. Each piece of premolded waterstop shall be of maximum practicable length to minimize the number of end joints.

2. PVC waterstops shall be properly heat spliced at the ends and intersections to ensure continuity. Construct forms for construction joints in such a manner as to prevent injury to waterstops. Allow at least 10 minutes before pulling or straining the new splice in any way. The finished splices shall provide a cross section that is dense and free of porosity with tensile strength of not less than 80% of the unspliced materials.

3. Install waterstops in strict conformance with manufacturers recommendations.

4. Hold PVC waterstops securely in position with continuous No. 3 rebar secured to waterstops and hog rings at 12" max on center. Secure continuous rebar to each mat of reinforcing with tie wire at 12" on center. Install waterstops in construction and expansion joints in hydraulic structures or where shown in the drawings.

5. If joint is not watertight after construction, one or both of the following shall be done to provide a watertight joint:

   a. Grouting of the joint by drilling grout holes to the center of the structure unit and forcing epoxy grout into the joint under pressure.

   b. Cutting of a bevel groove on the water side of the joint. The groove shall be ½ to ¾-inch in width and depth and shall be caulked with epoxy joint sealer in accordance with manufacturer's instructions.

D. Other Embedded Items

1. Prior to concreting, place all required sleeves, inserts, anchor bolts and embedded items.

2. Give all trades whose work is related to the concrete ample notice and opportunity to introduce embedded items before concrete is placed.

3. Position expansion joint material, waterstops, and embedded items accurately and support them against displacement. Fill voids in sleeves, inserts, and anchor slots temporarily with readily removable material to prevent the entry of concrete.

E. Pipes and Wall Spools Cast in Concrete

1. Install wall spools (i.e. bell ring inserts), wall flanges, and wall anchors before placing concrete. Do not weld, tie, or otherwise connect the wall spools or anchors to the reinforcing steel.

2. Support pipe and fabricated fittings to be encased in concrete on concrete piers or pedestals. Carry concrete supports to firm foundations so that no settlement will occur during construction.

3. Pipes or spools located below operating water level shall have waterstop ring collars and shall be cast in place. Do not block out such piping and grout after the concrete section is cast. Pipes fitted with thrust rings shall be cast in place.

F. Additional Reinforcement Around Openings: Place additional reinforcement around pipe or openings as indicated in the drawings

3.10 FORM REMOVAL

Carefully remove forms to ensure the complete safety of the structure. All supporting forms or shoring shall remain in place for a minimum of 10 days or until members have acquired the 28-days compressive strength to support their weight and imposed loads safely.

3.11 CONSTRUCTION LOADS ON STRUCTURAL SLABS

No construction materials and equipment shall be allowed on structural slabs until the concrete has reached the 28-day compressive strength.

3.12 REPAIRING AND PATCHING

A. Clean, thoroughly dampen and patch all tie holes and all repairable defects immediately after form removal.

B. All honeycombed and other defective concrete shall be removed to sound concrete with edges perpendicular to the surface. Surface imperfections greater than 3/8 inch in any dimension shall be removed and the affected areas neatly patched. Dampen the area to be patched and an area at least 6 inches wide surrounding it to prevent absorption of water from the patching mortar. Mix patching grout to the consistency of thick cream and brush it well into the surface.

C. Make the patching mortar of the same material and approximately the same proportions as used for the concrete, omitting the coarse aggregate. The resultant mortar shall consist of not more than 1 part cement to 2½ parts sand by damp loose volume.

D. Do not use more mixing water than necessary for handling and placing. Mix the patching mortar in advance and allow to stand with frequent manipulation with a trowel, without adding water, until it has reached the stiffest consistency that will permit placing.

E. After surface water has evaporated from the area to be patched, brush the patching grout well into the surface. When the patching grout begins to lose the water sheen, apply the premixed patching mortar. The mortar shall be thoroughly consolidated into place and struck off to leave the patch slightly higher than the surrounding surface. To permit initial shrinkage, leave the patch undisturbed for at least 1 hour before finishing it. Keep the patched area damp for 7 days. Do not use metal tools in finishing a patch in a formed wall which will be exposed.

F. Tie Holes: Clean thoroughly by mechanical abrading, dampen, then fill solid with patching mortar. Mortar shall match color of concrete. Fill tie holes prior to finishing.

3.13 FINISHES FOR SURFACES

A. Finish 1: Beams, columns, and exterior walls not exposed to water or view: Repair defective concrete, fill depressions deeper than ½ inch, and fill tie holes.

B. Finish 2: Exterior and interior walls, beams, and columns exposed to water, unless such items are to be coated: Repair defective concrete, remove fins, fill depressions ¼ inch or deeper, and fill tie holes.

C. Finish 3: Walls, beams, and columns of structures or buildings exposed to view and to 1 foot below water level or finished grade; underside of formed floors or slabs (EXCEPT - surfaces which are to be coated): In addition to Finish 2, fill depressions and airholes with mortar. Dampen surfaces and then spread a slurry consisting of one part cement and one and one-half parts sand by damp loose volume, over the surface with clean burlap pads or sponge rubber floats. Remove any surplus by scraping and then rubbing with clean burlap.

D. Finish 4: Exterior and interior surfaces to be coated: Repair defective concrete, remove fins, fill depressions 1/16 inch or deeper, fill tie holes, remove mortar spatter, and remove bulges higher than 1/16 inch. Surface shall be troweled, sacked, and brush blasted.

E. Finish 5: Slabs and floors to be covered with concrete or grout: Screed to grade without special finish.

F. Finish 6: Slabs and floors not water bearing: Repair defective concrete, remove fins, fill depressions ¼ inch or deeper, and fill tie holes.

G. Finish 7: Slabs and floors which are water bearing; Slab surfaces on which mechanical equipment moves; Slab surfaces to receive hardener: Steel trowel finish, free from trowel marks and all irregularities.

H. Finish 8: Slabs and floors of structures or buildings exposed to view: Steel trowel finish without local depressions or high points and apply a light hair-broom finish. Do not use stiff bristle brooms or brushes. Leave hair-broom lines parallel to the direction of slab drainage.

I. Finish 9: Slabs and floors at slopes greater than 10% and stairs: Steel trowel finish without local depressions or high points. Apply a coarse broom finish. Leave broom lines parallel to the direction of slope drainage.

J. Finish 10: Exposed stairs and landings and slabs designated for non-slip finish: Areas to have non-slip finish shall incorporate 25 pounds per 100 square feet of aluminum oxide grains into the surface. Immediately before floating begins, sprinkle two-thirds of the abrasive evenly over the surface and float. After embedment, sprinkle the remaining one-third at right angles to the previous application. Apply more heavily in areas not sufficiently covered by the first application, and float again immediately. Complete finishing as specified under Troweled Finish.

K. Finish 11: Exposed edges (EXCEPT – edges normally covered with earth): Provide chamfer or beveled edges per this Section.

L. Finish 12: Top of walls, beams, and similar unformed surfaces: Strike smooth and float in accordance with Finish 4.

3.14 SLAB FINISHING

A. Screeding: After concrete has been thoroughly consolidated, screed slabs to the desired elevation and contours by means of accurately placed edge forms and intermediate screed strips.

B. Floated Finish

1. Place, consolidate, strike off, and level concrete, but do not work it further until ready for floating. Begin floating when water sheen has disappeared and when the surface has stiffened sufficiently.

2. During or after the first floating, check planeness of surface with a 10-foot straightedge applied at not less than two different angles, and then cut down all high spots and fill all low spots to achieve a true plane within ¼-inch in 10 feet.

3. Refloat slab immediately to a uniform sandy texture.

C. Troweled Finish: Float finish slab as described above, then steel trowel by machine or by hand. Additional troweling shall be done by hand after the surface has hardened sufficiently. Final troweling shall produce a ringing sound from the trowel and the finished surface shall be free of trowel marks, uniform in texture, and appearance shall be planed to the tolerance specified under Floated Finish. Troweled finish shall occur at tank floors (except where grout topping or fillets will follow), troughs, channels, clear wells, and all building floor slabs.

D. Coarse Broom Finish: Immediately after floating, give slabs for exterior walkways and exterior stoops a coarse transverse scored texture by drawing a broom across the surface.

3.15 FLOOR HARDENER

A. All building floors not scheduled for floor covering, Non-slip Floor Finish, or Broom finish shall receive hardener (Finish 7).

B. Apply hardener after floors have cured, in accordance with the manufacturer's recommendations.

C. Floors shall receive three applications of hardener, mixed and applied as specified for heavy duty floors as shown on contract drawings.

3.16 CURING AND PROTECTION

A. General: Beginning immediately after placement, protect concrete from drying, excessively hot and cold temperatures and mechanical injury. Keep moisture loss to a minimum until cement has hydrated and concrete is hard. Keep concrete constantly moist during the curing period. Follow color admixture manufacturer's recommendations for integrally colored concrete.

B. Curing

1. Formed Surfaces: Keep forms wet. Cool metal forms exposed to the sun with water. If curing compound is used, apply in accordance with manufacturer's instructions. Curing compound shall not be used on any wall/slab scheduled to be coated.

2. Slabs: Immediately after finishing, apply one of the materials specified in Section 2.22 entitled Curing Materials, but use membrane forming liquid only with Engineer's approval.

3. Duration of Curing: 7 days minimum.

C. Protection

1. In cold weather, maintain the moisture conditions but also, by heating or covering, maintain the temperature of the concrete between 50 degrees F and 70 degrees F for entire curing period.

2. In hot weather take immediate steps to protect newly finished concrete from drying effects of wind and sun, and maintain temperature of the air surrounding the concrete uniform within 5 degrees F in any one hour or 50 degrees F in any 24 hour period.

3. During curing period, protect concrete from mechanical damage, loading, shock and vibration.

3.17 CONSTRUCTION OF CONCRETE FILLETS, TOPPING, AND EQUIPMENT PADS

A. Concrete fillets, topping and equipment pads shall be placed as soon as possible after completion of the curing period of the tank walls and structural floors. Contact surfaces shall be thoroughly cleaned to the degree recommended by the bonding agent manufacturer.

B. Bonding agent shall be accurately and thoroughly mixed and applied at the manufacturer's recommended coverage rate. Mix only the amount which can be used prior to expiration of the pot life. Concrete shall be immediately placed over the fresh surface before setting of the agent. Bonding agent which sets up prior to placing concrete shall be recoated with a fresh coat.

C. Concrete fillets, topping, and equipment pads shall be accurately screeded to the slopes and elevations shown and steel trowel finished. Cure concrete as specified for slabs above. Set equipment anchor bolts in pad to accommodate equipment furnished.

3.18 BACKFILL AGAINST STRUCTURES

A. Backfill against concrete structures shall be allowed only when the concrete has reached the specified 28-day compressive strength or as approved by the Engineer. Where backfill is to be place on both sides of the wall, or against more than one wall of a structure, place the backfill uniformly on both sides of the wall or walls.

B. Do not backfill until structure has passed leakage testing.

C. Do not backfill the walls of structures that are laterally restrained or supported by suspended slabs or slabs on grade until the slab is poured and the concrete has reached the specified compressive strength.

3.19 NONSHRINK GROUT

Use nonshrink grout to fill sleeves and voids under equipment bases. Grout shall be mixed and used in accordance with manufacturer's recommendations. Exposed edges shall be smooth, straight and even.

3.20 EPOXY GROUT

See Section 03071 for requirements.

3.21 CONCRETE GROUT

Concrete grout shall be used as a filler material to form shapes and profiles over concrete surfaces as shown on the drawings.

3.22 ADHESIVE ANCHORS

Install in strict conformance to manufacturer's printed instructions. Do not cut or damage existing reinforcing bars. Where reinforcing bars are encountered, move anchor location or core hole as approved by the Engineer.

3.23 LEAKAGE TESTING OF HYDRAULIC STRUCTURES

A. General

1. Prior to backfilling the structure and the application of water-proofing coatings, hydrostatically test reinforced concrete structures which will contain water or fluid to determine that they conform to Section B herein and are free of detectable leaks. Do not start leak testing until all of the following conditions are met:

    a. Structure or structural materials have achieved their maximum specified design strength.

    b. Cure time, defined above within subsection 3.16, has elapsed

    c. Do not hydrostatically test walls which are to be restrained or laterally supported by slabs or walkways until slab/walkway concrete has obtained the specified compressive strength and is at least 14-days old.

    d. If a water test is desired for sequencing purposes on an incomplete structure, the Contractor shall immediately notify the Engineer. Such a request may not be allowed and is at the discretion of the Engineer. If the request is approved by the Engineer, the test cannot take place until the following conditions are met:

1) a duration of 14 days minimum has elapsed or the cure time has been reached, whichever is greater

2) the structure or structural materials have achieved their maximum specified design strength

3) Engineer's defined site specific requirements, defined during request review.

2. Prior to testing, clean exposed surfaces by thoroughly hosing and removing surface laitance and loose matter from walls and slabs. Remove wash water and debris from the structures by means other than washing through plant piping.

B. Leakage Test Procedure

1. All liquid containing structures (new or modified existing) shall be leak tested. Fill hydraulic structures to be subjected to leakage tests with potable water to the normal operating liquid level line not less than 2 feet below top of walls. Filling shall be at a uniform rate over a 24-hour period with continuous monitoring. For structures with adjacent bays, fill all bays simultaneously. Empty adjacent bays alternately. Repair any running leaks which appear during filling before continuing.

2. After the structure has been kept full for 48 hours, it will be assumed for the purposes of the test that the absorption of moisture by the concrete in the structure is complete. Then close all valves and gates to the structure and measure the change in water surface each day for a five-day period.

3. During the test period, examine exposed portions of the structure, and mark visible leaks or damp spots. A damp spot is defined as an area which seeps sufficient moisture to dampen a paper towel when pressed against it. Repair visible leaks or damp spots after dewatering. Additionally, if the drop in water surface in the 24-hour period exceeds 1/10 of 1% of the normal volume of liquid contained in the structure, the leakage shall be considered excessive.

4. The determination of surface moisture evaporation shall be aided with a 24-inch deep, white colored, watertight container with not less than 10 square feet of surface area exposure. Position container to experience environmental conditions similar to the structure being tested. Subtract the water loss due to evaporation from the measured water loss in the structure to determine the water loss due to leakage.

5. If the leakage is excessive, drain the structure, repair leaks and damp spots, and refill the structure and again test for leakage. Continue this process until the drop in water surface in a 24-hour period meets the test requirements and visible leaks and damp spots are eliminated.

6. If an underdrain system is present, inspect the manholes of the underdrain system for evidence of leaks in the floor slabs. If leaking is indicated, locate and repair.

7. If the leakage is detected and location is unknown, use the following procedures. All water-bearing structures must be seeded. Seed the floor slab of each hydraulic structure with one sack of cement per 1,000 square foot surface area. Seeding shall take place after the test filling has reached 18 inches in depth. Detect leaks in

construction and expansion joints with the aid of a diver. Stir cementitious deposits flowing toward leaks and repair where the defect is located.

8. Repair flowing leaks whether leakage exceeds the allowable leakage or not.

9. Repairs and additional filling and testing shall be made by the Contractor at no additional cost to the Owner.

10. Use Form A, attached to this specification.

C. Repair of Defects

1. Do not repair defects until concrete has been reviewed by the Owner's Representative.

2. Surface Defects: Repair surface defects that are smaller than 1 foot across in any direction and are less than ½ inch in depth. Repair by removing the honeycombed and other defective concrete down to sound concrete, make the edges perpendicular to the surface and at least 3/8 inch deep, thoroughly dampen the surface, work into the surface a bonding grout, fill the hole with mortar, match the finish on the adjacent concrete, and cure as specified.

3. Severe Defects: Repair severe defects that are larger than surface defects but do not appear to affect the structural integrity of the structure. Repair by removing the honeycombed and other defective concrete down to sound concrete, make the edges perpendicular to the surface, sandblast the surface, coat the sandblasted surface with an approved epoxy bonding compound, place nonshrink grout as specified herein, match the finish on the adjacent concrete, and cure as specified.

4. Major Defects: If the defects are serious or affect the structural integrity of the structure or if patching does not satisfactorily restore the quality and appearance to the surface, the Engineer may require the concrete to be removed and replaced, complete, in accordance with the provisions of this section at no additional cost to the Owner.

D. Repair of Cracks in Concrete

1. Repair leaking concrete cracks that are 1/10 inch or less in width by epoxy pressure injection.

a. Preparation: Insert and anchor a one-way polyethylene valve or pipe nipple in holes drilled into crack. Position them every 6- to 18-inches on center depending on the width of crack. Maintain a slow, steady pressure rather than a rapid buildup of pressure. When grouting material reaches the next tube, stop off the present position and follow the same procedure on the next position.

b. Upon completion of the epoxy grouting, remove the epoxy gel used to hold the valve or nipple by applying a direct flame to the epoxy and scraping it off. Fill the holes with the same material as used for patching the surface.

c. While the valves or nipples are installed first, the grouting operation shall not commence until after the patch work has been completed and has sufficiently cured.

2. Repair cracks in concrete structures that are wider than 1/10 inch in width by cutting out square edged and uniformly aligned joining 3/8 inch wide by 3/4 inch deep, preparing exposed surfaces of the joining, priming the join, and applying polyurethane join sealant in accordance with this section.

3. If the cracks are serious or affect the structural integrity or function of the element, the Engineer may require the concrete to be removed and replaced, complete, in accordance with the provisions of this section at no additional cost to the Owner.

4. After repairing visible leaks, damp spots or leaking concrete cracks, retest the structure.

3.24 CONCRETE TESTING

Concrete testing shall be performed by the Owner, at Owner's expense, in accordance with the following:

A. Test reports shall be sent to the Engineer with copies to the Contractor.

B. Concrete which fails to meet strength, slump, air or shrinkage requirements may be rejected by the Engineer before, during, or after placement.

C. One set of four concrete test cylinders shall be taken for every 50 cubic yards or fraction thereof of each concrete mix design placed each day. The Engineer has the option to direct the required test specimens to be taken as he deems necessary to insure the concrete meets the specification.

D. Specimens shall be taken, cured, and tested for compressive strength in accordance with ASTM C31, ASTM C39, and ASTM C172, respectively.

E. Test one cylinder at 7 days for information; test two cylinders at 28 days for acceptance; and hold one cylinder for verification. Strength acceptance will be based on the average of the strengths of the two cylinders tested at 28 days. If one cylinder of a 28-day test manifests evidence of improper sampling, molding, or testing, other than low strength, discard it and use the fourth cylinder for the test result.

F. Determine the concrete slump by ASTM C143 with each strength test sampling and as required to establish consistency.

G. Determine air content of the concrete using ASTM C231 to verify the percentage of air in the concrete immediately prior to depositing in the forms.

H. Determine drying shrinkage in accordance with ASTM C157, as modified by SEAOC, at 7, 14, 21, and 28 days of drying after the wet cure period. A minimum of three sets of three shrinkage bars shall be fast over the project duration. The Engineer has the option to increase or decrease the testing frequency as he deems necessary to insure the concrete meets the specification. Shrinkage bars of 28 days drying age shall not exceed 0.045 percent for laboratory cast and 0.058 percent for field cast.

I. The average value of concrete strength tests shall be equal to or greater than the specified 28-day strength. No test shall be less than 90% of the specified 28-day strength.

J. If the 28-day strength tests fail to meet the specified minimum compressive strength, the concrete will be assumed to be defective and one set of three cores from each area may be taken as selected by the Owner and in accordance with ASTM C42. If the average compressive strength of the set of three concrete cores fails to equal 90% of the specified minimum compressive strength or if any single core is less than 75% of the minimum specified compressive strength, the concrete will be considered defective. The Owner may require additional coring, nondestructive load testing, or repair of defective concrete. Costs of coring, testing of cores, load testing, and required repairing pertaining thereto shall be paid by the Contractor at no extra cost to the Owner.

3.25 DAMAGED OR DEFECTIVE CONCRETE

Remove damaged or defective concrete before completion and acceptance of the work and replace with acceptable concrete, at no additional cost to the Owner.

3.26 SAMPLE HYDRAULIC STRUCTURE LEAKAGE LEAK TEST FORM A

Contractor _____Project_____

Structure: _____Test #_____

Work to be Performed	Date	Quantity Water (gal)	Visible Leaks (Y/N)	Water Level Height	Pan Evaporation Reading	% loss	Contractor Initial	Construct. Manager Initial

Notes:_____
_____
_____
_____
_____

END OF SECTION

SECTION 03110

CONTROLLED LOW STRENGTH MATERIAL

PART 1 GENERAL

1.1 SUMMARY

A. Section Includes: Controlled Low Strength Material (CLSM).

B. Related Sections:

1. Section 03100 - Concrete.

1.2 REFERENCES

American Society of Testing and Materials (ASTM):

A. C31 - Standard Practice for Making and Curing Concrete Test Specimens in the Field.

B. C33 - Standard Specification for Concrete Aggregates.

C. C39 - Standard Test Method for Compressive Strength of Cylindrical Concrete Specimens.

D. C143 - Standard Test Method for Slump of Hydraulic Cement Concrete.

E. C231 - Standard Test Method for Air Content of Freshly Mixed Concrete by the Pressure Method.

F. C260 - Standard Specification for Air-Entraining Admixtures for Concrete.

G. C618 - Standard Specification for Coal Fly Ash and Raw or Calcined Natural Pozzolan for Use in Concrete.

H. D1557 - Standard Test Methods for Laboratory Compaction Characteristics of Soil Using Modified Effort (56,000 ft-lbf/ft^3(2,700 kN-m/m3))

1.3 SYSTEM DESCRIPTION

Performance Requirements:

A. Total Calculated Air Content: Not be less than 8.0 percent nor greater than 12.0 percent.

B. Minimum Unconfined Compressive Strength: Not less than 50 pounds per square inch measured at 28 days.

C. Maximum Unconfined Compressive Strength: Not greater than 150 pounds per square inch measured at 28 days.

D. Wet Density: No greater than 132 pounds per cubic foot.

1.4 SUBMITTALS

A. Product Data: Submit data completely describing products.

B. Sieve Analysis: Submit sieve analyses of fine and coarse aggregates being used in triplicate. Resubmit at any time there is a significant change in grading of materials.

C. Mix: Submit full details, including mix design calculations for mix proposed for use.

D. Trial Batch Test Data:

1. Submit data for each test cylinder.

2. Submit data that identifies mix and slump for each test cylinder.

E. Cement Mill Tests: Include alkali content, representative of each shipment of cement for verification of compliance with specified requirements.

F. Pozzolan Certificate of Compliance: Identify source of pozzolan and certify compliance with requirements of ASTM C 618.

PART 2 MATERIALS

2.1 MATERIALS

A. Portland Cement: Type II modified portland cement as specified in Section 03100.

B. Fly Ash: As specified in Section 03100.

C. Water: As specified in Section 03100.

D. Admixture: Air entraining admixture in accordance with ASTM C260.

E. Fine Aggregate: Concrete sand that does not need to be in accordance with ASTM C33. No more than 12 percent of fine aggregate shall pass a No. 200 sieve, and no plastic fines shall be present.

F. Coarse Aggregate: Pea gravel no larger than 3/8 inch.

2.2 MIXES

Suggested Design Mix

Material	Weight	Specific Gravity	Absolute Volume Cubic Foot
Cement	30 pounds	3.15	0.15
Fly Ash	300 pounds	2.30	2.09
Water	283 pounds	1.00	4.54
Coarse Aggregate	1,465 pounds	2.68	8.76
Fine Aggregate	1,465 pounds	2.68	8.76
Admixture	4-6 ounces		2.70
TOTAL	3,543 pounds		27.00

2.3 SOURCE QUALITY CONTROL

A. Trial Batch:

1. After mix design has been accepted by Engineer, have trial batch of the accepted mix design prepared by testing laboratory acceptable to Engineer.
2. Prepare trial batches using specified cementitious materials and aggregates proposed to be used for the Work.
3. Prepare trial batch with sufficient quantity to determine slump, workability, consistency, and to provide sufficient test cylinders.

B. Test Cylinders:

1. Prepare test cylinders in accordance with ASTM C31 with the following exceptions:
   a. Fill the concrete test cylinders to overflowing and tap sides lightly to settle the mix.

b. Do not rod the concrete mix.

c. Strike off the excess material.

2. Place test cylinders in a moist curing room. Exercise caution in moving and transporting the cylinders since they are fragile and will withstand only minimal bumping, banging, or jolting without damage.

3. Do not remove the test cylinder from mold until the cylinder is to be capped and tested.

4. The test cylinders may be capped with standard sulfur compound or neoprene pads:

a. Perform the capping carefully to prevent premature fractures.

b. Use neoprene pads a minimum of 1/2 inch thick, and 1/2 inch larger in diameter than the test cylinders.

c. Do not perform initial compression test until the cylinders reach a minimum age of 3 days.

C. Compression Test 8 Test Cylinders: Test 4 test cylinders at 3 days and 4 at 28 days in accordance with ASTM C39 except as modified herein:

1. The compression strength of the 4 test cylinders tested at 28 days shall be equal to or greater than the minimum required compression strength, but shall not exceed maximum compression strength.

D. If the trial batch tests do not meet the Specifications for strength or density, revise and resubmit the mix design, and prepare additional trial batch and tests. Repeat until an acceptable trial batch is produced that meets the Specifications.

1. All the trial batches and acceptability of materials shall be paid by the Contractor.

2. After acceptance, do not change the mix design without submitting a new mix design, trail batches, and test information.

E. Determine Slump in Accordance with ASTM C143 with the Following Exceptions:

1. Do not rod the concrete material.

2. Place material in slump cone in one semi-continuous filling operation, slightly overfill, tap lightly, strike off, and then measure and record slump.

PART 3 EXECUTION

3.1 INSTALLATION

A. Prior to placement, soils located below controlled low strength material placement shall be scarified to a depth of 8 inches, uniform moisture conditioned to or above the optimum

moisture content, and compacted to a minimum of 95 percent relative compaction in accordance with ASTM D1557.

B. Place controlled low strength material by any method which preserves the quality of the material in terms of compressive strength and density:

1. Limit lift heights of CLSM placed against structures and other facilities that could be damaged due to the pressure from the CLSM, to the lesser of 3 feet or the lift height indicated on the Drawings. Do not place another lift of CLSM until the last lift of CLSM has set and gained sufficient strength to prevent lateral load due to the weight of the next lift of CLSM.

2. The basic requirement for placement equipment and placement methods is the maintenance of its fluid properties.

3. Transport and place material so that it flows easily around, beneath, or through walls, pipes, conduits, or other structures.

4. Use a slump of the placed material greater than 9 inches, and sufficient to allow the material to flow freely during placement:

a. After trial batch testing and acceptance, maintain slump developed during testing during construction at all times within plus or minus 1 inch.

5. Use a slump, consistency, workability, flow characteristics, and pumpability (where required) such that when placed, the material is self-compacting, self densifying, and has sufficient plasticity that compaction or mechanical vibration is not required.

3.2 FIELD QUALITY CONTROL

A. General:

1. Make provisions for and furnish all material for the test specimens, and provide manual assistance to assist the Engineer in preparing said specimens.

2. Be responsible for the care of and providing curing condition for the test specimens.

B. Tests by Owner:

1. During the progress of construction, the Owner will have tests made to determine whether the controlled low strength material, as being produced, complies with the requirements specified hereinbefore. Test cylinders will be made and delivered to the laboratory by the Engineer and the testing expense will be borne by the Owner.

2. Test Cylinders:

a. Prepare test cylinders in accordance with ASTM C31 with the following exceptions:

1) Fill the concrete test cylinders to overflowing and tap sides lightly to settle the mix.

2) Do not rod the concrete mix.

3) Strike off the excess material.

b. Place the cylinders in a safe location away from the construction activities. Keep the cylinders moist by covering with wet burlap, or equivalent. Do not sprinkle water directly on the cylinders.

c. After 2 days, place the cylinders in a protective container for transport to the laboratory for testing. The concrete test cylinders are fragile and shall be handled carefully. The container may be a box with a Styrofoam or similar lining that will limit the jarring and bumping of the cylinders.

d. Place test cylinders in a moist curing room. Exercise caution in moving and transporting the cylinders since they are fragile and will withstand only minimal bumping, banging, or jolting without damage.

e. Do not remove the test cylinder from mold until the cylinder is to be capped and tested.

f. The test cylinders may be capped with standard sulfur compound or neoprene pads:

1) Perform the capping carefully to prevent premature fractures.

2) Use neoprene pads a minimum of 1/2 inch thick, and 1/2 inch larger in diameter than the test cylinders.

3) Do not perform initial compression test until the cylinders reach a minimum age of 3 days.

3. Not less than 3 cylinder specimens will be tested for each 150 cubic yards of controlled low strength material and not less than 3 specimens for each half day's placement:

a. Test 1 cylinder at 3 days and 2 at 28 days in accordance with ASTM C39 except as modified herein.

b. The compression strength of the cylinders tested at 28 days shall be equal to or greater than the minimum required compression strength, but shall not exceed maximum compression strength.

4. The Owner will test the air content of the controlled low strength material. Test will be made immediately after discharge from the mixer in accordance with ASTM C231.

C. Tests by Contractor:

1. Test the slump of controlled low strength material using a slump cone in accordance with ASTM C143 with the following exceptions:

a. Do not rod the concrete material.

b. Place material in slump cone in one semi-continuous filling operation, slightly overfill, tap lightly, strike off, and then measure and record slump.

2. Test the slump at the beginning of each placement, as often as necessary to keep the slump within the specified range, and when requested to do so by the Engineer

END OF SECTION

SECTION 03480

PRECAST UTILITY VAULTS AND CATCH BASINS

PART 1 GENERAL

1.1 DESCRIPTION

The work of this section consists of furnishing and installing precast concrete utility vaults with covers for flow meters, process equipment and other shown services, and also catch basins, all as shown on the contract drawings or specified herein.

1.2 RELATED WORK SPECIFIED ELSEWHERE

A. Section 01300: Submittals

B. Section 01610: Seismic Design Criteria

C. Section 01615: Wind Design Criteria

D. Section 02200: Earthwork

E. Section 02623: Filter Fabric

F. Section 08310: Access Hatches

1.3 SUBMITTALS

A. In accordance with Section 01300, submit manufacturer's literature and drawings showing complete layout, dimensions, design loadings, materials of construction, etc.

B. For all precast items which are manufactured, the Contractor shall also submit a list of the design criteria used by the manufacturer.

C. The Contractor shall submit approved ICBO reports for all lifting inserts, showing allowable design loads on the inserts.

D. Verification of compressive strength shall be submitted in accordance with Section 01300. Such verification may be laboratory trial batch test results with a minimum of three test cylinders or a series of production compression tests with a minimum of 20 sets of test data which fall within the evaluation and acceptance criteria specified herein. Such tests must have been made within the previous two years on the identical concrete mix submitted.

E. For vaults larger than 4'-0" in any dimension, drawings and calculations shall be signed by a Civil or Structural Engineer registered in California. Loads and design criteria shall be as shown on the contract drawings, specification sections 01610 and 01615, and project Geotechnical Reports. Calculations shall be based on the soil pressures provided in the Geotechnical Reports and specification section 01610.

1.4 QUALITY ASSURANCE

Test methods and criteria for evaluation and acceptance of concrete shall be as specified in Section 03100, "Concrete".

PART 2 MATERIALS

2.1 VAULT AND CATCH BASIN DESIGN AND MANUFACTURE

A. Design Loads: Design loads shall consist of live load, dead load, impact load, hydrostatic load, and other loads that may occur.

1. Live loads shall be for HS20-44, or as required per AASHTO Standard Specifications for Highway Bridges with revisions.
2. Design wheel loads shall be sixteen (16) kips.
3. Earth loads shall include a 2-foot soil surcharge.

B. Forms: All forms used in placing concrete shall be sufficiently designed and braced to maintain alignment under pressures of concrete placement.

C. Concrete:

1. Aggregates used in the concrete mix either coarse or fine, excluding light-weight aggregates, shall conform to specifications as outlined by ASTM C33.
2. All light-weight aggregates, fine or coarse, shall conform to specifications as outlined by ASTM C33.
3. Both types of aggregates shall be properly graded and free of any deleterious substances so as to produce a homogeneous concrete mix when blended with cement.

D. Cement: The cement shall be Type II low alkali portland cement and shall meet ASTM C150 Type II standards.

E. Compressive Strength: Sufficient cement content per Section 03100 shall be used per batch so as to produce a minimum strength of 4000 psi at 28 days or other strength by design when required.

F. Batching: A central batching facility shall be used to assure accurate weighing and mixing of materials to obtain a suitable concrete mix.

G. Placing: Concrete shall be made by properly proportioned parts of sand, aggregate and cement with sufficient water to produce a concrete mix of uniform quality and slump. Handling from the mixer or the transport vehicle to the forms for deposit will be in a continuous manner, as rapidly as practicable without segregation or loss of ingredients, until the unit or segment pouring is completed. Compaction by either external or internal mechanical vibration shall be used during the placement of the concrete mix.

H. Curing: Concrete while still in the forms may be steam cured after an initial set has taken place. Steam temperature shall not exceed 160°F, nor raised from normal ambient temperature at a rate exceeding 40°F per hour. Steam curing shall be considered complete after sufficient time has elapsed to produce adequate strength to withstand any structural strain that may be subjected during the form stripping operation. Additional curing may be applied by means of water spraying or membrane curing compound to reach the ultimate strength requirements.

I. Reinforcing Steel: All reinforcing steel, including welded wire mesh, shall be of the size and in the location required for design loads and conforming to ASTM A185. All reinforcing shall be sufficiently tied to withstand any displacement during the pouring operation. All bars shall be intermediate grade, or as specified, billet steel conforming to ASTM A615.

J. Preformed Joint Sealant: The joint sealing compound shall be Quik-Seal, a preformed, cold applied, ready to use plastic joint sealing compound as supplied by Quikset Utility Vaults, Santa Ana, California; Ram-Neck by K.T. Syder Company; or approved equal.

2.2 UTILITY VAULTS

A. Dimensions as shown on the drawings, minimum size shall be 24” x 30”. Open bottom or enclosed with drain or without, as shown or required for service intended.

B. Vault Cover: Designed for HS-20 traffic loading. Unless otherwise noted on the drawings or scheduled in Specification Section 08310, provide galvanized steel, bolt down, drag off, unless shown to be hinged with spring assist, on the drawings or specified.

1. Manufacturers: Brooks Products, Inc., Stockton, CA; Jensen Precast, Sparks, NV; Utility Vault Co.; or equal.

2. Hinged Spring Assist Vault Cover: Where shown on the drawings, vaults shall be provided with spring or torsion assisted two-piece galvanized steel or aluminum covers. Covers shall be designed for HS-20 traffic loading and equipped with heavy forged brass hinges with stainless steel pins including automatic hold open arm with release handle, compression spring operators for ease of operation and to act as a check in retarding downward motion covers. Hardware shall be zinc plated and chromate sealed. Factory finish shall be a “Mill finish with bituminous coating applied to exterior of the frame”. Cover shall be Bilco Model JD-H-20, Halliday Products Series 2HW, or approved equal.

3. Identification: All covers shall have identification marker detailing the contents with 1” bead weld letters (i.e. “water”, “sewer”, “electrical”, chemical”).

C. Internal Ladder: The Utility Vault shall be furnished with an internal aluminum ladder to provide easy access. The ladder rungs shall have a non-slip traction surface and internal stainless steel safety bar. The ladder shall meet or exceed OSHA General Industry Standards, Part 1910.27 for "Fixed Ladders". If the ladder depth is over 15’ (as shown on the drawings), install a safety rail with harness and pull up access pole. For ladders less than 15’ depth, install a head hazard deflector plate. For ladders over 24’, install a safety cage and safety rail with harness and pull up access pole. Ladders shall be compliant with OSHA §1910.27 and 1926.1053.

2.3 CATCH BASINS

A. Unless otherwise noted, catch basins shall be 3’ x 3’ x 6” wall thickness with bottom. Catch basins shall have progressive webbed knock-outs to provide maximum flexibility and permitting pipe of any size shall be neatly and quickly grouted at the job site. All reinforcing steel shall meet ASTM specifications.

B. Catch Basin Grating: Unless otherwise noted on the drawings provide cast iron or galvanized steel grating, HS-20 traffic loading.

C. Manufacturers: Christy Concrete Products, Inc.; Jensen; or equal.

PART 3 EXECUTION

3.1 INSTALLATION

Vaults shall be installed as shown on the Contract Drawings and as recommended by the Manufacturer. Catch basins shall be placed on 6-inch compacted class 2 aggregate base. Vaults deeper than 10 feet below grade shall be placed on 12-inches of crushed rock wrapped in an approved geotextile fabric. Vaults less than 10 feet below grade shall be placed on 12-inches of

compacted class 2 aggregate base. Install level with top at grade in roadways and two to three inches above grade outside of roadways.

3.2 PRECAST VAULT

The above-mentioned precast item shall be installed in accordance with the manufacturer's recommendations, unless otherwise required by the drawings. All joints shall be sealed by the use of preformed sealant and mortar or non-shrink grout so as to be water tight. Interior joints shall be tooled flush.

3.3 CONNECTIONS

Connections to manufactured precast items shall be made by casting sections of pipe into the items using non-shrink grout as shown on the drawings, and/or using an approved resilient connector. All such connections shall be water tight.

END OF SECTION

SECTION 03700

CONCRETE SAW-CUTTING AND CORE-DRILLING

PART 1 GENERAL

1.1 DESCRIPTION

The work of this section consists of saw-cutting and/or core-drilling new openings in existing concrete.

1.2 RELATED WORK SPECIFIED ELSEWHERE

A. Section 01300 - Submittals

B. Section 03100 - Concrete

1.3 QUALITY ASSURANCE

Use adequate numbers of skilled workmen who are thoroughly trained and experienced in the necessary crafts and who are completely familiar with the specified requirements and the methods needed for proper performance of the work of this section.

1.4 SUBMITTALS

A. Comply with pertinent provisions of Section 01300.

B. Submit drawings and commentary showing and describing the proposed cutting procedures and proposed equipment for each type of cut.

PART 2 MATERIALS

Not used.

PART 3 EXECUTION

3.1 SAFETY REGULATIONS

A. Comply with all applicable safety regulations including the requirements of “The Construction Safety Orders” of the State of California and OSHA.

B. Provide equipment in good and safe working order, adequate to perform the work.

C. Provide necessary scaffolding, lighting, access, debris removal equipment and devices, and appropriate safety measures.

3.2 CONCRETE CUTTING

A. Perform concrete cutting as shown on the drawings and as specified herein and in accordance with the approved submittals.

B. Openings shall be cut to the dimensions shown on the drawings and shall not be over-cut. In straight-cut openings, the face opposite the saw shall be chipped to achieve the opening dimension.

3.3 PATCHING

A. Where existing reinforcing bars are cut at new opening, burn back the reinforcing bars a minimum of 1-inch below adjacent concrete.

B. Patch the resulting void at existing reinforcing bars and the surface of chipped opening surfaces with an approved epoxy grout in accordance with Section 03100 - Concrete, to achieve a smooth, uniform surface.

C. Paint the patch exposed surfaces with System K - Epoxy Paint per Section 09900.

3.4 DISPOSAL

A. Remove cut material and dispose off-site in a safe and orderly manner. Do not allow debris to accumulate on the site exposed to view.

B. Inside structures, cuttings, chippings and patching grout droppings must be removed completely. No debris shall be washed into the plant's sediment drain system.

C. Upon completion of the work of this section, the surfaces of all structures shall be clean and free of cuttings, slurry and debris.

END OF SECTION

SECTION 03926

CONCRETE REPAIR

PART 1 GENERAL

1.1 SUMMARY

Section Includes: Repairing damaged structural concrete.

1.2 RELATED SECTIONS

Section 03071 - Epoxies.

1.3 REFERENCES

American Society for Testing and Materials (ASTM):

A. C78 - Standard Test Method for Flexural Strength of Concrete (Using Simple Beam with Third-Point Loading).

B. C109 - Standard Test Method for Length Change of Hardened Hydraulic-Cement Mortar and Concrete.

C. C157 - Standard Test Method for Compressive Strength of Hydraulic Cement Mortars.

D. C348 - Standard Test Method for Flexural Strength of Hydraulic Cement Mortars.

E. C496 - Standard Test Method for Splitting Tensile Strength of Cylindrical Concrete Specimens.

F. C666 - Standard Test Method for Resistance of Concrete to Rapid Freezing and Thawing.

G. C672 - Standard Test Method for Scaling Resistance of Concrete Surfaces Exposed to Deicing Chemicals.

H. C882 - Standard Test Method for Bond Strength of Epoxy-Resin Systems Used with Concrete by Slant Shear.

I. C884 - Standard Test Method for Thermal Compatibility Between Concrete and an Epoxy-Resin Overlay.

J. C1042 - Standard Test Method for Bond Strength for Latex Systems Used with Concrete by Slant Shear.

K. C1202 - Standard Test Method for Electrical Indication of Concrete's Ability to Resist Chloride Ion Penetration.

1.4 SYSTEM DESCRIPTION

A. General: Structural repair concrete composed of cementitious material capable of being placed in formed vertical and overhead applications, and on horizontal surfaces.

B. Design Requirements:

1. Provide material suitable for performing in environments subject to corrosive attack by chlorides and sulfates, freeze/thaw cycles, low permeability, and abrasion resistant.

2. Provide concrete repair mortar cement that is placeable from 1 inch in depth and extendable in greater depths.

3. Concrete repair mortar shall be capable of being poured in place or troweled in place to suit the conditions encountered.

1.5 SUBMITTALS

A. Product Data: Submit manufacturer's data completely describing structural repair concrete materials.

B. Certificates of Compliance.

C. Manufacturer's Instructions.

1.6 QUALITY ASSURANCE

A. Manufacturer Qualifications: The manufacturer of the specified product shall have been in existence, for a minimum of 10 years.

B. Allowable Tolerances: Deviation from plumb or level shall not exceed 1/8 inch within 10 feet in any direction, as determined with a 10 foot straight edge.

1.7 DELIVERY, STORAGE, AND HANDLING

A. Deliver the specified product in original, unopened containers with the manufacturer's name, labels, product identification, and batch numbers.

B. Store and condition the specified product as recommended by the Manufacturer.

C. Deliver, store and handle packaged materials in the manufacturer's original, sealed containers, each clearly identified with the manufacturer's name, and name and type of product.

D. Store materials subject to damage by dirt and moisture in a clean, dry location, off the ground and suitably protected.

1.8 PROJECT CONDITIONS

Existing Conditions: Existing concrete sidewalks surround the location of the new concrete equipment slabs. This specification is included in case of damage to existing concrete.

A. Hot Weather: ACI 305.

B. Cold Weather: ACI 306.

C. Do not place concrete repair mortar during precipitation, unless adequate protection is provided.

PART 2 MATERIALS

2.1 MATERIALS

A. Structural Repair Concrete:

1. Manufacturers: One of the following or equal:
    a. Master Builders, "EMACO S66-CR".
    b. Sika, "Sikatop 123 Plus".
2. Compressive Strength: as follows in accordance with ASTM C109:
    a. One day: 2,500 pounds per square inch, minimum.
    b. Seven day: 6,000 pounds per square inch, minimum.
    c. Twenty-eight day: 8,000 pounds per square inch, minimum.

3. Bond Strength: 2,200 pounds per square inch minimum at 28 days, in accordance with ASTM C882 Modified.

4. Slant Shear Bond Strength: 3,300 pounds per square inch minimum at 28 days, in accordance with ASTM C496.

5. Flexural Strength: 770 pounds per square inch minimum at 28 days, in accordance with ASTM C78.

6. Rapid Freeze/Thaw Durability: in accordance with ASTM C866; Procedure A.

   a. Relative Durability Factor at 300 Cycles: 90 minimum.

7. Working Time: 30 to 40 minutes.

8. Color: Concrete grey.

B. Water: Potable, clean, not detrimental to concrete.

C. Form Materials:

1. Smooth Finish: Plywood, sheet metal, or lined wood forms.

2. Brace as required to maintain tolerances.

PART 3 EXECUTION

3.1 EXAMINATION

Verify that concrete surfaces and exposed reinforcing are clean and free of contaminates.

3.2 PREPARATION

A. Prepare existing concrete by cleaning with steel brush and applying bonding agent in accordance with manufacturer's instructions.

B. Thoroughly clean reinforcement and other embedded items to remove loose rust and other objectionable matter.

C. Thoroughly wet wood forms, except coated plywood, and adjacent concrete at least one hour in advance of placing concrete; securely close cleanout end inspection ports; repeat wetting as necessary to keep forms damp.

D. Damaged Concrete:

1. Areas to be repaired shall be clean, sound, and free of contaminants. Remove all loose and deteriorated concrete by mechanical means acceptable to the Engineer. Saw cut perimeter 1/2 inch maximum.

2. Chip concrete substrate to obtain a surface profile of 1/16 inch to 1/8 inch in depth with a new fractured aggregate surface. The area to be repaired shall be not less than 1 inch in depth.

3. Concrete removal shall extend along the reinforcing steel to locations along the bar free of bond inhibiting corrosion, and where the bar is well bonded to surrounding concrete.

E. Use the following procedures where reinforcing steel with active corrosion is encountered:

1. Sandblast reinforcing steel to remove all contaminants and rust.

2. Determine section loss, splice new reinforcing steel where there is more than 15 percent loss as directed by the Engineer. If more than half the diameter of the reinforcing steel is exposed, chip out behind the reinforcing steel a minimum of 1/2 inch. The distance chipped behind the reinforcing steel must also equal or exceed the minimum placement depth of the accepted material.

F. Treat cracks in the substrate at the area of patching or overlay work as directed by the Engineer.

G. Extend existing control and expansion joints through any concrete repair.

H. Apply an epoxy bonding agent to area to be repaired, as specified in Section 03071, prior to patching concrete with polymer-modified Portland cement mortar.

3.3 MIXING

Mix in accordance with manufacturer's mixing instructions.

3.4 INSTALLATION

A. Formed Surface Finishes:

1. Smooth Finish: Obtain by the use of plywood, sheet metal, or lined wood forms; no fins, pockmarks, and other irregularities shall be present in the exposed surfaces of concrete. Place no structural repair concrete without prior authorization of Engineer.

B. Verify that form materials are in place and ready to receive installation of concrete repair material.

C. Install in accordance with manufacturer's installation instructions.

D. In accordance with ACI recommendations, apply concrete repair material only when ambient conditions of moisture, temperature, humidity, and wind are favorable for curing.

E. Scrub mortar into substrate, filling all cracks, voids and pores.

F. For new construction, finish of repaired area shall match required finish for concrete being repaired. For existing concrete, finish of repair area shall match finish of concrete being repaired.

G. During the curing process, protect concrete repair from rain, wind, or freezing as required. Keep sufficient covering on hand at all times for protection of repair concrete.

3.5 CLEANING

Remove debris and excess material. Leave work site in a neat, clean condition.

END OF SECTION

SECTION 05120

STRUCTURAL STEEL

PART 1 GENERAL

1.1 DESCRIPTION

The work of this section consists of furnishing, fabricating, and erecting of Structural Steel, as defined in AISC 303 Code of Standard Practice for Steel Buildings and Bridges, latest edition.

Except as otherwise provided herein, the design, fabrication and erection shall be in accordance with the applicable provisions of the AISC 360 "Specification for Structural Steel Buildings", edition as referenced in the governing CBC.

1.2 RELATED SECTIONS

A. Section 01300 - Submittals

B. Section 01640 - Product Handling

C. Section 05500 - Metal Fabrications

D. Section 05530 - Gratings, Stair Treads & Floor Plates

E. Section 09900 – Painting and Finish Schedule

1.3 GOVERNING CODES AND STANDARDS

Furnishing and installing structural steel shall conform to the following:

A. 2022 California Building Code (CBC).

B. AISC - Steel Construction Manual, 15th edition.

C. AISC 303-16 - Code of Standard Practices for Steel Buildings and Bridges.

D. AISC 360-16 - Specification for Structural Steel for Buildings.

E. ASTM - Applicable Standards

F. AWS D1.1 - Structural Welding Code Standard

1.4 QUALITY ASSURANCE

A. Use adequate numbers of skilled workmen who are thoroughly trained and experienced in the necessary crafts and who are completely familiar with the specified requirements and the methods needed for proper performance of the work of this section.

B. Qualify welding processes and welding operators in accordance with AWS “Standard Qualification Procedures.”

1.5 SUBMITTALS

A. Comply with pertinent provisions of Section 01300.

B. Product data to be submitted:

1. Producers' or manufacturers' specifications and installation recommendations for the following products, including laboratory test reports and other data required to prove compliance with the specified requirements.

a. Structural steel, including certified copies of mill test reports covering chemical and physical properties;

b. High strength bolts, including nuts and washers;

c. Finished bolts and nuts;

d. Structural steel primer paint.

2. Shop Drawings including complete details and schedules for fabrication, shop assembly of members, erection procedure, including sequence of erection and temporary staying and bracing.

a. Include details of cuts, connections, camber, holes, and other pertinent data;

b. Indicate welds, both shop and field, by AWS symbols, and show size, type, and length of weld;

c. Provide setting drawings, templates, and directions for installing anchor bolts and other required anchors;

d. Identify details by reference to sheet and detail number of the Drawings.

1.6 PRODUCT HANDLING

A. Comply with pertinent provisions of Section 01640.

B. Delivery and Storage:

1. Deliver materials to the job site properly marked to identify the location for which they are intended.

2. Use markings corresponding to markings shown on the approved Shop Drawings.

3. Store in a manner to maintain identification and to prevent damage.

PART 2 MATERIALS

2.1 MATERIALS

A. Rolled shapes, steel plates and bars:

1. Rolled W, WT shapes: Comply with ASTM A992, Grade 50

2. Miscellaneous Steel: Comply with ASTM A36

B. Steel Joists: Conform to SJI and AISI "Standard Specifications for Steel Joists J Series and H Series"

C. Steel Pipe: Comply with ASTM A53, Standard Weight (Schedule 40), type E or S, grade B and, where applicable, API-5L, grade B.

D. Square and Rectangular Steel tube: Comply with ASTM A500, Grade B.

E. Anchor bolts: Comply with ASTM A307, non-headed type with heavy hexagonal nuts unless otherwise indicated.

F. Finished threaded fasteners:

1. Comply with ASTM A307, grade A, regular low carbon steel bolts and nuts.

2. Provide either hexagonal or square heads and nuts; except use only hexagonal units for exposed connections. Exposed assemblies shall be zinc phosphate coated.

G. High strength threaded fasteners: Provide heavy hexagonal structural bolts, heavy hexagonal nuts, and hardened washers, all from quenched and tempered medium carbon steel complying with ASTM A325, zinc phosphate coating.

H. Stainless steel fasteners: For wet or submerged service, all bolts, nuts, and flat washers, Type 316 stainless steel, ASTM F593 and F594, Group 2.

I. Wedge Anchors (WA): Type 303 or 304 stainless steel ITW Redhead Trubolt Wedge or Hilti Kwikbolt-TZ or equal and meeting 2022 CBC cracked section requirements.

J. Expansion Anchors (EA): Similar to wedge anchors.

K. Adhesive Anchors: Type 303 or 304 stainless steel with Hilti RE 500-V3 system Simpson SET-XP, or equal and meeting 2022 CBC cracked section requirements.

L. Stud Anchors: Shall be H4L mild steel concrete anchors, as manufactured by TRW Inc., Nelson Division, Lorain, Ohio 44055, or equal. Stud anchors shall be of a design suitable for arc welding to steel with automatically timed stud welding equipment.

M. Filler Metal for Welding:

1. ASTM A36 and ASTM A500, Grade B: AWS A5.1 or A5.5 E70XX low hydrogen electrodes for shielded metal arc welding.

2. Stainless Steel Type 316L: ER316L.

N. Nonshrink Grout: As specified in Section 03100.

O. Primer: As specified in Section 09900.

P. All stainless-steel parts, after its fabrication, shall undergo a passivation (pickling) process to ensure maximum resistance to corrosion. All stainless-steel components and structures shall be submersed in a chemical bath of nitric acid and hydrofluoric acid to remove any residues that may be present on the material as a result of forming, manufacture, or handling. After removal from the pickling bath, the equipment must be washed with a high-pressure wash of cold water to remove any remaining surface debris and promote the formation of an oxidized passive layer which is critical to the long life of the stainless steel. Submergence insures complete coverage. Spray on chemical treatments and glass bead blasting are specifically not acceptable due to their inability to provide complete and uniform corrosion protection. All field welds shall be cleaned and passivated to remove iron (and prevent corrosion) in accordance with ASTM A380.

2.2 FABRICATION

A. Shop Fabrication and Assembly:

1. Fabricate items of structural steel in accordance with AISC specifications, and as indicated on the approved Shop Drawings. Structural material shall be fabricated and assembled in the shop to the greatest extent possible.

2. For Structural members such as W Shapes, S Shapes, Channels, Angles, and similar members not available in quantity, size, and type of stainless steel specified or indicated on the Drawings.

a. Fabricate by welding together pieces of low carbon stainless steel plate, such as 316L.
b. Make full penetration welds between pieces of plate to attain same or higher section modulus and moment of inertia as members indicated on the Drawings.

3. Properly mark and match-mark materials for field assembly and for identification as to location for which intended.

4. Fabricate for delivery sequence which will expedite erection and minimize field handling of materials.

5. Where finishing is required, complete the assembly, including welding of units, before start of finishing operations.

6. Provide finish surfaces of members exposed in the final structure free from markings, burrs, and other defects.

B. Bolted Connections:

1. Provide bolts and washers of types and sizes required for completion of field erection.

2. High strength bolted construction:

a. Install high strength threaded fasteners in accordance with AISC "Specifications for Structural Joints Using High-Strength Bolts."

b. Use ASTM F3125 Grade A325N bolts unless noted otherwise.

C. Holes for Other Work:

1. Provide holes required for securing other work to structural steel framing, and for passage of other work through steel framing members, as shown on the approved Shop Drawings.

2. Provide threaded nuts welded to framing, and other specialty items as shown, to receive other work.

3. Cut, drill, or punch holes perpendicular to metal surfaces.

4. Do not flame cut holes or enlarge holes by burning.

5. Drill holes in bearing plates.

2.3 WELDING

A. General: Members of structural steel and metalwork which are to be joined by welding shall be cut accurately to size, and where required, shall be rolled or pressed to the proper curvature in accordance with dimensions shown on the drawings. The edges of these members shall be sheared, flame-cut or machined to suit the required type of welding and to allow thorough penetration. The cut surface shall expose sound metal free from

laminations, surface defects caused by shearing or flame-cutting operations, or other injurious defects.

The surface of plates to be welded shall be free from rust, grease, and other foreign matter for a distance of at least one-half inch back from the edge of the weld. All welding shall be performed by the electric-arc method, by a process which will exclude the atmosphere from the molten metal. Shop welding shall be performed where practicable, under procedure control using automatic machines. Particular care shall be taken in aligning and separating the edges of members to be jointed by butt welding, so that complete penetration and fusion at the bottom of the joint will be assured. Where fillet welds are used, the members shall fit closely and shall be held together during welding.

B. Codes: All welding shall be in conformance with AWS D1.1, latest edition, and the steel fabricator's specific recommendations.

C. Workmanship and Visual Quality Requirements: In addition to conformance with the procedural and quality requirements set forth in the applicable code and/or the Contract, all manual welding shall meet the following requirements for workmanship and visual quality.

1. Each weld shall be uniform in width and size throughout its full length and each layer of welding shall be smooth, free of slag, cracks, pinholes and undercut, and shall be completely fused to the adjacent weld bead and base metal. In addition, the cover pass shall be free of coarse ripples, irregular surfaces, non-uniform bead pattern, high crown, deep ridges or valleys between beads, and shall blend smoothly and gradually into the surface of the base metal.

2. Butt welds shall be slightly convex, of uniform height, and shall have full penetration.

3. Fillet welds shall be of specified size, with full throat and with legs of equal length.

4. Repair, chipping or grinding of welds shall be done in such a manner as not to gouge, groove, or reduce the base metal thickness.

D. Qualification of Welders and Welding Operators: All welders and welding operators assigned to the work shall have passed the qualification test for welding operators as specified in AWS D1.1. If, in the opinion of the Engineer, the work of any welder appears questionable, such welder will be required to pass additional qualification tests to determine his ability to perform the type of work on which he is engaged. Such additional qualification test for welders and the physical tests of the welded specimens shall be made in the presence of the Engineer. The test plates shall be of the same material as that to be used in the work. The welding electrodes shall be of the same size, type and brand as those to be used in the work. If required, the Contractor shall furnish to the Engineer a certified copy of reports of the results of physical tests of specimens welded in the qualification tests. All expense in connection with making the qualification tests for welders and welding operators shall be borne by the Contractor.

2.4 SHOP PAINTING

A. General:

1. Shop paint structural steel work, except those members or portions of members to be embedded in concrete or mortar.

2. Paint embedded steel, which is partially exposed, on the exposed portions, and the initial 2" of embedded areas only.

3. Do not paint surfaces which are to be welded or high-strength bolted with friction type connections.

4. Apply two coats of paint to surfaces which are inaccessible after assembly or erection. Change color of the second coat to distinguish it from the first.

B. Surface Preparation:

1. After inspection and before shipping, clean steelwork to be painted.

2. Remove loose rust, loose mill scale, and spatter, slag, and flux deposits.

3. Prepare the steel surface in accordance with the requirements of Section 09900. If not specified, clean steel in accordance with Steel Structures Painting Council (SSPC) SP-3, "Power Tool Cleaning."

C. Painting:

1. Immediately after surface preparation, apply structural steel primer paint in accordance with the manufacturer's recommendations and at a rate to provide a uniform dry film thickness.

2. Use painting methods which will result in full coverage of joints, corners, edges, and exposed surfaces.

3. The Contractor shall be responsible for providing the required coating system per Section 09900. The Contractor shall remove shop coatings not in conformance with Section 09900. Additionally, the Contractor shall prepare any shop applied coating, which, while meeting the requirements of Section 09900, requires additional surface preparation in order to obtain a mechanical bond between coatings.

2.5 GALVANIZING

A. Structural steel to be galvanized after fabrication is shown on the drawings.

B. Structural steel to be galvanized after fabrication shall be hot-dip processed in accordance with ASTM A123, A152, A386, and A525.

C. For repair of galvanizing, use a high zinc-dust content paint complying with MIL-P-21035.

PART 3 EXECUTION

3.1 SURFACE CONDITIONS

Examine the areas and conditions under which work of this section will be performed. Correct conditions detrimental to timely and proper completion of the Work. Do not proceed until unsatisfactory conditions are corrected.

3.2 ERECTION

A. Comply with AISC specifications and "Code of Standard Practice," except as may be modified herein.

B. Anchor Bolts:

1. Provide anchor bolts and other connectors required for securing structural steel to foundations and other in-place work.

2. Provide templates and other devices necessary for presetting bolts and anchors to accurate locations.

C. Stud Welding: Stud anchors shall be automatically end welded with suitable stud welding equipment in the shop on spacings as shown. All welds shall be made in accordance with Section 4, Part F of the AWS D1.1 Structural Welding Code and with the stud anchor manufacturer.

D. Bases and Bearing Plates: Shop weld to columns and members attached to concrete.

E. Splicing:

1. Splice members only where indicated unless, with the Engineer's approval, splices not indicated would result in lower costs due to reduced shipping expense.

2. For splices not indicated, submit structural calculations prepared and stamped by a civil or structural engineer licensed to practice in California.

F. Gas Cutting:

1. Do not use gas cutting torches for correcting fabricating errors in the structural framing.

2. Cutting will be permitted only in secondary members as acceptable to the Engineer.

3. When gas cutting is permitted, finish the gas cut section to a sheared appearance acceptable to the Engineer.

G. Surveys:

1. Establish permanent benchmarks necessary for accurate erection of structural steel.
2. Check elevations of concrete surfaces, and locations of anchor bolts and similar items, before erection proceeds.

H. Temporary Shoring and Bracing:

1. Provide temporary shoring and bracing members with connections of sufficient strength to bear imposed loads.
2. Provide temporary guy lines to achieve proper alignments of the structure as erection proceeds.
3. Remove temporary connections and members when permanent members are in place and the final connections have been made.

I. Setting Bases and Bearing Plates:

1. Clean concrete bearing surfaces free from bond-reducing materials, and then roughen to improve bond to the surface.
2. Clean the bottom surface of base and bearing plates.
3. Set loose and attached base plates and bearing plates for structural members in wedges or other adjusting devices.
4. Tighten anchor bolts after the supported members have been positioned and plumbed.
5. Do not remove wedges or shims but, if protruding, cut off flush with the edge of the base or bearing plate prior to packing with grout.
6. Pack grout solidly between bearing surfaces and bases or plates to assure that no voids remain.
7. Finish exposed surfaces, protect installed materials, and allow to cure in strict compliance with the manufacturers' recommendations as approved by the Engineer.
8. Refer to Section 05500 3.3.A.6 for steel plates in contact with dissimilar materials.

J. Field Assembly:

1. Set structural frames accurately to the lines and elevations indicated.
2. Align and adjust members forming part of a complete frame or structure before fastening permanently.
3. Clean the bearing surface, and other surfaces which will be in permanent contact, before assembly.
4. Adjust as required to compensate for discrepancies in elevation and alignment.
5. Level and plumb individual members of the structure within specified AISC tolerances.

6. Establish required leveling and plumbing measurements on the mean operating temperature of the structure, making allowances for the difference between temperature at time of erection and the mean temperature at which the structure will be when completed and in service.

7. Comply with AISC specifications for bearing, adequacy of temporary connections, alignment, and the removal of paint on surfaces adjacent to welds.

3.3 QUALITY ASSURANCE AND QUALITY CONTROL

A. Quality Assurance shall be provided as required by the CBC, AISC 360, and AISC 341.
   1. Special Inspections and Tests requirements indicated in the CBC Chapter 17, and Quality Assurance requirements indicated in AISC 360 Chapter N and AISC 341 Chapter J, will be provided by and paid for by the Owner.
   2. Structural Observations, if required by the Building Official or requested by the Owner, will be provided by and paid for by the Owner.
   3. Contractor Responsibility requirements indicated in the CBC Chapter 17 shall be provided by and paid for by the Contractor.

B. The Contractor shall be aware of all Quality Assurance requirements, and shall provide advance notice and full access to the Owner and Engineer to conduct the inspections, tests, and observations.
   1. For inspections and tests at locations away from the project site, a minimum of 14 days' notice shall be provided in writing.
   2. For inspections, tests and observations at the project site, a minimum of 7 days' notice shall be provided in writing.
   3. The Contractor shall provide safe access, including fall protection equipment, to all locations necessary to conduct the inspections, tests, and observations.

C. The Contractor shall supply material for testing at no cost to the Owner and shall assist the Engineer in obtaining material for test samples.

D. The Contractor shall correct or repair all defective Work. All costs associated with corrections, repairs, and retesting shall be paid for by the Contractor.

E. Quality Control shall be provided as required by AISC 360 and AISC 341.
   1. Quality Control requirements indicated in AISC 360 Chapter N and AISC 341 Chapter J shall be provided by and paid for by the Contractor.

3.4 FIELD PAINTING

A. General:

   1. Prepare surfaces in compliance with Section 09900, Painting, and in a manner appropriate to the condition, and as approved by the Engineer.

2. Clean surfaces where primer coats have been removed, damaged, or burned off, and clean field bolts and other field connections not concealed in the finished work.

3. Remove dirt, oil, and grease, and prepare surface in accordance with the requirements of Section 09900.

4. Apply a spot coat of the approved primer coat in accordance with Section 09900.

5. Do not apply paint to wet, damp, oily, or improperly prepared surfaces.

B. Notify the Engineer when the work of this section is ready to receive field painting.

1. Secure inspection and approval by the Engineer prior to field painting.

2. Using spray or brush, as recommended by the manufacturer of the approved paint material, fill all joints and corners and cover the surfaces to be protected with a smooth unbroken film of at least 1.5 dry mils thickness.

3.5 FIELD TOUCH-UP OF GALVANIZED SURFACES

A. After installation, clean damaged surfaces of galvanized metals and touch-up with zinc dust-zinc oxide coating conforming to Military Specification MIL-P-211035.

B. Field work shall not be permitted on galvanized items.

END OF SECTION

SECTION 05140

STRUCTURAL ALUMINUM

PART 1 GENERAL

1.1 SUMMARY

Section includes structural aluminum products, including sheet, pipe, extrusions, and associated accessories.

1.2 RELATED SECTIONS

A. Section 01300 - Submittals

B. Section 05120 - Structural Steel

C. Section 05500 - Metal Fabrications

D. Section 09900 - Painting

1.3 REFERENCES

A. 2022 California Building Code (CBC).

B. American Society for Testing and Materials (ASTM):

1. B209 - Standard Specification for Aluminum and Aluminum-Alloy Sheet and Plate.
2. B221 - Standard Specification for Aluminum and Aluminum-Alloy Extruded Bars, Rods, Wire, Shapes, and Tubes.
3. B308/B308M - Standard Specification for Aluminum-Alloy 6061 -T6 Standard Structural Shapes.

C. American Welding Society (AWS):

1. A 5.10 - Specification for Bare Aluminum and Aluminum-Alloy Welding Electrodes and Rods.
2. D 1.2 - Structural Welding Code - Aluminum.

D. "Aluminum Structures - A Guide to Their Specifications and Design" by Aluminum Association, Inc.

1.4 SUBMITTALS

Quality Control Submittals:

A. Design Data:

1. Test Reports: Certified copies of mill tests or reports from a recognized commercial laboratory including chemical and tensile properties of each shipment of structural metal or part thereof having common properties. Tests and analyses shall be made in accordance with applicable ASTM Standards.

1.5 QUALITY ASSURANCE

Qualifications:

A. Perform welding of structural metals with welders who have current American Welding Society certificate for the type of welding to be performed.

B. Notify Engineer 24 hours minimum before starting shop or field welding.

C. Engineer may check materials, equipment, and qualifications of welders.

D. Remove welders performing unsatisfactory work, or require to requalify.

E. Engineer may use gamma ray, magnetic particle dye penetrant, or other aids to visual inspection to examine any part of welds or all welds.

F. Contactor shall bear costs of retests on defective welds.

G. Contractor shall also bear costs in connection with qualifying welders.

PART 2 MATERIALS

2.1 MATERIALS

A. Structural Sheet Aluminum: ASTM B209, Alloy 6061-T6.

B. Structural Aluminum: ASTM B308, Alloy 6061-T6.

C. Extruded Aluminum: ASTM B221, Alloy 6063-T42.

D. Miscellaneous Materials:

1. Furnish supplementary parts necessary to complete each item even where such work is neither definitely indicated on the Drawings nor specified.

2. Size, form, attachment, and location shall conform to the best of current practice.

3. Conform to applicable ASTM Standards for materials not otherwise specified.

2.2 FABRICATION

A. Aluminum Layout:

1. Center punch hole centers, and punch or scribe cutoff lines, except where marks would remain on fabricated material.

2. Apply temperature correction where necessary in layout of critical dimensions. Use a coefficient of expansion of 0.000013 per degree of Fahrenheit.

B. Cutting Aluminum:

1. Material 2 Inch Thick or Less: Shear, saw, or cut with a router.

2. Material More than 2 Inch Thick: Saw or rout.

3. Make cut edges true and smooth, free from excessive burrs or ragged breaks.

4. Avoid reentrant cuts wherever possible. Where used, fillet by drilling prior to cutting.

5. Do not flame cut aluminum alloys.

6. Punch or drill rivet or bolt holes to finished size before assembly.

a. Make finished diameter of holes for bolts 1/16 inch maximum larger than nominal bolt diameter.

b. Make holes cylindrical and perpendicular to principal surface.

c. Do not permit holes to drift in a manner to distort metal.

C. Aluminum Forming and Assembly:

1. Do Not Heat Structural Aluminum, Except as Follows:

a. Heat aluminum to 400 degrees Fahrenheit for 30 minutes maximum, to facilitate bending or welding.

b. Heat only when proper temperature controls and supervision can ensure that limitations on temperature and time are observed.

c. Before assembly, remove chips lodged between contacting surfaces.

D. Welding Aluminum:

1. Perform welding of aluminum in accordance with AWS D1.2, "Structural Welding Code - Aluminum."

2. Weld Aluminum in Accordance with the following:

a. Preparation:

1) Remove dirt, grease, forming or machining lubricants, and organic materials from areas to be welded by cleaning with a suitable solvent or by vapor degreasing.

2) Additionally, etch or scratch brush to remove oxide coating just prior to welding when inert gas tungsten arc welding method is used.

3) Oxide coating may not need to be removed if welding is performed by automatic or semi-automatic inert gas shielded metal arc.

4) Suitably prepare edges to assure 100 percent penetration in butt welds by sawing, chipping, machining, or shearing. Do not cut with oxygen.

b. Filler Metal: Aluminum alloys conforming to the requirements of AWS A5.10 and AWS classification ER 4043, ER 5654, ER 5554, ER 5183, ER 5356, or ER 556.

c. Perform welding of structures which are to be anodized using filler alloys which will not discolor when anodized, AWS ER 5654, ER 5554, ER 5183, ER 5356, or ER 5556.

d. Perform welding by using a nonconsumable tungsten electrode with filler metal in an inert gas atmosphere (TIG) or using a consumable filler metal electrode in an inert gas atmosphere (MIG).

e. Do not use welding process that requires use of a welding flux.

f. Neatly make welded closures.

g. Where weld material interferes with fit or is unsightly in appearance, grind it smooth.

h. Make welds full penetration welds unless otherwise indicated on the Drawings.

PART 3 EXECUTION

3.1 EXAMINATION

Verification of Conditions: Examine Work in place to verify that it is satisfactory to receive the Work of this Section. If unsatisfactory conditions exist, do not begin this Work until such conditions have been corrected.

3.2 INSTALLATION

A. Install structural aluminum products as indicated on the Drawings and specified.

B. Install structural aluminum products accurately and securely, true to level, plumb, in correct alignment and grade, with all parts bearing or fitting structure or equipment for which intended.

C. Do not cock out of alignment, redrill, reshape, or force fit fabricated items.

D. Place anchor bolts or other anchoring devices accurately and make surfaces which bear against structural items smooth and true to level.

E. Rigidly support and brace structural products needing special alignment to preserve straight, level, even, smooth lines, and keep braced until concrete, grout, or dry pack mortar has hardened for a minimum 48 hour period.

F. Interface with Other Products:

1. Where aluminum comes in contact with dissimilar metals bolt it with stainless steel bolts and separate or isolate it from dissimilar metals as specified in Section 05500 3.3.

2. Coat those parts of aluminum which will be cast into concrete with bituminous paint.

END OF SECTION

SECTION 05500

METAL FABRICATIONS

PART 1 GENERAL

1.1 DESCRIPTION

The work of this section consists of providing miscellaneous metal work shown on the Drawings, as specified herein, and as needed for a complete and proper installation.

1.2 RELATED SECTIONS

A. Section 01300 - Submittals

B. Section 05120 -Structural Steel

C. Section 05140 – Structural Aluminum

D. Section 09900 - Painting

1.3 GOVERNING COVER AND STANDARDS

A. 2022 California Building Code (CBC)

B. AA - The Aluminum Association “Specifications and Guidelines for Aluminum Structures”

1.4 QUALITY ASSURANCE

A. Use adequate numbers of skilled workmen who are thoroughly trained and experienced in the necessary crafts and who are completely familiar with the specified requirements and the methods needed for proper performance of the work of this section.

B. Perform shop and/or field welding required in connection with the work of this section in strict accordance with pertinent recommendations of the American Welding Society.

1.5 SUBMITTALS

A. In accordance with Section 01300.

B. Product data to be submitted:

1. Materials list of items proposed to be provided under this Section;

2. Manufacturer's specifications and other data needed to prove compliance with the specified requirements;

3. Shop Drawings in sufficient detail to show fabrication, installation, anchorage, and interface of the work of this Section with the work of adjacent trades;

4. Manufacturer's recommended installation procedures which, when approved by the Engineer, will become the basis for accepting or rejecting actual installation procedures used on the work.

PART 2 MATERIALS

2.1 MATERIALS

A. In fabricating items which will be exposed to view, limit materials to those which are free from surface blemishes, pitting, rolled trade names, and roughness.

B. Unless noted otherwise, comply with the following standards, as pertinent.

1. Steel plates, shapes, and bars: ASTM A36.

2. Rolled W and WT shapes: ASTM A992, Grade 50

3. Steel plates to be bent or cold-formed: ASTM A283, grade C.

4. Steel tubing (hot-formed, welded, or seamless): ASTM A501.

5. Steel bars and bar-size shapes: ASTM A306, grade 65, or ASTM A36.

6. Cold-finished steel bars: ASTM A108.

7. Cold-rolled carbon steel sheets: ASTM A336.

8. Galvanized carbon steel sheets: ASTM A526, with G90 zinc coating in accordance with ASTM A525.

9. Stainless steel bars, plates, structural shapes, ASTM A276, Type 304.

10. Stainless steel sheets: AISI type 302 or 304, 24 gauge, with Number 4 finish.

11. Aluminum plates, shapes, and bars, 6061-T6 or 6063-T6 alloy, mill finish unless otherwise specified.

12. Grey iron castings: ASTM A48, Class 40.

13. Malleable iron castings: ASTM A47.

14. Steel pipe: ASTM A120, schedule 40, black finish unless otherwise noted.

15. Concrete inserts:

    a. Threaded or wedge type galvanized ferrous castings of malleable iron complying with ASTM A27.

    b. Provide required bolts, shims, and washers, hot-dip galvanized in accordance with ASTM A153.

2.2 FABRICATION

A. Except as otherwise shown on the Drawings or the approved Shop Drawings, use materials of size, thickness, and type in accordance with this Section.

B. Fabricate with accurate angles and surfaces which are true to the required lines and levels, grinding exposed welds smooth and flush, forming exposed connections with hairline joints, and using concealed fasteners wherever possible.

C. Prior to shop painting or priming, properly clean metal surfaces as required for the applied finish and for the proposed use of the item.

D. On surfaces inaccessible after assembly or erection, apply two coats of the specified primer. Change color of second coat to distinguish it from the first.

E. Properly mark and match-mark materials for field assembly and for identification as to location for which intended.

F. Fabricate for delivery sequence which will expedite erection and minimize field handling of materials.

G. Where finishing is required, complete the assembly, including welding of units, before start of finishing operations.

H. Provide finish surfaces of members exposed in the final structure free from markings, burrs, and other defects.

2.3 CASTINGS

A. All castings shall be sound and free from shrinkage crack, blow holes, and other defects. All fins and burnt sand must be removed. Excessive porosity and spongy surfaces will constitute causes for rejection. The Engineer shall be final judge as to whether the defects present are sufficient to cause rejection.

B. No welding or patching of defects in castings will be permitted unless authorized by the Engineer. Any such welding or patching done without the Engineer's consent shall be cause for rejection.

C. All castings shall be true to form and dimensions shown on the Drawings. After inspection and prior to shipping, all machined surfaces shall be coated with a blue rust inhibitive lacquer, or other approved material which can be easily removed, unless otherwise specified.

D. The dimensions of the finished castings shall not be less than the specified dimensions. Castings shall not be more than seven and one-half (7-1/2) percent overweight. Large castings shall be suspended and hammered over their entire area. No cracks, flaws, or other defects shall appear after such hammering.

E. Castings shall be provided with adequate continuous fillets cast in place in all re-entrant angles. The radius of curvature of the exposed surface of a fillet shall define the size of the fillet. The size of fillets shall not be less than one-half (1/2) of the thickness of the thinnest adjoined member nor less than one-half (1/2) inch.

F. Iron castings shall be dipped or painted with asphalt which will form a tough, tenacious, non-scaling coating which does not have a tendency to become brittle when cold or sticky when hot.

G. The covers and seats shall be machined so that the cover sits evenly and firmly in the frame.

2.4 CONNECTIONS

A. Provide bolts and washers of types and sizes required for completion of field erection.

B. Welded Construction: Comply with AWS Code for procedures, appearance, and quality of welds, and methods used in correcting welded work.

C. Assemble and weld built-up sections by methods which will produce true alignment of axes without warp.

2.5 FASTENERS

A. General:

1. For exterior use and where built into exterior walls, provide zinc-coated fasteners, for damp locations provide stainless steel fasteners.

2. Provide fasteners of type, grade, and class required for the particular use.

B. Comply with the following standards as pertinent:

1. Bolts and Nuts: Provide hexagon-head regular type complying with ASTM A307, Grade A (Steel); ASTM A320 and A194, Grade B8 (Stainless Steel).

2. Lag bolts: Provide square-head type complying with Fed. Spec. FF-B-561.

3. Machine Screws: Provide cadmium plated steel type complying with Fed. Spec. FF-S-111; except use stainless steel for damp locations or with aluminum.

4. Washers:

a. Plain washers: Comply with Fed Spec FF-W-92, round, carbon steel.

b. Lock washers: Comply with Fed. Spec FF-W-84, helical spring type carbon steel.

5. Toggle bolts: Provide type, class, and style needed but complying with Fed. Spec. FF-B-588.

6. Anchorage devices: Provide expansion shield complying with Fed Spec FF-S-325.

2.6 HOLES FOR OTHER WORK

A. Provide holes required for securing other work to metalwork and for passage of other work as shown on the approved Shop Drawings.

B. Provide threaded nuts welded to framing and other specialty items as shown, to receive other work.

C. Cut, drill, or punch holes perpendicular to metal surfaces.

D. Do not flame cut holes or enlarge holes by burning.

E. Drill holes in bearing plates.

2.7 OTHER MATERIALS

Provide other materials, not specifically described but required for a complete and proper installation, as selected by the Contractor subject to the approval of the Engineer.

2.8 GALVANIZING

A. Shall be double hot-dip processed after fabrication, ASTM A123, A153, A386, and A525. Double dip shall be required, if necessary, to achieve required coating weight.

B. For repair of galvanizing, use galvaloy stick applied as recommended by the manufacturer.

2.9 SHOP PRIMING and FINISHES

A. General:

1. Shop prime un-galvanized steel work, except those members or portions of members to be embedded in concrete or mortar.

2. Paint embedded steel which is partially exposed on the exposed portions, and the initial 2" of embedded areas only.

B. Surface Preparation:

1. After inspection and before shipping, clean steelwork to be painted.

2. Remove loose rust, loose mill scale, and spatter, slag, and flux deposits.

3. Prepare steel in accordance Section 09900. If not specified, prepare steel in accordance with Steel Structures Painting Council SP-3, "Power Tool Cleaning."

C. Primer Painting:

1. Immediately after surface preparation, apply structural steel primer paint in accordance with Section 09900 and the manufacturer's recommendations and at a rate to provide a uniform dry film thickness.

2. Use painting methods which will result in full coverage of joints, corners, edges, and exposed surfaces.

3. The Contractor shall be responsible for providing the required coating system per Section 09900. The Contractor shall remove shop coatings not in conformance with Section 09900. Additionally, the Contractor shall prepare any shop applied coating, which, while meeting the requirements of Section 09900, requires additional surface preparation in order to obtain a mechanical bond between coatings.

D. All stainless-steel parts, after its fabrication, shall undergo a passivation (pickling) process to ensure maximum resistance to corrosion. All stainless-steel components and structures shall be submersed in a chemical bath of nitric acid and hydrofluoric acid to remove any residues that may be present on the material as a result of forming, manufacture, or handling. After removal from the pickling bath, the equipment must be washed with a high-pressure wash of cold water to remove any remaining surface debris and promote the formation of an oxidized passive layer which is critical to the long life of the stainless steel. Submergence ensures complete coverage. Spray on chemical treatments and glass bead blasting are specifically not acceptable due to their inability to provide complete and uniform corrosion protection. All field welds shall be cleaned and passivated to remove iron (and prevent corrosion) in accordance with ASTM A380.

PART 3 EXECUTION

3.1 SURFACE CONDITIONS

Examine the areas and conditions under which work of this Section will be performed. Correct conditions detrimental to timely and proper completion of the work. Do not proceed until unsatisfactory conditions are corrected.

3.2 COORDINATION

Coordinate as required with other trades to assure proper and adequate provision in the work of those trades for interface with the work of this Section.

3.3 INSTALLATION

A. General:

1. Set work accurately into position, plumb, level, true, and free from rack.
2. Anchor firmly into position.
3. Where field welding is required, comply with AWS recommended procedures of manual-shielded metal-arc-welding for appearance and quality of weld and for methods to be used in correcting welding work.
4. Grind exposed welds smooth, and touch-up shop prime coats.
5. Do not cut, weld, or abrade surfaces which have been hot-dip galvanized after fabrication and which are intended for bolted or screwed field connections.
6. Dissimilar Materials: Where dissimilar metals are in contact, or where aluminum is in contact with concrete, mortar, masonry, wet or pressure treated wood, or absorptive materials subject to wetting, the surfaces shall be protected with a coat of

bituminous paint conforming to MIL-C-18480 or to TT-V-51 or a coat of zinc chromate primer conforming to TT-P-645 to prevent galvanic or corrosive action.

7. Materials and parts necessary to complete each item, even though such work is not definitely shown or specified, shall be included. All bolts, anchors, supports, braces, connection and other items necessary for completion of the miscellaneous metalwork shall be provided.

B. Immediately after erection, clean the field welds, bolted connections, and abraded areas of shop priming. Paint the exposed areas with same material used for shop priming.

END OF SECTION

SECTION 05521

PIPE RAILING

PART 1 GENERAL

1.1 DESCRIPTION

The work of this section consists of furnishing and installing aluminum handrails and guardrails as shown on the Drawings.

1.2 RELATED SECTIONS

A. Section 01300: Submittals

B. Section 05500: Metal Fabrications

1.3 GOVERNING CODES AND STANDARDS

A. 2022 California Building Code (CBC)

B. Applicable ASTM Standards

C. National Association of Architectural Metal Manufactures (NAAMM):

1. Pipe Railing Manual, Including Round tube

D. American Welding Society Standard AWS D1.1

E. Applicable SSPC Standards

F. Applicable OSHA Standards

1.4 QUALITY ASSURANCE

A. Standards: California Building Code, California Industry Safety Orders and manufacturers' printed recommendations.

B. All handrails and guardrails shall be fabricated by one manufacturer, including hardware, accessories, mounting, and installation components.

1.5 SUBMITTALS

A. In accordance with Section 01300.

B. Shop Drawings: Submit prior to fabrication.

1. Drawings shall show clearly all materials, finishes, connecting and joining methods, dimensions, installation details, and relationship to adjoining work by others. No fabrication work shall be started until shop drawings have been approved. Any errors in dimensions shown will be the responsibility of the Contractor.

2. Provide structural calculations for the rail system substantiating that the rail system meets the requirements of the California Building Code. The design load shall be a horizontal load of 50 lbs per ft on the top rail and a 200 lb horizontal load anywhere along the top rail. The loads do not need to be concurrent. Calculations shall substantiate the pipe rail, connections and embeds in concrete where they occur.

C. Manufacturers' installation instruction and recommendations.

1.6 PRODUCT HANDLING

A. All necessary precautions shall be taken to protect all handrails, guardrails, and components from damage or discoloration. Pack and ship in individual plastic film to protect the anodized finish.

B. Store handrails and guardrails above ground on platforms or other supports to prevent damage.

PART 2 MATERIALS

2.1 ALUMINUM PIPE HANDRAIL AND GUARDRAIL

A. Rails, Posts, and Fitting-assembly Spacers:

1. ASTM B429, 6005-T5, minimum Schedule 40, extruded aluminum pipe of minimum 1.89 inch outside diameter and 0.14-inch wall thickness.

2. Alloy 6063-T6 may be used for pieces requiring bending only.

B. Kick Plates: 6005-T5 aluminum alloy.

C. Fastenings and Fasteners: As recommended or furnished by the manufacturer.

D. Other Parts: 6063 extruded aluminum, or F214 or F514.0 aluminum castings.

1. Fabrications: ASTM B209 or ASTM B221 extruded bars.
2. Bases: 6061 or 6063 extruded aluminum alloy.
3. Plug Screws or Blind Rivets: Type 305 stainless steel.
4. Other Parts: Type 300 series stainless steel.

E. Finish of Aluminum Components:

1. Anodized finish, 0.7 mil thick, applied to exposed surfaces after cutting. Aluminum Association Specification M32-C22-A41, mechanical finish-medium satin (wheel or belt polish with aluminum oxide grit size of 180 to 220 size, at speed 6000 fpm, parallel to length of railing), chemical finish-medium matte, anodic coating-clear Class I Architectural.
2. Pretreat aluminum for cleaning and removing markings before anodizing.

F. Fabrication and Assembly:

1. Fabricate posts in single, unspliced pipe length.
2. Perform without welding.
3. Do not epoxy bond the parts.
4. Maximum clear opening between assembled railing components as indicated on the Drawings.

G. Manufacturers: One of the following or equal:

1. Moultrie Manufacturing Company, Wesrail.
2. Julius Blum and Company, Inc., Connectorail.
3. Craneveyor Corporation Enerco Metals, C-V Rail.

H. Grout Pockets

1. Existing concrete – As indicated on the Drawings.
2. New concrete – As indicated on the Drawings.
3. Grout - Quick setting hydraulic cement, CraneVeyor No. C5804; Hallemite Manufacturing Company, "Por-Rok", or equal.

I. Gates shall have an all welded pipe frame, aluminum hinges and gate stop. Hinge pins and latch bolt to be Type 300 series stainless steel. Gates shall be self-closing and self-latching.

J. Toe Boards shall be aluminum channel, as indicated on the Drawings.

K. Safety Chains shall be wrought aluminum hand chain, 17/64 inch diameter, non-welded, attached to posts with stainless steel eye bolts, ¼-inch - 20 x 1¾ inches with ½-inch inside diameter and 7/8 inch thread. Chain snaps shall be ½-inch nickel plated bronze harness snaps.

L. Removable Railing: For locations shown on the drawings, provide removable railing system with wall/face mounting brackets using single post face mounts (for receiving end rail) and double post receivers (for intermediate in-line railing runs). Other than kickplates, provide all other items (guardrails, round sections, height, materials, etc) specified above for removable railing systems.

PART 3 EXECUTION

3.1 FIELD MEASUREMENTS

Before fabrication or installation, verify the dimensions of all areas, spans, spaces, and configurations.

3.2 WORKMANSHIP

All fabrication shall be done to the dimensions shown or approved. All items shall be free from any defects which mar appearance or impair strength.

3.3 FABRICATION

A. All fabrication in this section shall be done by persons skilled in the required trade. Fastenings and connections shall impart no stresses or distortion on any members, and allowance for expansion and contraction shall be made where necessary.

B. Assembly of components shall be performed in strict accordance with manufacturers' recommendations for assembly.

C. Carbide tipped circular saw blades with approximately four teeth per inch plus chip gap is recommended. Cuts must be free of burrs, nicks, and sharp edges. De-burr with care; do not chamfer edges of cuts.

D. Posts shall be continuous from mounting surface to top rail. The posts shall be evenly spaced at not less than 4 feet or more than 6 feet on centers. Field conditions may require some adjustment of spacing.

E. Bottom and intermediate rails shall be un-spliced lengths between posts.

F. Top rails shall be continuous at corners.

G. Each top rail shall be attached whenever possible, to a minimum of three posts.

H. Top rail splices and expansion joints must be located within 8 inches of post or other support. Fasten only one side of pipe to splice sleeve when used as expansion joint. Sleeve must be free to move in unfastened railing. For protection from temperature induced stresses, an expansion joint and gap must be provided in every top rail on a maximum of 18 feet. Top rails only must have expansion joints between the fixed points. Use 1/8 inch gap between bottom and intermediate rails and each fitting.

Expansion Joint Gap Table

Temperature (°F) Time of Installation	Gap Dimension each Expansion Joint(On 18'-0" Centers)
-20 to 0	½"
0 to +20	7/16"
20 to 35	3/8"
35 to 50	5/16"
50 to 70	¼"
70 to 90	3/16"
90 to 120	1/8"

Note: An upper design temperature of 120°F is used for this chart. Where it is known that other temperature maximums will be experienced, a more accurate gap dimension can be calculated by this formula:

Gap Each Joint in Inches = 0.000013 x (temperature difference from maximum to installation temperature) x (number of inches between expansion joints).

I. Top of upper railing shall be 42 inches above the working surface. Toeboards shall be installed not more than ¼-inch off the working surface and shall be provided where specified or required by code, and as shown on the drawings.

J. For all exterior installations, provision must be made to drain water from the railing system to prevent damage caused by freezing of entrapped water. Likewise, for interior installations subject to high humidity, provision must be made to drain off water from the railing system. Pre-drill 15/64" diameter weep holes in all posts set in concrete or otherwise closed at bottom, and in bends and elbows at low points.

3.4 DISSIMILAR MATERIALS

A. All surfaces of railing components in contact with concrete and other materials and permanently exposed to moisture shall be painted with a coating of asphaltic paint to prevent contact between the two surfaces. All railing components shall be installed so that no drainage over them has previously been contaminated from copper, caustics or alkalies.

B. Where protection is applied for prevention of dissimilar materials electrolysis, care should be taken that none of the protective materials is visible when assembly is completed.

3.5 PROTECTION

Protect the railing component finish from scratches, gouges, nicks, dents, etc. during storage, assembly and installation. Insofar as possible, the plastic film shall be left intact on the pipe until inspection and acceptance.

END OF SECTION

SECTION 05530

GRATINGS, STAIR TREADS, AND FLOOR PLATES

PART 1 GENERAL

1.1 DESCRIPTION

The work of this section consists of furnishing and installing gratings, stair treads and floor plates.

1.2 RELATED WORK SPECIFIED ELSEWHERE

A. Section 01300 - Submittals

B. Section 03100 - Concrete

C. Section 05120 - Structural Steel

D. Section 05500 - Metal Fabrications

1.3 QUALITY ASSURANCE

Standards:

A. AA - Aluminum Association

B. AISC - American Institute of Steel Construction

C. ASTM - American Society for Testing and Materials

D. AWS - American Welding Society

E. NAAMM - National Association of Architectural Metal Manufacturers

1.4 SUBMITTALS

A. In accordance with Section 01300.

B. Submit shop drawings prior to fabrication. Include information necessary for fabrication and erection of component parts and arrangement of gratings, frames, stair treads and floor plates. Indicate size and weight of members, type and location of shop and field connections, type, size and extent of all welds and welding sequence. Use AWS welding symbols. Approval of shop drawings will be for size and arrangement of principal and auxiliary members and strength of connections. Any errors in dimensions and quantities shown will be the responsibility of the Contractor.

C. Certificate: Furnish manufacturer's certificate that grating materials meet or exceed the requirements of this specification.

1.5 HANDLING AND STORING MATERIALS

Material to be stored shall be placed on skids above the ground. It shall be kept clean and properly drained. To avoid delays, deliver timely all loose items to be built into the concrete.

PART 2 MATERIALS

2.1 ALUMINUM GRATING

A. Open Mesh Grating (Type A)

1. Swage locked rectangular design (spaced approximately 1-3/16 x 4-inches on center).

2. Main bars to be 3/16-inches thick, depth as indicated in the Schedule in Part 3.02A1 of these Specifications or as indicated on the Drawings. Cross bars shall be secured to the main bars by a swaging process to prevent turning, twisting or coming loose.

3. Banding strips of the same thickness and ¼ -inch less depth as main bars shall be welded to each main bar at ends of grating sections and at openings.

4. Grating shall be IKG Borden swaged lock type "BS", 31266 Avenue 12, Madera, CA 93639; Seidelhuber No. 19S4, or equal.

B. Unpunched Plank (Type B)

1. Anti-skid surface, continuous raised longitudinal ridges.

2. Integral I-beam ribs with welded banding strips at ends of grating sections and at openings.

3. Each panel shall be provided with a recessed handle for removal.

4. For grating size, see Schedule in Part 3.02A2 of these Specifications, or as indicated on the Drawings.

5. As manufactured by IKG Borden; Seidelhuber, or equal.

2.2 GALVANIZED STEEL (OPEN MESH) GRATING (TYPE C)

A. Weldforged rectangular design (spaced approximately 1-3/16 x 4-inches on center).

B. Main bars to be 3/16-inches thick, depth as indicated in the Schedule in Part 3.02A3 of these Specifications, or as indicated on the Drawings. Cross bars to be twisted square steel and resistance welded at right angles to the main bars. No notching or cutting of bearing bars before welding is permissible.

C. Banding strips of the same depth and thickness as main bars shall be welded to each main bar at ends of grating sections and at openings.

D. Grating shall be IKG Borden, weldforged type "WB", 31266 Avenue 12, Madera, CA 94623; Seidelhuber No. 19W4, or equal.

2.3 STAINLESS STEEL (OPEN MESH) GRATING (TYPE E)

A. Weld forged rectangular design (spaced approximately 1-3/16 x 4-inches on center).

B. Main bars to be 3/16-inches thick, depth as indicated in the schedule in Part 3.02.A.3 of these specifications or as indicated on the Drawings.

C. Banding strips of the same depth and thickness as main bars shall be welded to each main bar at ends of grating sections and at openings.

D. Grating shall be 1KG Borden, weld forged type stainless type 316 “WB”, 31266 Avenue 12, Madera, CA 94623 or equal.

E. Furnish with a clean welded stainless appearance by electropolish, chemical cleaning or beadblast the finished product as needed.

2.4 GRATING FRAMES

Type 304 Stainless Steel or Fiberglass in areas exposed to chemicals and corrosive materials.

A. Embedded by welding continuous vertical bar same height as grating, to edge of 2-inch horizontal leg of 2-inch x 1½-inch structural angle, thereby providing 1-5/8-inch wide

bearing area. Thickness of frame shall be ¼ -inch minimum. Provide welded-on anchors at 18-inch centers, minimum two per side, as detailed on the Drawings. 1½ -inch vertical leg of frame below grating shall have a 5/16-inch diameter hole 24-inches on center for temporary nailing to formwork.

B. Surface Mounted Frame shall be a 2½ x 2 x ¼ -inch structural angle. Frame shall be attached as shown on the Drawings with a 5/8-inch diameter Type 304 stainless steel bolts at 15-inch centers maximum, minimum two per side.

2.5 STAIR TREADS

A. Aluminum construction, 0.065-inch thick "I-bar" webs with ¼-inch wide grooved top and bottom flanges. Cross bars shall be secured to main bars by a swaging process to prevent turning, twisting, or coming loose. Main bearing bar size shall be 1½ x 3/16-inch "I-bar" for tread lengths up to 42-inches.

B. Nosing shall be extruded corrugated aluminum, 1¼-inches wide.

C. Carrier bar shall be 3 x 3/16-inch aluminum full width of tread with one round and one slotted 7/16 -inch opening for bolts. Bolts shall be 3/8-inch diameter, galvanized steel for dry locations, stainless steel for moist locations.

D. Irving Borden type "IB" Bar, Seidelhuber type 19SI4, or equal.

2.6 SAFETY NOSING FOR CONCRETE STAIRS

A. Cast aluminum with cross-hatched and non-slip abrasive surfaces, or IKG Borden MEBAC aluminum nosings.

B. Cast aluminum exposed wearing surface to contain not less than 2 oz. per square foot of abrasive granules embedded in the top metal surface not less than 1/16" while the matrix is in a molten state. Size of non-slip granules shall range from No. 16 to No. 24.

C. Nosing shall be 4-inches wide and 5/16-inches thick minimum, with ¼-inch diameter by 1-inch long cast-on bolt anchors. Length shall be as required to terminate not more than 4-inches from each end of treads and as indicated for platforms and landings. Nosing shall be flush with the top of the traffic surfaces.

D. IKG Borden MEBAC aluminum type C-4E; American Abrasive Metals Co. "Alumalun" Style A; Wooster Products Inc. "Alumogrit" Type 101, or equal.

2.7 CHECKER PLATES

A. Aluminum diamond tread, 6061-T4 or T6 alloy. Raised pattern on one-inch centers.

B. Galvanized steel angle frame as detailed on Drawings.

C. Checker plates as manufactured by Ryerson, Emeryville, CA 94608; Aluminum Co. of America, Pittsburgh, PA 15219, or equal.

PART 3 EXECUTION

3.1 FIELD MEASUREMENTS

Before fabrication or installation, verify all dimensions of areas, spaces, spans and configurations. Provide openings for passage of pipes or other penetrations.

3.2 GRATING INSTALLATION

A. Grating sizing (Unless otherwise called out on the drawings)

1. Open Mesh Aluminum Grating (Type A)

Span	Bearing Bar Size	Wt. Lbs. Sq. Ft.
2'-6" and less	1" x 3/16"	2.6
3'-0" to 3'-6"	1¼" x 3/16"	3.2
Over 3'-6" to 4'-0"	1½" x 3/16"	3.9
Over 4'-0" to 4'-6"	1¾" x 3/16"	4.5
Over 4'-6" to 5'-0"	2" x 3/16"	5.1

2. Unpunched Aluminum Plank (Type B)

Span	Bearing Bar Size	Wt. Lbs. Sq. Ft.
2'-6" and less	1"	2.65
3'-0" to 3'-6"	1¼"	3.25
Over 3'-6" to 4'-0"	1½"	3.95
Over 4'-0 to 4'-6"	1¾"	4.55
Over 4'-6" to 5'-0"	2"	5.55
Over 5'-0" to 5'-6"	2¼"	6.25

3. Open Mesh Galvanized Steel Grating (Type C)

Span	Bearing Bar Size	Wt. Lbs. Sq. Ft.
2'-6" and less	¾" x 3/16"	5.8
3'-0" to 3'-6"	1" x 3/16"	7.5
Over 3'-6" to 4'-6"	1¼" x 3/16"	9.1
Over 4'-6" to 5'-6"	1½" x 3/16"	10.8
Over 5'-6" to 6'-0"	1¾" x 3/16"	12.5

B. Grating Sections:

1. Overall physical size of grating sections may be shown or indicated on Drawings where ease of removing an individual section has been considered. Otherwise, if not indicated on Drawings specifically, size of sections shall be such that no panel weighs more than 60 pounds.

2. Provide ¼-inch space between grating sections and frame and adjacent grating sections. Edge of grating at openings shall be banded with same size bar as bearing bar.

C. Grating Fasteners:

1. Open mesh grating.

   a. Secure each grating section to frame with stainless steel saddle clips and stainless steel self-drilling fasteners; at least four per grating section. Saddle clips shall be placed over two main bearing bars.

   b. Use galvanized saddle clips for galvanized steel grating, aluminum saddle clips for aluminum grating, Type 316 stainless steel saddle clips for stainless and fiberglass grating.

2. Plank grating.

   a. As detailed on Drawings or as recommended by Manufacturer.

D. Grating Frames and Supports

1. All gratings shall be set into angle frames set and anchored into the concrete, supported by surface mounted frames, or as detailed on the Drawings.

2. The top surfaces of all bars and panels of gratings shall be flush with the adjacent surfacings, around perimeter of grating sections and at openings.

3. Provide supports for gratings at openings as detailed on the Drawings. If detailing on the drawings is not shown contractor shall design and provide support beams for gratings at openings as needed at no cost to the Owner. If additional support beams are needed due to geometrical constraints, they are designed and provided at no cost to the Owner.

4. Use galvanized steel frames for steel gratings, aluminum frames for aluminum gratings, type 304 stainless steel frames for fiberglass gratings and Type 304 stainless steel frame for stainless steel gratings.

3.3 WORKMANSHIP

A. All fabrication shall be done to the dimensions shown or as approved. All items shall be free from any defects which mar appearance or impair strength.

B. All panels shall be absolutely flat and true to provide even, uniform, non-rattling bearing on the supports. Supports for all grating shall be provided as shown on the Drawings.

END OF SECTION

SECTION 05570

METAL SUPPORT FRAMING

PART 1 GENERAL

1.1 DESCRIPTION

The work of this section consists of furnishing and installing metal support framing for piping and other equipment as shown on the drawings.

1.2 RELATED WORK SPECIFIED ELSEWHERE

A. Section 01300 - Submittals

B. Section 01610 - Seismic Design Criteria

C. Section 01615 - Wind Design Criteria

D. Section 05500 - Metal Fabrications

E. Section 15094 - Hangers and Supports

F. Division 16 - Electrical

1.3 QUALITY ASSURANCE

Standards

A. AA - Aluminum Association

B. AISC - American Institute of Steel Construction

C. ASTM - American Society for Testing and Materials

D. AWS - American Welding Society

1.4 SUBMITTALS

A. In accordance with Section 01300.

B. Provide structural calculation stamped and signed by a Structural or Civil engineer registered in the state of California for the metal support framing system. See specs 01610 and 01615 for additional information.

C. Submit shop drawings prior to fabrication. Include information necessary for fabrication and erection of component parts and arrangement of frames. Indicate size and weight of members; type and location of shop connections. Approval of shop drawings will be for size and arrangement of principal and auxiliary members and strength of members. Any errors in dimensions and quantities shown will be the responsibility of the Contractor.

D. Certificate: Furnish manufacturer's certificate that framing materials meet or exceed the requirements of this specification.

1.5 HANDLING AND STORAGE OF MATERIALS

Materials to be stored shall be placed on skids above the ground. It shall be kept clean and properly drained. To avoid delays, deliver all loose items to be built into the concrete in a timely fashion.

PART 2 MATERIALS

2.1 GENERAL

A. All parts shall be manufactured by Unistrut Corporation, Wayne, Michigan; B-Line Systems, Inc., Highland, Illinois, or equal.

B. All parts of the system shall be of one manufacturer. Parts shall be stamped with manufacturer's part number for identification.

C. The load capacities of parts, connections and assemblies shall meet or exceed those published in the latest framing manufacturer's engineering catalog and supplementary bulletins.

D. Dimensions, tolerances and physical design shall be so that the parts within the system will be interchangeable and conform to the designs set forth in the latest framing manufacturer's engineering catalog and supplementary bulletins.

E. Channels, continuous concrete inserts, and closure strips shall be 12-gauge, cold-formed from mild steel conforming to ASTM A1011, Grade C specifications.

F. Fittings shall be press formed from hot rolled, pickled and oiled steel plate conforming to ASTM A575 or steel strip conforming to ASTM A1011 Grade C specifications.

G. Gripping nuts shall be stainless steel spring mounted with serrated nuts.

H. Screws and bolts shall be stainless steel. All threads shall be Unified National Coarse, Class A.

I. Unless noted otherwise, framing channels shall be galvanized.

J. Use stainless steel or fiberglass materials in wet or corrosive areas, or as shown on the drawings.

PART 3 EXECUTION

3.1 GENERAL

See Contract Drawings for configuration and member model numbers (if shown). Supply all components to result in a complete system, whether shown, specified or not. The minimum design basis shall be Unistrut model P1000, or equal.

3.2 FIELD MEASUREMENTS

Before installation, verify all dimensions of areas, spaces, spans and configurations.

3.3 INSTALLATION

A. All frameworks and assemblies of the system shall be true, plumb, square and level and accurately located according to the Contract and Shop Drawings.

B. Cut ends of fiberglass channels shall be sealed per manufacturer's recommendations.

C. All installations shall be coordinated with other trades as required.

D. All bolted connections shall be tightened to the following torque values.

1. ¼-inch bolts 4 foot-pounds torque
2. 3/8-inch bolts 30 foot-pounds torque
3. ½-inch bolts 50 foot-pounds torque

3.4 WORKMANSHIP

All fabrication shall be done to the dimensions shown or as approved. All items shall be free from any defects which mar appearance or impair strength.

END OF SECTION

SECTION 09900

PAINTING AND FINISH SCHEDULE

PART 1 GENERAL

1.1 DESCRIPTION

The work of this section consists of furnishing and applying paint for architectural, structural, mechanical and miscellaneous work.

The work comprises the painting of all exposed surfaces of concrete, sheet metal, iron and steel, process equipment, electrical equipment, process piping ducts and other miscellaneous items.

1.2 RELATED WORK SPECIFIED ELSEWHERE

A. Section 01300: Submittals

B. Section 02601: Manholes and Cleanouts

C. Section 05500: Metal Fabrication

D. Section 07100: Waterproofing

E. Section 10400: Identifying Devices

1.3 SUBMITTALS

A materials list and samples shall be submitted as required by Section 01300 and as follows:

A. Materials list naming each product to be used identified by manufacturer and type number.

B. Volatile organic compound (VOC) level (gm/l) and manufacturer's certification of compliance with applicable air quality limits for each coating.

C. Manufacturer's application recommendations for each product submitted.

D. The Contractor shall submit a current chart of the Manufacturer's available colors for selection by the Engineer, forty five (45) days prior to the start of coating and painting.

Samples, when reviewed and accepted by the Engineer, shall establish the quality of the painted surface where these applications are indicated.

1.4 DEFINITION

The term "paint" as used herein includes enamels, paints, sealers, emulsions and other coatings used as prime intermediate or finish coats for protection or decoration.

1.5 COMPLIANCE WITH VOLATILE ORGANIC COMPOUND (VOC) LIMITS

All paint and coating products shall comply with the applicable limits on volatile organic compounds (VOC) as established by the United States Environmental Protection Agency and by State and local air quality regulating agencies. It shall be the Contractor's responsibility to verify compliance of all paints and coatings. In the event that any paint or coating listed herein is found to be non-compliant, the Contractor shall notify the Engineer and the Engineer will select a substitute coating or paint.

1.6 QUALITY ASSURANCE

A. General: Quality assurance procedures and practices shall be utilized to monitor all phases of surface preparation, application and inspection throughout the duration of the project. Procedures or practices not specifically defined herein may be utilized provided they meet recognized and accepted professional standards and are approved by the Engineer.

B. Workmen: Use adequate numbers of skilled workmen who are thoroughly trained and experienced in the necessary crafts and who are completely familiar with the specified requirements and the methods needed for proper performance of the work of this Section.

C. Paint Coordination:

1. Review other Sections of these Specifications as required, verifying the prime coats to be used and assuring compatibility of the total coating system for the various substrata.

2. Upon request, furnish information on the characteristics of the specific finish materials to assure that compatible prime coats are used.

3. Provide barrier coats over non-compatible primers, or remove the primer and re-prime as required.

4. Notify the Engineer in writing of anticipated problems in using the specified coating systems over prime-coatings supplied under other Sections.

1.7 DELIVERY AND STORAGE

A. All materials shall be brought to the job site in original sealed containers. Each container shall bear the manufacturer's name, coating type, batch number, date of manufacture, storage life, and special directions. They shall not be used until the Engineer has inspected contents and obtained data from information on containers or label. Materials exceeding storage life recommended by the manufacturer shall be rejected.

B. All coatings and paints shall be stored in enclosed structures to protect them from weather and excessive heat or cold. Flammable coatings or paints must be stored to conform to City, County, State and Federal safety codes for flammable coatings or paint materials. At all times coatings or paints shall be protected from freezing.

1.8 REFERENCED SPECIFICATIONS AND STANDARDS

A. Without limiting the general aspects of other requirements of these specifications, all surface preparation, coating and painting of surfaces shall conform to the applicable requirements of the National Association of Corrosion Engineers, the Society for Protective Coatings, the American Concrete Institute, the Forest Products Research Society and the Manufacturer's printed instructions.

B. The Engineer's decision shall be final as to interpretation and/or conflict between any on the reference specifications and standards contained herein.

1.9 AS COATED SUMMARY SHEET

Contractor shall supply a list of all coating products used on the Project, including the exact stock number and the file numbers for the color tints added and amounts for each. The Summary Sheet should also list the local paint supply location for the particular brand of coating including the Name, address, phone number, and website for each product.

PART 2 MATERIALS

2.1 PAINT AND FINISH PRODUCTS

A. Paint and coating products shall be fresh and well ground; shall not settle readily, cake, or thicken in the container; shall be broken up readily with paddle to a smooth consistency; and shall have easy application properties. Other painting materials such as linseed oil, turpentine, mineral spirits, miscellaneous thinners, varnish, and shellac shall be of the highest quality.

B. All paints and coatings shall be specifically manufactured for use on projects of this type, and shall be used on surfaces intended by the paint manufacturer. Paints and coatings shall be Tnemec, Carboline or equal. All paint and coatings shall be delivered in original containers, with seals unbroken.

C. To establish a standard of quality, several specific paint and coating products are listed in the coating System Index under 2.5, this section.

2.2 COMPATIBILITY OF SHOP AND FIELD PAINTS

To ensure a satisfactory painting job it is essential that the paints applied in the shop and in the field be mutually compatible. Where prime coats are shop applied, the Contractor shall instruct suppliers to provide compatible primers with the finish coats selected by the Contractor. In no case will primers be allowed that are not manufactured by the suppliers of the finish coats unless approved by the Engineer.

2.3 COLORS

A. Color for the various surfaces to be painted shall be selected by the Engineer. Use of different colors for the various structures or for surfaces of a single structure may be directed by the Engineer.

B. Piping, ductwork and adjacent equipment colors shall be as specified in Section 10400, identifying devices.

C. Equipment/Piping colors shall be as scheduled below:

1. All exposed equipment and piping coated, as defined below, shall be tan for all process fluids, brown for all sludge lines, and blue for all potable water.

2. Provide color chart for engineers approval.

2.4 SYSTEMS INDEX

A. System A

1. Type of Coating: Polymidoamine or Amine Cured Epoxy
2. Surface: Ferrous metals and concrete submerged or subject to submersion in non-potable water.
3. Surface Preparation: Ferrous Metals: SSPC-SP-10 Concrete: SSPC-SP-13.
4. Coatings and Dry Film Thickness (DFT):

Minimum No. of Coats	DFT per Coat	Tnemec Series	Carboline
1	4.0 to 5.0 mils	66HS-1211 Red	Carboguard 890
2	6.0 mils	66HS	Carboguard 890

B. System B

1. Type of Coating: Protective Coal Tar
2. Surface: Buried ferrous metals and Concrete
3. Surface Preparation: Steel - SSPC-SP6; Concrete - SSPC-SP-13
4. Coatings and Dry Film Thickness (DFT):

Minimum No. of Coats	DFT per Coat	Tnemec Series	Carboline
2	10.0 mils	46H-413	Bitumastic 300M

C. System C

1. Type of Coating: 100% Solids Epoxy (Hydropox or Plasite 4500S - See Section 02601)
2. Surface: Concrete
3. Surface Preparation: SSPC-SP-7 (for new concrete) or SSPC-SP-13 (for existing modified structures)
4. Epoxy lining shall be manufactured by Carboline and consist of a base coat, prime and finish coat. The prime coat shall be a two component, low viscosity 100% solids, deep penetrating primer. The prime coat shall be designed for use on properly prepared porous substrates, such as concrete. The finish coat shall be a non-polluting, solvent free, two-component, 100% solids epoxy system designed as a chemical coating barrier against potable water, salt water, and raw wastewater. The finish coat shall cure at a low minimum temperature of 40°F, have a potlife of 35 minutes at room temperature, be tack free in 4 hours and cured in 3 days.

a. Base coat (at 150 square feet per gallon), Carboguard 510

b. Prime coat (DFT = 5 miles), Carboline 691

c. Finish coat (DFT = 80 mils), Carboline Plasite 4500S

5. Concrete curing compound is not allowed as specified in Section 03100. Forms shall remain for a minimum of 7 days or more depending on ambient temperatures as approved by the Engineer.

6. A wet cure method for a minimum of 7 days may also be allowed as approved by the Engineer.

7. Coating shall be applied during periods of stable to declining temperatures to minimize pin-holing.

8. If sacking and brush blast is required prior to the prime coat, only a grout consisting of sand and cement is allowed. Additives that may produce a surface film compromising adhesion are prohibited.

D. System D

1. Type of Coating: Polyamidoamine or Amine Cured Epoxy, Polyurethane

2. Surface: Exterior, non-submerged metals and plastic piping, mild or severe chemical or corrosion exposure.

3. Surface Preparation: Ferrous metals: SSPC-SP-6

4. Plastic Piping and Non-Ferrous Metals: SSPC-SP-1

5. Galvanized Metal: SSPC-SP-7 (Take care not to remove Galvanized Coating)

6. Coatings and Dry Film Thickness (DFT):

Minimum No. of Coats	DFT per Coat	Tnemec Series	Carboline
2	5.0 mils (metals) 3.0 mils (plastics)	66HS	Carboguard 890
1	4.0 mils(metals) 3.0 mils(plastics)	1074 or 1075	Carbothane 134VOC

E. System N: Emulsified Asphalt Coating (See Section 07100).

F. System O

1. Type of Coating: Aromatic elastomeric polyurethane, or epoxy.

2. Surface: Submerged ferrous metals subject to abrasion.

3. Surface Preparation: SSPC-SP-10

4. Coatings and Dry Film Thickness (DFT):

Minimum No. of Coats	DFT per Coat	Tnemec Series	Carboline
1	4.0 to 5.0 mils	66HS -1211	N/A
2	8.0 to 12.0 mils	164	Reactamine 760

G. System P

1. Type of Coating: Polyamide Epoxy / Acrylic
2. Surface: Exterior of steel structures and tanks previously coated with alkyd enamel.
3. Surface Preparation: All surfaces damaged by construction SSPC-SP-6; all other surfaces SSPC-SP-7.
4. Coatings and Dry Film Thickness (DFT):

Minimum No. of Coats	DFT per Coat	Tnemec Series	Carboline
1	4.0 to 6.0 mils	66HS	Rustbond
1	2.5 to 3.0 mils	30	Carbocrylic 3359DTM

H. System AA

1. Type of Coating: Polyamidoamine Epoxy
2. Surface: Ductile Iron Pipe (as defined in specification section 15062).
3. Surface Preparation: as defined in specification section 15062
4. Coatings and Dry Film Thickness (DFT) (see Section 15062)

PART 3 EXECUTION

3.1 GENERAL

A. During scheduled coating periods, daily whether reporting is required (including, but not limited to, air and surface temperature, dew point, relative humidity, rain, snow, mist, fog, and wind. Further, daily report shall include conditions that have the potential to cause dust, insects, or debris adhere to coating.) Contractor is required to obtain preauthorization from Owner's representative and Engineer prior to coating and painting; authorization shall be whether dependant. At all times, Contractor shall comply with paint manufacturer's published recommendation for environmental conditions in which paint materials can be applied and as approved by the Engineer. Additionally, see section 3.5.

B. All surface preparation, coating and painting shall conform to applicable standards of the National Association of Corrosion Engineers, the Steel Structures Painting Council, the

American Concrete Institute, the Forest Products Research Society and the Manufacturer's printed instructions. Material applied prior to approval of surface by the Engineer shall be removed and re-applied to the satisfaction of the Engineer at the expense of the Contractor.

C. All work shall be performed by skilled craftsmen qualified to perform the required work in a manner comparable with the best standards of practice.

D. The Contractor shall provide a supervisor at the work site during cleaning and application operations. The supervisor shall have the authority to sign any change orders, coordinate work and make decisions pertaining to the fulfillment of the contract.

E. Dust, dirt, oil, grease or any foreign matter that will affect the adhesion or durability of the finish must be removed by washing with clean rags dipped in an approved cleaning solvent and wiped dry with clean rags.

F. Coatings and painting systems include surface preparation, prime coating and finish coatings. Unless otherwise specified, prime coatings shall be field applied. Where prime coatings are shop applied, the Contractor shall instruct suppliers to provide the prime coat compatible with the finish coat specified. Any off-site work which does not conform to the specification is subject to rejection by the Engineer.

Shop applied prime coatings which are damaged during transportation, construction or installation shall be thoroughly cleaned and touched up in the field as directed by the Engineer. The Contractor shall use repair procedures which insure the complete protection of all adjacent primer.

The specified repair method and equipment may include wire-brushing, hand or power tool cleaning or dry air blast cleaning. In order to prevent injury to surrounding painted areas blast cleaning may require use of lower air pressure, smaller nozzle and abrasive particle sizes, short blast nozzle distance from surface, shielding and masking. If damage is too extensive, the item shall be re-cleaned and coated or painted as directed by the Engineer.

G. Previously painted surfaces: Repair surface defects. Remove grease, oil and other contaminants as specified for steel surfaces. Scrape carefully to remove deteriorated coatings. Glossy or very hard coatings should be sanded lightly to promote maximum adhesion of the subsequent coating. Surface must be thoroughly dry before coating.

H. The Contractor's coating and painting equipment shall be designed for application of materials and shall be maintained in first class working condition. Compressors shall have suitable traps and filters to remove water and oils from the air. Contractor's equipment shall be subject to approval by the Engineer.

I. Application of the first coat shall follow immediately after surface preparation and cleaning and within an eight hour working day. Any cleaned areas not receiving first coat within eight-hour period shall be re-cleaned prior to application of first coat. This may include re-blasting.

J. Prior to assembly, all surfaces made inaccessible after assembly shall be prepared as specified herein and shall receive the coating or paint system specified.

K. For existing structures, prior to surface preparation and coating, Contractor shall remove all existing pipes, pipe supports, equipment, guide brackets, anchors, gate frames, hatches, grating and appurtenances mounted to the structure (see Contract Drawings for existing infrastructure).

1. After coating services, Contractor shall re-install all removed equipment, piping, supports, guide brackets, anchors, gates, hatches, grating, and appurtenances.

3.2 SURFACE PREPARATION, METALLIC SURFACES

A. Surface preparation will be based on comparison with: ASTM D2200 "Pictorial Surface Preparation Standards for Painting Steel Surfaces", SSPC-Vis 1,: ASTM D610 "Standard Methods of Evaluating Degree of Rusting on Painted Steel Surfaces", SSPC-Vis 2,; and as described below. Anchor profile for prepared surfaces shall be measured by use of a non-destructive instrument such as a Keane-Tator Surface Profile Comparator or Testex Press-O-Film System.

To facilitate inspection the Contractor shall, on the first day of abrasive blast cleaning operations, blast clean metal panels to the standard specified. These panels shall be equivalent to the supplied plate stock which is to be coated or painted and shall have minimum measurements of 8-½-inches by 11-inches. After agreeing a specific panel meets the requirements of the specification, it shall be initialed by the Contractor and Engineer and coated with a clear non-changing finish. Panels shall be utilized for inspection purposes throughout the duration of blast cleaning operations.

B. Heavy deposits of grease or oil shall be removed with solvent oil cleaner and any chemical contamination shall be neutralized and/or flushed off prior to any other surface preparation.

C. Surfaces scheduled for Near White or Commercial Blast Cleaning shall have all welds, edges, and sharp corners ground to a 1/16-inch radius and all weld splatter removed, and sandblasted in accordance with Steel Structures Painting Council Specifications, removing mill scale, rust, dirt, paint, or other foreign matter, and shall be slightly roughened to form a suitable anchor pattern for the coating application. Do not leave blasted surfaces overnight before coating. Remove all sand from the surface by brush or industrial vacuum.

D. All other steel not scheduled for blast cleaning shall have all weld splatter removed, and rough edges and rough welds ground, and shall be cleaned by means of hand or power tools, in accordance with Steel Structures Painting Council Specification No. 2 or No. 3, removing all loose mill scale rust, dirt, paint, or other contaminants. Blast cleaning may be used if practical. The remaining mill scale, rust, and paint must be sufficiently abraded to provide for good bonding of the coating.

E. Field blast cleaning for all surfaces shall be dry method unless otherwise directed.

F. Particle size of abrasives used in blast cleaning shall be that which will produce a 2 mil (50.0 microns) surface profile or in accordance with recommendations of the manufacturer of the specified coating or paint system to be applied.

G. Abrasive used in blast cleaning operations shall be new, washed, graded and free of contaminants that would interfere with adhesion of coating or paint and shall not be reused unless specifically approved by the Engineer.

H. During blast cleaning operations, caution shall be exercised to insure that existing coatings or paints are not exposed to abrasion from blast cleaning.

I. The Contractor shall keep the area of his work in a clean condition and shall not permit blasting materials to accumulate as to constitute a nuisance or hazard to performance of work or operation of existing facilities.

J. Blast cleaned surfaces shall be cleaned prior to application of specified coatings or paints by a combination of blowing with clean dry air, brushing/brooming and/or vacuuming as directed by the Engineer.

K. All welds shall be cleaned with a suitable chemical compatible with the specified coating materials.

L. Specific Surface Preparation: Surface preparation for the specific system shall be as designated in the Systems Index, Part 2.05 of these specifications.

M. Application SSPC specifications are as follows:

1. Solvent Cleaning (SSPC-SP1): Removal of oil, grease, soil and other contaminants by use of solvents, emulsions, cleaning compounds, steam cleaning or similar materials and methods which involve a solvent or cleaning action.

2. Hand Tool Cleaning (SSPC-SP2): Removal of loose rust, loose mill scale and other detrimental foreign matter to degree specified by hand chipping, scraping, sanding, and wire-brushing.

3. Power Tool Cleaning (SSPC-SP3): Removal of loose rust, loose mill scale and other detrimental foreign matter to degree specified by power wire-brushing, power impact tools or power sanders.

4. White Metal Blast Cleaning (SSPC-SP5): Blast cleaning to a gray-white uniform metallic color until each element of surface is free of all visible residues.

5. Commercial Blast Cleaning (SSPC-SP6): Blast cleaning until at least two-thirds of each element of surface area is free of all visible residues.

6. Brush-Off Blast Cleaning (SSPC-SP7): Blast cleaning to remove loose rust, loose mill scale and other detrimental foreign matter to degree specified.

7. Near White Blast Cleaning (SSPC-SP10): Blast cleaning to nearly white metal cleanliness, until at least 95 percent of each element of surface area is free of all visible residues.

3.3 SURFACE PREPARATION, CONCRETE AND MASONRY

A. Concrete and masonry shall cure at least 28 days and have a moisture content prior to coating or painting below 8 percent as measured by an instrument such as a Delmhorst Model DP, unless recommended otherwise by the paint manufacturer.

B. All surfaces shall be thoroughly cleaned by abrasive blasting, wire-brushing or other approved methods, removing all traces of foreign materials. Remove all loose concrete and masonry by chipping or other approved methods to leave only a sound, firmly bonded substrate. Cracks and voids shall be repaired or filled as directed by the Engineer with approved suitable materials, mixed and applied in strict accordance with the Manufacturer's printed instructions. In general, final surface shall be smooth and free of voids, cavities, dirt, dust, oils, grease, or other contaminants.

C. Where oil or grease deposits are present, prior to above surface preparation, clean surfaces by scrubbing with a solution of one and one-half ounces (44.4 ml) tri-sodium phosphate (TSP) and one and one-half ounces (44.4 ml) of non-sudsing detergent mixed into one gallon (3.785 liters) of warm water. Surfaces shall then be flushed clean with fresh water.

D. Specific Surface Preparation: Surface preparation for the specific system shall be as designated in the Systems Index, Part 2.05 of these specifications.

3.4 SURFACE PREPARATION, WOOD AND COMPOSITION MATERIALS

A. Wood and composite materials shall have a moisture content prior to coating or painting below 15 percent as measured by an instrument such as a Delmhorst Model BD-7, unless recommended otherwise by the paint manufacturer.

B. All surfaces shall be thoroughly cleaned by use of mineral spirits, scrapers, and sandpaper or wire brushes to remove all dirt, oil, grease or other foreign substances. Finished surfaces exposed to view shall, if necessary, be made smooth by planing or sandpapering. Small, dry, seasoned knots shall be scraped, sandpapered, and thoroughly cleaned, and shall be given a thin coat of WP-578 Western Pine Association knot sealer before application of the priming coat. Large, open unseasoned knots, and all beads or streaks of pitch shall be scraped off, or if the pitch is still soft, it shall be removed with mineral spirits and the resinous area shall be thinly coated with knot sealer. After priming, all holes and imperfections shall be filled with putty or plastic wood (colored to match the finish wood), allowed to dry, and sandpapered smooth. Painting of interior wood and composite materials shall proceed insofar as practicable, only after masonry work has dried. Existing surfaces shall be cleaned of all loose or flaking paint and sandpapered as required.

C. Specific Surface Preparation: Surface preparation for the specific system shall be as designated in the Systems Index, Part 2.5 of this section.

3.5 COATING APPLICATION

A. Coating and paint application shall conform to the requirements of the Steel Structures Painting Council Paint Application Specifications SSPC-PA1, latest revision, for "Shop, Field and Maintenance Painting", and recommended practices of the National Association of Corrosion Engineers, the American Concrete Institute, the Forest Products Research Society and the Manufacturer of the paint and coating materials.

B. Before applying any paint or finish, all surfaces shall be thoroughly cleaned and prepared for painting as herein specified. All cleaned metal shall be primed or painted, as specified, immediately after cleaning to prevent new rusting or oxidation of cleaned surfaces.

C. Protective coverings or drop cloths shall be use to protect floors, fixtures, and equipment. Care shall be exercised to avoid lapping on glass or hardware. Coatings and paints shall be sharply cut to lines. Finished surfaces shall be free from defects or blemishes.

D. Application – Environmental Conditions

1. Do not paint surfaces that exceed manufacturer specified moisture contents or when none, the following moisture contents:
    a. Plaster and Gypsum Wallboard: 12 percent.
    b. Masonry, Concrete and Concrete Block: 8 percent.
    c. Interior Located Wood: 15 percent.
    d. Concrete Floors: 7 percent.
2. Do not paint or coat:
    a. Under dusty conditions.
    b. When light on surface measures less than 15 foot-candles.
    c. When ambient or surface temperature is less than 40 degrees Fahrenheit.
    d. When relative humidity is higher than 85 percent.
    e. When surface temperature is less than 5 degrees Fahrenheit above dew point.
    f. When surface temperature exceeds the manufacturer’s recommendation.
    g. When ambient temperature exceeds 90 degrees Fahrenheit, unless manufacturer allows a higher temperature.
3. No coating work shall be done under unfavorable weather conditions to wet or damp surfaces or in rain, snow, fog or mist.

4. When it is expected the air temperature will drop below 40 degrees F or less than 5 degrees F above the dewpoint within eight hours after application of coating or paint.

   Dewpoint shall be measured by use of an instrument such as a Sling Psychrometer in conjunction with the US Department of Commerce Weather Bureau Psychometric Tables.

   If above conditions are prevalent, coating or painting shall be delayed or postponed until conditions are favorable, unless conditions are acceptable to the paint manufacturer for any given coating. The days coating or painting shall be completed in time to permit the film sufficient drying time to prevent damage by atmospheric conditions.

5. Provide fans, heating devices, or other means recommended by coating manufacturer to prevent formation of condensation or dew on surface of substrate, coating between coats and within curing time following application of last coat.

6. Provide adequate continuous ventilation and sufficient heating facilities to maintain minimum 45 degrees Fahrenheit for 24 hours before, during and 48 hours after application of finishes.

E. All painting shall be well applied, leaving no sags, laps, brush, or other defects. Each coat must thoroughly dry before applying next coat, and all work must be carefully cut into a true line and left smooth and clean. Hardware trim and other items shall be removed as required for proper application of coatings.

   All painting shall conform to the following general conditions:

   1. Thickness of coating in mils shall mean the dry film thickness. The number of coats specified shall mean the minimum number of coats to be used. Additional coatings shall be required if necessary to obtain the specified film thickness.

   2. No coating work shall be done under unfavorable weather conditions.

   3. Prime coats shall be provided where called for as a part of the painting system. Shop prime coats shall conform to the specified painting system for the given item. It shall be the responsibility of the Contractor to coordinate work so that factory prime items are primed or painted with a coating compatible with the specified finish painting system.

   4. Particular attention shall be given to all welds, edges, and corners so as to get full and adequate coverage. Damaged shop prime coats or field applied prime coats shall be carefully replaced before finish painting. Surface preparation for replacement of damaged coats shall be such as to give a clean surface for proper bonding of prime coat. Finish coatings shall not be applied until touch-up prime coat has completely dried.

   5. Minimum between-coat drying items, as stated in the printed instructions of the coating manufacturer will be carefully observed.

6. Thinning shall be done only if necessary for workability of the coating material in accordance with the manufacturer's printed instructions. Use only the appropriate thinner.

7. Each coat shall be applied in a similar but different color from the preceding coat, the finish coat to be color selected by the Engineer.

3.6 SPECIAL REQUIREMENTS FOR GALVANIZED AND NON-FERROUS METALS

Where galvanized or non-ferrous metals are scheduled to be painted, the surface shall be brush blasted in accordance with SSPC-SP7 before finish is applied. Do not remove the galvanized coating. Damaged areas should be repaired with an appropriate zinc-rich primer, such as Tnemec Series 90-97.

3.7 INSPECTION

A. Inspection - General:

Concrete, plastic and wood surfaces shall be visually inspected to insure specified coverage has been attained. Where destructive testing is deemed necessary, an instrument such as a Tooke Gage shall be used. Thickness of coatings and paints on metal surfaces shall be checked with a non-destructive type thickness gauge. Coating integrity shall be tested with an approved inspection device. Holiday detection shall be performed prior to the application of aluminum or metallic finish coats. Holiday detectors shall not exceed the voltage recommended by the manufacturer of the coating system. For film thickness between 10 and 20 mils, a non-sudsing type wetting agent such as Kodak Photo-Flo shall be added to the water prior to wetting the detector sponge. All pinholes shall be marked, repaired in accordance with the manufacturer's recommendations and retested. No pinholes or other irregularities will be permitted in the final coating.

In cases of dispute concerning film thickness or holidays, the Engineer's calibrated instruments and measurements shall predominate. Wide film thickness discrepancies shall be measured and verified with a micrometer or other approved measuring instrument.

B. Inspection Devices:

The Contractor shall furnish, until final acceptance of coating and painting, inspection devices in good working condition for detection of holidays and measurement of dry-film thickness of coating and paint. The Contractor shall also furnish US Department of Commerce; National Bureau of Standards certified thickness calibration plates to test accuracy of dry-film thickness gauge and certified instrumentation to test accuracy of holiday detectors.

Dry-film thickness gauges and holiday detectors shall be made available for the Engineer's use at all times until final acceptance of application. Holiday detection devices shall be operated in the presence of the Engineer.

Acceptable devices for ferrous metal surfaces include, but are not limited to Tinker-Rasor Model M-1 holiday detector for coatings to 20 mils dry film thickness, Tinker-Rasor Models AP and AP-W holiday detectors for coatings in excess of 20 mils dry-film thickness, and Mikrotest or Positest unit for dry-film thickness gauging. Non-ferrous metal surfaces shall be checked with an instrument such as an Elcometer "Eddy Current" Tester or De Felsko Model 252. Inspection devices shall be operated in accordance with the manufacturer's instructions.

3.8 SAFETY AND HEALTH REQUIREMENTS

A. General: In accordance with requirements set forth by regulatory agencies applicable to the construction industry and Manufacturer's printed instructions and appropriate technical bulletins and manuals, the Contractor shall provide and require use of personnel protective lifesaving equipment for persons working in or about the project site.

B. Head and Face Protection and Respiratory Devices: Equipment shall include protective helmets which shall be worn by all persons in the vicinity of the work. In addition, workers engaged in or near the work during abrasive blasting shall wear eye and face protection devices and air purifying, half-mask or mouthpiece respirator with appropriate filter. Barrier creams shall be used on any exposed areas of skin.

C. Ventilation: Where ventilation is used to control hazardous exposure, all equipment shall be explosion-proof. Ventilation shall reduce the concentration of air contaminant to the degree a hazard does not exist. Air circulation and exhausting of solvent vapors shall be continued until coatings have fully cured.

D. Sound Levels: Whenever the occupational noise exposure exceeds maximum allowable sound levels, the Contractor shall provide and require the use of approved ear protective devices.

E. Illumination: Adequate illumination shall be provided while work is in progress, including explosion-proof lights and electrical equipment. Whenever required by the Engineer, the Contractor shall provide additional illumination and necessary supports to cover all areas to be inspected. The level of illumination for inspection purposes shall be determined by the Engineer.

F. Temporary Ladders and Scaffolding: All temporary ladders and scaffolding shall conform to applicable safety requirements. They shall be erected where requested by the Engineer to facilitate inspection and be removed by the Contractor to locations requested by the Engineer.

3.9 PRESERVATION

During construction, painter shall assume the preservation of all his work against damage by accident or otherwise, and shall leave the work clean and whole. The work will not be accepted

until all of the work has been completed and all retouching has been done. All work which is rejected, or for any reason has to be done over, will be done by the Contractor at his expense.

3.10 CLEANING

During the progress of the work, all other work shall be covered and fully protected from injury or painter's finish, and care shall be exercised not to splatter paint, enamel, etc., on adjacent work. Upon completion of the work, all staging, scaffolding and containers shall be removed from the site or destroyed in a manner approved by the Engineer. Name and data plates on equipment shall not be painted and shall be left clean and legible upon completion of the project. All damage to surfaces resulting from the work of this section shall be cleaned, repaired, or refinished to the satisfaction of the Engineer at no expense to the Agency.

3.11 SURFACES REQUIRING PAINTING

In general, the following surfaces are to be coated or painted:

A. All exposed metal surfaces and piping, interior and exterior.

B. All submerged or buried metal and some submerged concrete and masonry surfaces, as scheduled.

C. All structural and fabricated steel, including tanks and equipment and galvanized structural steel.

D. The interior of certain tanks and wet wells as specified in the schedule.

E. Exterior aboveground concrete and masonry, as scheduled.

F. The interior of certain structures as specified in the Schedule.

G. Equipment furnished without factory finish surfaces.

H. Doors, woodwork and architectural items.

I. Equipment furnished with factory finished surfaces to match pipe service color.

J. Fusion epoxy lined and coated steel piping and equipment to match pipe service color.

K. Dissimilar Materials: Where dissimilar metals are in contact, or where aluminum is in contact with concrete, mortar, masonry, wet or pressure treated wood, or absorptive materials subject to wetting, the surfaces shall be protected with a coat of bituminous paint conforming to MIL-C-18480 or to TT-V-51 or a coat of zinc chromate primer conforming to TT-P-645 to prevent galvanic or corrosive action.

3.12 SURFACES NOT REQUIRING PAINTING

A. Unless otherwise indicated, painting is not required on surfaces in concealed areas and inaccessible areas such as furred spaces, foundation spaces, utility tunnels, pipe spaces, and on buried piping.

B. Metal surfaces of anodized aluminum, stainless steel, chromium plate, copper, bronze, and similar finished materials will not require painting under this Section except as scheduled and defined below.

1. All stainless-steel parts/equipment, after its fabrication, shall undergo a passivation (pickling) process to ensure maximum resistance to corrosion and to remove all embedded iron and heat tint. All stainless-steel components and structures shall be submersed in a chemical bath of nitric acid and hydrofluoric acid to remove any residues that may be present on the material as a result of forming, manufacture, or handling. After removal from the pickling bath, the equipment must be washed with a high-pressure wash of cold water to remove any remaining surface debris and promote the formation of an oxidized passive layer which is critical to the long life of the stainless steel. Submergence insures complete coverage. Spray on chemical treatments and glass bead blasting are specifically not acceptable due to their inability to provide complete and uniform corrosion protection. Surfaces shall be subjected to a 24-hour water test or ferroxyl test to detect the presence of residual embedded iron and shall be re-treated, as needed, to remove all traces of iron contamination. All field welds shall be cleaned and passivated to remove iron (and prevent corrosion) in accordance with ASTM A380. Surfaces shall be adequately protected during shipping and handling to prevent contact with iron or steel objects or surfaces.

C. Portions of metal embedded in concrete, except for aluminum surfaces.

D. Electrical equipment with factory applied finish.

E. Do not paint moving parts of operating units; mechanical or electrical parts such as valve operators; linkages; sensing devices; and motor shafts, unless otherwise indicated.

F. Do not paint over required labels or equipment identification, performance rating, name, or nomenclature plates.

3.13 FINISH SCHEDULE

The following is a partial schedule and does not including industrial coatings and architectural coatings, it does not include all surfaces that require coatings. Coat unlisted surfaces with the same coating system as similar listed surfaces. Additional coating requirements are included with the architect's drawings and specifications for the buildings. Color selection shall be made by the Owner and provided in returned Contractor’s Paint Submittal.

A. System “A” Polymidoamine or Amine Cured Epoxy:

1. Exterior of all submerged piping and valves except for stainless steel piping.
2. Submerged pipe supports and hangers except for stainless steel.
3. Exterior of submerged pumps, mixers, motors and other equipment.
4. Clarifier sludge collector mechanisms including all structural and non-structural steel, scum boxes, and skimmers.
5. DAF sludge collector mechanisms including all structural and non-structural steel, float boxes, and skimmers.
6. Bell rings and underside of manholes covers and frames.
7. Sump pumps including the underside of base plates.
8. Field priming of ferrous metals surfaces with defective shop prime coating or where no other prime coating is specified.
9. Hydrated Lime Silo interior equipment and exterior of slurry tank.
10. Cast iron sluice gates and stem guides.
11. All other submerged iron and steel metal unless specified otherwise.

B. System “B” Protective Coal Tar: Underground pipe flanges, corrugated metal pipe couplings, flexible pipe couplings, and miscellaneous underground metals not specified to receive another protective coating system.

C. System “C” 100% Solids Epoxy: Coat all interior concrete surfaces below top of slab or wall of all structures including septage drain systems manholes and drop inlet boxes, contact channels including inlet, outlet, and overflow boxes and channels. Fill construction joints of all structures with epoxy grout, per 03100, prior to applying System C. Apply coating prior to drilling and installing pipe and grating anchors and supports. All existing modified structures listed shall be sandblasted and cleaned prior to coating. Coat exterior of all below grade structures with System “N” to prevent excessive moisture in concrete to be coated.

D. System “D” Polyamidoamine or Amine Cured Epoxy, Polyurethane:

1. Exposed sheet metal and flashing.
2. Exterior piping, valves, pipe hangers and supports, electrical conduit, and other supports, except for stainless steel.
3. Valve and gate operators and stands.
4. Structural steel (including primed and/or galvanized steel).

5. Process equipment (not submerged) including septage equipment, motors, equipment guards, equipment supports and other miscellaneous metals at the Septage Receiving Station Headworks, except for stainless steel and aluminum.

6. Cranes and hoist rails.

7. Exposed PVC piping and valves.

8. Electrical antenna masts and supports.

9. Exterior electrical cabinets, boxes, and exposed conduits that are not factory painted.

10. All other miscellaneous exposed metals and plastics unless specified otherwise.

E. System "N" Emulsified Asphalt Coating (see Section 07100): Exterior buried walls for damp proofing of all below grade structures that require coating as defined within this specification, including the Septage Receiving Station Headworks (aerated grit chamber and classifier area) and septage drain pump station.

F. System "O" Aromatic Elastomeric Polyurethane, or Epoxy: Submerged ferrous metals subject to abrasion.

G. System "P" Polyamide Epoxy/Acrylic: Exterior of steel structures and tanks previously coated with alkyd enamel.

H. System "AA" Polyamidoamine Epoxy: Ductile Iron Piping as defined in specification section 15062.

END OF SECTION

SECTION 10400

IDENTIFYING DEVICES

PART 1 GENERAL

1.1 DESCRIPTION

The work of this section consists of providing safety signs, identifying devices for buildings, structures, piping, valves, and underground warning tapes for buried utilities.

1.2 RELATED WORK SPECIFIED ELSEWHERE

A. Section 01300 - Submittals

B. Section 02229 – Utility Line marking

C. Section 15010 - General Process and Onsite Utility Piping Provisions

D. Section 16050 - General Electrical

1.3 SUBMITTALS

A. In accordance with Section 01300.

B. Samples of sign materials, colors and exterior letters, along with manufacturer's literature and shop drawings.

C. Submit a complete schedule of all signs, including sign label, type, location and support.

PART 2 MATERIALS

2.1 SIGNS - GENERAL

A. Colors, legends, and layout shall conform to OSHA 1910.145 requirements.

B. Overall size of signs 10 inches X 14 inches.

C. Material: 1/8-inch thick high performance plastic with over-laminate or rigid fiberglass with printed message and background sealed within a fiberglass resin, suitable for outdoor weather conditions. Seton Name Plate Corporation, New Haven, CT 06505; W.H. Brady Company, Milwaukee, WI 53201, or equal.

2.2 "DANGER" SIGNS

Two-inch high white letters "Danger" in red oval surrounded by a rectangular black field. Text wording 1½-inch high black capital letters on white field.

No. of Signs Required	Text Wording	Placement
1	“NO SMOKING, MATCHES OR OPEN LIGHTS”	Septage Receiving Station
1 per Bibb	“NON POTABLE, DO NOT DRINK”	1 At Each Hose Bibb

2.3 STRUCTURE IDENTIFICATION SIGNS

A. 3-ply melamine plastic, F.S. L-P-387A, Type NDB, 1/8-inch thick, Best Manufacturing Company, Kansas City, MO 64109; Architectural Graphic Systems, San Francisco, CA 94105, or equal.

B. Overall Size: 2-inches high by 24-inches wide minimum; all edges and corners square.

C. Lettering: engraved 1-inch high; similar to "Helvetica Medium" capital letters.

D. Colors: as selected by Engineer.

E. Location: for outdoor weather conditions. Specific location determined later.

F. Provide the following signs:

No. of Signs Required	Text Wording
1	“SEPTAGE RECEIVING STATION HEADWORKS”

2.4 IDENTIFICATION OF PIPING AND VALVES

A. Piping:

1. Plastic markers for coding pipe shall conform to ANSI A13.1 and shall be as manufactured by W.H. Brady Company, Seton Name Plate Corporation, or equal. Markers shall be the mechanically attached type that are easily removable; they shall not be the adhesive applied type. Markers shall consist of pressure sensitive legends applied to plastic backing which is strapped or otherwise mechanically attached to the pipe.

2. Plastic zip ties shall not be allowed for fastening.

3. Legend and backing shall be resistant to petroleum based oils and grease shall meet criteria for humidity, solar radiation, rain, salt, fog and leakage fungus, as specified by MIL-STD-810C. Markers shall withstand a continuous operating temperature range of -40°F to +180°F, for aeration piping provide temperature rating up to 300°F. Plastic coding markers shall not be the individual letter type but shall be manufactured and applied in one continuous length of plastic.

   Markers shall be provided in the following letter heights:

Outside Pipe Diameter (inches*)	Letter Height (inches)
Less than 1.5	1/2
1.5 through 6	1/2 - 1
Greater than 6	1 - 2

* Outside pipe diameter shall include insulation and jacketing.

4. In addition, pipe markers shall include uni- and bi-directional arrows in the same sizes as the legend.

5. Colors of identification and letters shall comply with the legend below and with ANSI A13.1. See Section 15010 for color code usage.

Pipe Identification Color	Background Color	Color of Lettering/Arrows
1	Yellow	Black
2	Green	White
3	Blue	White

6. All exposed pipes shall have a color indicator band around the circumference of the pipe, placed every 10-feet (width to be same as shown in paragraph 2.7.A.3). Colors bands shall comply with the following legend:

Process Pipe	Color Band	Ameron Paint #	Tnemec Paint #	Carboline Paint #
Potable Water	Safety Blue			S150
Non-Potable Water	Open Sky			5141
Reclaimed Water (3W)	Purple		BP-14	
Drains	Gray	ANSI-70		2758
Overflow	Gray	ANSI-70		2758
Raw Sewage	Cocoa Brown			9218
Sample Line	Light Green	RT-7605		
Vent	Gray	ANSI-70		2758
Bollards	Safety Yellow	YE-3		6666
Other Process Pipes	Tan	RT-8205		

B. Gate and Valves:

1. Gate and valve tags shall be 2½ inches by 2½ inches (or 4" long by 1.5" wide), custom engraved (one side) plastic for interior labels and anodized aluminum for exterior. Provide three lines engraving, up to eight characters per line. Background colors shall be reduction, blue, yellow, or green, as specified. Wording to be specified at a later date. Valve tag colors to correspond to piping identification colors, identified above, and conform to ANSI A13.1. For all exterior aluminum labels, provide engraving and gray/silver color background.

2. Gate and valve tags shall be as manufactured by Seton Nameplate Corporation, New Haven, Connecticut; Emed Company, Buffalo, NY; or equal.

C. Equipment and Electrical Tags:

1. Electrical conduits, equipment, and devices shall be identified in accordance with specification section 16010 and 11010.

2.5 UNDERGROUND WARNING TAPE

A. Underground warning tape shall be installed for all buried pipelines and utility services.

B. Warning tape shall conform to the materials specifications provided in section 02229.

PART 3 EXECUTION

3.1 MOUNTING SAFETY AND CHEMICAL SIGNS

A. Install the signs at the locations designated by the Engineer.

B. Mount signs with top of the sign 5'-6" above the floor.

C. Secure with No. 10 stainless steel screws, providing expansion shields for concrete.

D. Plastic ties shall not be used for fastening.

E. Mounting holes in signs shall be oversized to allow signs to “float” free.

3.2 MOUNTING ROOM & STRUCTURE IDENTIFICATION SIGNS

A. Where doors are present, mount on doors, centered between jambs, and top of signs 5'-6" above the floor.

B. Where no door is present and the facility has a wall where someone can enter the facility, mount on the wall, as directed by the Engineer.

C. Where there are neither doors nor walls, signs shall be mounted to a barrier or fence post, if present, as directed by the engineer.

D. Where no door, wall or post is present, a post shall be installed in accordance with typical detail C540 and located as directed by the engineer and the sign mounted thereto. Signs shall be anchored to post as described in typical detail C520.

E. Allow for posts, per typical detail C540, to support signage identified in the above tables.

F. Where signs can be attached to doors and walls, attach with 1/16" thick white vinyl foam tape.

3.3 IDENTIFYING DEVICES FOR PIPING AND VALVES

A. Piping: Identify all piping at approximately 10-foot centers and in general, at each valve and piece of equipment, but not less than once in each room whether or not concealed.

B. Install valve tags on all process and main utility valves. Tags are not required on hose bibs, faucets, and similar applications. Attach tags to handwheel or stem using stainless steel cable and SST end crimps; submit for approval.

3.4 UNDERGROUND WARNING TAPE

Underground warning tape shall be installed in accordance with the details provided in section 02229.

END OF SECTION

SECTION 11010

GENERAL MECHANICAL EQUIPMENT PROVISIONS

PART 1 GENERAL

1.1 DESCRIPTION

This section contains items that pertain to all mechanical work.

1.2 RELATED WORK SPECIFIED ELSEWHERE

A. Section 01610 – Seismic Design Criteria

B. Section 01010 - General Construction Information and Requirements

C. Section 01020 - Modifications to Existing Facilities and Order of Work

D. Section 01300 - Submittals

E. Section 03100 - Concrete

F. Section 09900 - Painting

G. Section 15080 - Piping Accessories and Appurtenances

H. Section 16050 - Electrical

1.3 WORK INCLUDED

The work consists of completely installing the mechanical systems as shown on the drawings and specified in other sections.

1.4 QUALITY ASSURANCE

A. Requirements of Regulatory Agencies: Comply with all applicable codes, rules, and regulations.

B. References: Comply with referenced standards as listed in the individual sections.

C. Fees and Permits: Obtain required permits necessary to execute the work under this division.

D. All pressure vessels, safety devices and appurtenances shall comply with standards of and bear stamp of ASME.

E. All electrical devices and wiring shall comply with standards of NEC. All devices shall be UL listed and so identified.

F. Testing: All mechanical equipment shall undergo the minimum factory and field testing as specified herein and Section 01010. Additional testing requirements over and above those specified herein may be included in the individual equipment specifications. These requirements shall be considered complimentary to the minimum requirements specified herein.

1.5 DRAWINGS

Drawings are diagrammatic and show the general design, arrangement and extent of the systems. Do not scale drawings for roughing in measurements, nor use as shop drawings. Make field measurements and prepare shop drawings as required. Coordinate work with shop drawings of other specification divisions.

1.6 SUBMITTALS: IN ACCORDANCE WITH SECTION 01300

A. Detailed submittal requirements are given in the individual sections.

B. Contractor shall investigate the capacity and space requirements of the proposed equipment before submitting shop drawings.

C. Factory test reports shall be submitted for acceptance prior to shipment of the equipment to the job site. Field test reports shall be submitted for acceptance prior to final acceptance of the equipment.

D. Factory test procedures shall be submitted to the engineer for approval prior to commencement of any factory testing.

E. Seismic and structural anchoring calculations shall be submitted to the engineer for approval prior to installation of equipment.

F. Operation and Maintenance manuals shall be submitted to the engineer for approval prior to acceptance of equipment, in accordance with specification section 01680.

1.7 WARRANTY

A supplier's written warranty shall be provided for the equipment specified in this section. The warranty shall be for a minimum period of one (1) year for start-up or 18 months from time of equipment shipment, whichever comes first.

1.8 PRODUCT HANDLING

Protect material, equipment, and apparatus provided under this section from damage, water and dust, both in storage and installed, until final acceptance. Provide temporary storage facilities for material and equipment. Material, equipment, or apparatus damaged because of improper storage or protection will be rejected. See Section 01640.

1.9 JOB CONDITIONS

A. Special Requirements:

1. Maintain emergency and service entrances usable to pedestrian and vehicle traffic at all times. Where trenches are cut, provide adequate bridging for traffic.
2. Coordinate shutdown of water, wastewater, or heating systems.

B. Schedule of Work: Arrange work to comply with schedule of construction. In scheduling, anticipate means of installing equipment through available openings in structure. See Section 01020.

C. Protection:

1. Completely cover motors and other moving machinery to protect from dirt, dust, and water during construction.
2. Cap all openings in pipe and ductwork to protect against entry of foreign matter.
3. Protect premises and work of other divisions from damage arising out of installation of work of this division.
4. Perform work in manner precluding unnecessary fire hazard.

1.10 SPECIAL TOOLS

At completion of project, provide one set of special tools required to operate, adjust, dismantle, or repair any equipment of this division, as specified in the individual sections for specific pieces of equipment. Special tools mean those not normally found in possession of mechanics or maintenance personnel.

PART 2 MATERIALS

2.1 GENERAL

A. All the mechanical equipment to be shipped disassembled shall be assembled in the manufacturer's shop to insure proper fitting of parts, then match-marked for erection, and disassembled for shipment.

B. Contractor shall be responsible for locating and installing sleeves, inserts, and supports as required during the stages of construction.

C. Contractor shall be responsible for making minor changes in the piping, and equipment locations due to structural obstructions or conflicts with work specified in other divisions.

2.2 FABRICATED STEEL

A. All steel members used in the fabrication of the equipment shall conform to the requirements or "Specifications for Structural Steel". ASTM A36. All stainless steel shall be Type 316 unless otherwise specified.

B. Design and fabrication of Structural Steel Members shall be in accordance with the latest edition of AISC "Specifications for the Design, Fabrication, and Erection of Structural Steel Plates, Bars and Strip," Designation A-123, or of the ASTM Standard Specifications for Zinc Coating (Hot Dip) or Iron and Steel Hardware, Designation A153067, as appropriate for Buildings. All welding shall conform to the latest standards of the American Welding Society.

C. All parts shall be amply proportioned for all stresses which may occur during fabrication, erection, and operation.

D. All stainless-steel parts/equipment, after its fabrication, shall undergo a passivation (pickling) process to ensure maximum resistance to corrosion. All stainless-steel components and structures shall be submersed in a chemical bath of nitric acid and hydrofluoric acid to remove any residues that may be present on the material as a result of forming, manufacture, or handling. After removal from the pickling bath, the equipment must be washed with a high-pressure wash of cold water to remove any remaining surface debris and promote the formation of an oxidized passive layer which is critical to the long life of the stainless steel. Submergence insures complete coverage. Spray on chemical treatments and glass bead blasting are specifically not acceptable due to their inability to provide complete and uniform corrosion protection.

2.3 BOLTS, NUTS, AND WASHERS

Bolts for the equipment assembly shall be hexagonal, refined bar iron, except where the equipment body is stainless steel, aluminum, or bronze alloy, the bolts shall be the same corrosion resistant material. Nuts shall be hexagonal, of the same metal as the bolts. All threads shall be clean cut and shall conform to US Standard B1.1 for Unified Screw Threads.

2.4 NAMEPLATES

Equipment nameplates shall be engraved or stamped on stainless steel and fastened to the equipment in an accessible location with oval head stainless steel screws or drive pins. Nameplates to have ¼-inch letters with Equipment Name and number as shown on P&ID Contract Drawings.

2.5 EQUIPMENT MOUNTS, GROUTING, AND VIBRATION ISOLATION

A. Where a steel or cast base is shown between the equipment and a concrete pedestal, it shall be painted after fabrication in conformance with applicable provisions of Section 09900. It also shall be equipped with drain pans and drain connections, where applicable.

B. All concrete plan dimensions for bases or pedestals shall be at least 6 inches larger in each dimension than the steel or cast base so that the distance between the anchor bolt and edge of concrete is at least 3 inches. Conduits, piping connections, drains, etc., shall be installed as shown on the Drawings, and/or standard mechanical details.

C. Where specified or noted in the Drawings, the equipment including the base, shall be mounted on or suspended from vibration isolators to prevent the transmission of vibration and mechanically transmitted sound to the supporting structure. Vibration isolation available internally in the equipment unit is not equivalent and shall not be provided when vibration isolation as specified herein is required. Normally provided internal vibration isolators need be replaced with rigid supports in such cases.

D. Details of the vibration isolators where required by certain units of mechanical equipment are included in the Specifications for furnishing and installing those units.

E. Furnish all necessary materials and construct suitable raised concrete foundations for all equipment installed, even though such foundations may not be indicated on the Drawings. The tops of foundations shall be at such elevations as will permit grouting as specified below.

F. In setting pumps, motors, and other items of equipment customarily grouted, make an allowance of at least one inch for grout under the equipment bases. All shims shall be removed. Unless otherwise approved, all grout shall be an approved non-shrink grout.

G. Grout shall be mixed and placed in accordance with the Manufacturer's installation instructions and/or Section 03100, whichever is more stringent. Where practicable, the grout shall be placed through the grout holes in the base and worked outward and under the edges of the base and across the rough top of the concrete foundation to a peripheral form so constructed as to provide a suitable chamfer around the top edge of the finished foundation.

H. Where such procedure is impracticable, the method of placing grout shall be as approved. After the grout has hardened sufficiently, all forms, hoppers and excess grout shall be removed, and all exposed grout surfaces shall be patched in an approved manner, if necessary, given a burlap-rubbed finish, and painted with at least two coats of an approved paint.

I. Equipment control panels and electrical devices and instrumentation mountings shall be provided as shown and as referenced in Division 17 Panel and Equipment Index.

2.6 ANCHOR BOLTS and SEISMIC CONSIDERATIONS

A. See Specification Section 01610. Contractor shall provide stamped and signed calculations to verify compliance.

B. It shall be the responsibility of the equipment manufacturer to determine the number, size, and location of all anchor bolts to be set in concrete. Unless indicated otherwise on the drawings, anchor bolts, nuts, and washers shall be Type 316 stainless steel.

C. Obtain anchor bolt templates from the equipment manufacturer to aid in locating anchor bolts in the concrete pad.

D. No equipment shall be anchored to vertical or overhead structural elements without written approval of the Engineer.

E. Inasmuch as most anchorage of equipment is to be made of poured-in-place concrete elements, it is imperative that types of anchorage be coordinated with the Contractor so that anchorage may be installed at time of pouring. If calculations and anchorage details are not submitted prior to pouring of concrete, the Contractor will become responsible for any strengthening of concrete elements because of superimposed seismic loading.

F. Piping with flexible connection and/or expansion joints shall be anchored such that the intended uses of these joints are maintained in the piping system.

2.7 BELT DRIVES

A. V-belt with cast iron sheaves rated not less than 1-1/2 times motor horsepower.

B. Multiple V-belts shall be matched sets.

2.8 SHAFT COUPLINGS

A. Shaft couplings for direct connected electric motor driven equipment 1/2 horsepower or larger shall be non-lubricated type, designed for not less than 50,000 hours of operating life. Where requirements of the equipment dictate specialized features, the manufacturer may substitute the coupling normally supplied for the service.

B. Coupling sizes shall be as recommended by the manufacturer for the specific application, considering horsepower, speed of rotation, and type of service. The use of couplings as specified herein shall not relieve the Contractor of his responsibility for precision alignment of all driver-driven units as specified by the equipment manufacturer.

C. Couplings shall be of the pin and pre-loaded neoprene cylinder type, designed to accommodate shock loading, vibration and shaft misalignment or offset. Stub shafts shall be connected through collars or round flanges firmly keyed to their shafts, to neoprene cylinders held to individual flanges by through pins. Couplings with cylinders pinned to both coupling flanges will not be acceptable.

2.9 BEARINGS

A. Unless otherwise specified all equipment bearings shall be oil or grease lubricated, ball or roller anti-friction type of standard manufacturer. Bearings shall be conservatively designed to withstand all stresses of the service specified and shall be selected on the basis of a 60 degrees C ambient temperature. Each bearing, except when otherwise noted, shall be rated in accordance with the latest revisions of AFBMA Methods of Evaluating Load Ratings of Ball and Roller Bearings for one of the following classes of B-10 rating life:

Class M1	8,000 hours of operation
Class M2	20,000 hours of operation
Class M3	50,000 hours of operation
Class M4	100,000 hours of operation
Class M5	200,000 hours of operation

B. Unless otherwise noted, all process-associated equipment, including motors, drivers and driven units shall have, as a minimum, bearings for Class M3 life.

C. All grease lubricated bearings, except those specified to be factory sealed and lubricated, shall be fitted with easily accessible grease supply, flush drain and relief fittings. Extension tubes shall be used when necessary. Grease supply fittings shall be standard hydraulic type designed for use with quick hydraulic couplings attached to grease guns. All equipment shall be equipped with an identical type of grease fittings, Alemite, Zerk, or equal.

D. Oil lubricated bearings shall be equipped with either a pressure lubricating system or a separate oil reservoir type system. Each oil lubrication system shall be of sufficient size to safely absorb the heat energy normally generated in the bearing under a maximum ambient temperature of 60 degrees C and shall be equipped with a filler pipe and an external level indicator gauge. To avoid work hardening or "brinelling" damage from vibration, bearings shall be removed and shipped separately, or rotors shall be locked in place to prevent movement during transport.

2.10 GUARDS

A. All exposed moving parts shall be protected with guards in accordance with the requirements of the State Division of Safety Standards.

B. Belt guards shall be fabricated of 16 gauge, expanded metal or wire screen with 70 percent free area and steel frame, covered both sides. Provide visual inspection of moving parts and insertion of tachometer without removal of guard. Provide access door in guard to permit checking of belt tension. Guards shall be galvanized after fabrication and shall be designed to be readily removable to facilitate maintenance of moving parts.

C. Shaft guards shall be solid 16 gauge galvanized steel, inverted "U" shape trough cover over entire length of exposed horizontal shafts, and tubular shape for vertical shafts. Extend cover to below bottom of shaft and couplings. Provide for lubrication of bearings without requiring removal of cover.

D. All equipment with exposed moving parts which operates automatically or by remote control shall be identified by signs reading "CAUTION - AUTOMATIC EQUIPMENT - MAY START AT ANY TIME". Signs shall be 10 inches by 14 inches in size and shall be constructed of corrosion-proof material with a heavy-duty porcelain enamel finish or 1/8" thick butyrate or fiberglass.Letters shall be white in a red oval on a black background. Signs shall be installed near exposed moving parts.

2.11 ELECTRIC MOTORS

A. Standards: Motors shall be built in accordance with IEEE Standards, NEMA Standard MGI, latest revision, and to the requirements specified herein. Where a conflict may exist, these specifications take precedence.

B. Type: Motors specified herein are three-phase squirrel cage for 1/2 HP and above; or single-phase types for less than 1/2 HP; or D.C. for D.C. Variable Speed Drives.

C. Rating: Each motor shall develop ample torque for its required service throughout its acceleration range at a voltage 10 percent below nameplate rating. Where detailed on the Electrical Drawings to be operated on a reduced voltage starters, the motor shall develop ample torque under the conditions imposed by the reduced voltage starting method. Each VFD shall be one horse power size larger than required motor size.

D. The motor shall not be required to deliver more than its rated nameplate horsepower, at unity (1.0) service factor, under any condition of mechanical or hydraulic loading.

E. All motors shall be continuous time rated suitable for operation in a 40 degrees C ambient unless noted otherwise.

F. Specific motor data such as HP, Service Factor, RPM, enclosure type etc., is specified under the detailed specification for the mechanical equipment with which the motor is supplied.

G. Single Phase Motors: Single phase 120, 208, or 230 volt motors shall have integral thermal overload protection or shall be inherently current limited.

H. Thermostats: Where indicated or specified, winding thermostats shall be snap action, bi-metallic, temperature-actuated switch. Thermostats shall be provided with one normally closed contact. The thermostat switch point shall be pre-calibrated by the manufacturer. All inverter duty motors shall be provided with winding thermostats, unless RTDs are specified. All explosion-proof motors shall be provided with winding thermostats.

I. See electrical specifications for additional details.

2.12 NAMEPLATES

The motor manufacturer's nameplates shall be engraved or stamped on stainless steel and fastened to the motor frame with stainless steel screws or drive pins. Nameplates shall indicate clearly all of the items of information enumerated in NEMA Standard MG1-10.38 or MG1-20.60, as applicable.

2.13 SUBMITTAL DATA

Submittal of motor data for acceptance shall include complete nameplate data in accordance with NEMA Standards cited above and, in addition, the following for motors 3 hp or larger:

A. Ambient temperature rating.

B. Service factor.

C. Efficiency at 1/2, 3/4 and full load.

D. Power factor at 1/2, 3/4 and full load.

E. Motor outline, dimensions and weight.

F. Descriptive bulletins, including full description of insulation system.

G. Bearing design data.

H. Special features (i.e., space heaters, temperature detectors, etc.).

I. Wiring diagrams for motor power leads, over-temperature switch, heater and moisture monitoring.

2.14 CONDENSATION HEATERS

Condensation heaters, where specified under the detailed mechanical specifications shall be of the cartridge or flexible wrap around type installed within the motor enclosure adjacent to core iron. Heaters shall be rated for 120 V, single phase with wattage as required. The heater wattage and voltage shall be embossed on the motor nameplate. Power leads for heaters shall be brought out at the motor lead junction box.

2.15 WINDING TEMPERATURE DETECTORS

Where specified under the detailed mechanical specifications for individual equipment or on all A.C. motors to be connected to a variable speed drive, there shall be a factory installed winding temperature detector consisting of 3 thermostats (1 per phase) wired in series, with leads terminating in the main conduit box. This device shall protect the motor against damage for overheating caused by single phase, over load, high ambient, abnormal voltage, locked rotor, frequent starts or ventilation failure. The protective device shall have normally closed contacts rated 120VAC, which opens on high motor temperature. Not less than two (2) sets of three (3) detectors shall be furnished with each motor requiring such detector with one left as a spare. Temperature detectors shall be TI Klixon 9700 series or equal.

2.16 SUBMERSIBLE TYPE1 PROTECTION DEVICES

Where specified under the detailed mechanical specifications for individual equipment, furnish and install at the motor control center (unless indicated otherwise) a solid state device that provides a warning signal when the motor oil reaches a certain level of contamination by water. The contamination level is determined by measuring the resistivity of the motor oil bath. The resistivity shall be measured using a probe (di-electrode). The probe is connected to a lead, which runs back through the motor cables to the sensing device. The sensing device shall trip an auxiliary relay at low resistance (100K ohms or lower), to provide an alarm. The submersible Type 1 protection device shall be ABS Pumps Inc., Sealminder or equal.

2.17 SUBMERSIBLE TYPE 2 PROTECTION DEVICES

Where specified under the detailed mechanical specifications for individual equipment, furnish and install at the motor control center (unless indicated otherwise) a solid state protection device for monitoring the temperature and leakage detectors installed at the equipment. The solid state device shall operate on the current sensing principal whereby a change in temperature or leakage

condition shall change the resistance of the associated sensor and thus alter the current in the sensing circuit. The protection device shall contain two sets of dry contacts, one for over temperature and one for leakage. The dry contacts will change state upon occurrence of an over temperature or leakage condition so as to shutoff the equipment on over temperature and provide an alarm for leakage. The submersible Type 2 protection device shall be Flygt, ITT Industries MiniCAS or equal.

2.18 SUBMERSIBLE TYPE 3 PROTECTION DEVICES

A. Each pump shall be provided with its own self-contained control and status protection device module which shall be mounted within the motor control center (unless indicated otherwise). This module shall operate from a 24 VAC transformer furnished with module and shall provide a single point within the control system for pump sensor output processing. The protection device module shall have a manual reset so that the operator must locally restart the pump and thus be provided with local indication as to the cause of pump stoppage.

B. The protection device module shall interface for the direct connection of all pump/motor internal monitoring devices by furnishing the module with four (4) 24 VAC Relays for the following functions.

1. Stator winding over temperature protection (stops pump, local LED indication).
2. Stator leakage alarm (local LED indication and contacts for remote alarm indication).
3. Lower bearing temperature protection (adjustable, stops pump, local LED indication).

C. The submersible Type 3 protection device shall be Flygt, ITT Industries, CAS or equal.

2.19 SINGLE PHASE MOTORS

A. General: Unless otherwise specified, motors smaller than 143T (1/2 hp) frame shall be single phase, capacitor start. Small fan motors may be split-phase or shaded pole type if such are standard for the equipment. Wound rotor or commutator type single-phase motors are not acceptable unless their specific characteristics are necessary for the application.

B. Voltage: Motors shall be rated for operation at 115 volts, single phase, 60 Hz. Should unusual conditions require a three-phase motor on a frame smaller than 143T, it shall be designed for 200 volts, three phase, 60 Hz, but only after written approval has been received from the Engineer.

C. Enclosure: Motors shall be totally-enclosed in conformity with NEMA Standard MG1-10.35. Small fan motors may be open type if suitably protected from moisture, dripping water and lint accumulation.

1. Locked rotor current shall not be greater than specified in NEMA Standard MG1-12.32, Design "N".

D. Bearings: Motors shall be provided with sealed ball bearings lubricated for 10 years normal use.

2.20 THREE PHASE MOTORS - FRAMES 143T THROUGH 449T

A. General: All motors 1/2 HP and larger shall be on a NEMA frame 143T or larger. Motors shall be designed and connected for operation on a 240 or 480 volt, 3 phase, 60 hertz alternating current system, as applicable. Dual voltage (230/460) rated motors are acceptable.

B. All motors shall be NEMA Design B, normal starting torque unless noted otherwise, Starting KVA/HP (Locked rotor) shall not exceed the values given in NEMA Standard MG1-10.37. Motors shall be manufactured by US Motors, General Electric, Westinghouse, Reliance, or equal.

C. Bearings: Anti-friction motor bearings shall be designed to be re-greasable and initially shall be filled with grease suitable for ambient temperatures to 40 degrees C. Bearings shall be AFBMA Types BC or RN, heavy duty, or shall otherwise be shown to be suitable for the intended application in terms of B-10 rating life, Class M3 or better.

1. All grease lubricated bearings, except those specified to be factory sealed and lubricated, shall be fitted with easily accessible grease supply, flush, drain and relief fittings. Extension tubes shall be used when necessary. Grease supply fittings shall be standard hydraulic type as manufactured by the Alemite Division of the Stewart-Warner Corporation.

D. Insulation: Insulation systems shall be Class B or F (except as modified below) and shall be the manufacturer's premium grade, resistant to attack by moisture, acids, alkalies, and mechanical or thermal shock.

E. Enclosures: Motors shall have a cast iron frame and cast iron or stamped steel conduit box. Conduit box shall be split from top to bottom and shall be capable of being rotated to four positions. Synthetic rubber like gaskets shall be provided between the frame and the conduit box and between the conduit box and its cover. Motor leads shall be sealed with a non-wicking non-hygroscopic insulating material. A pad with drilled and tapped hole, not less than 1/4-inch diameter, shall be provided inside the conduit box for a motor frame grounding stud.

Motors weighing more than 50 pounds shall be equipped with at least one lifting lug. All hardware shall be corrosion resistant. Motors shall be delivered with manufacturer's standard paint.

The following specific features are required in addition to the preceding general specifications for the motor enclosures noted:

1. Open Drip Proof - Manufacturer's standard design with Class B insulation, stamped steel motor lead junction boxes and 1.15 service factor (@ 40 degrees C).

2. Totally Enclosed Fan Cooled - TEFC motors shall include Class B insulation, cast iron junction box, 1.15 service factor (@ 40 degrees C) tapped drain holes (corrosion resistant plugs for frames 286T and smaller and automatic breather/drain devices for frames 324T and larger), upgraded insulation by additional dips and bakes to increase moisture resistance.

3. Explosion Proof - Explosion proof motors shall include Class B insulation, 1.15 service factor (@ 40 degrees C). Tapped drain holes (corrosion resistant plugs for frames 286T and smaller and automatic breather/drain/drain devices for frames 324T and larger), UL label for Class 1, Division 1, Group D Hazardous areas.

4. Severe Duty - Motors shall be of the corrosion resistant type conforming to motors designated by the manufacturer as "Chemical Duty", "Mill and Chemical", "Custom Severe Duty", or similar applicable manufacturer's quality designation. Severe duty motors shall include Class F insulation (applied at Class B rise), 1.15 service factor (@ 40 degrees C), tapped drain holes (corrosion resistant plug for frames 286T and smaller automatic breather/drain devices for frames 324T and larger), epoxy finish, upgraded insulation by additional dips and bakes to increase moisture resistance.

5. Submersible - Motors shall be housed in a watertight casing and shall have Class F insulated windings which shall be moisture resistant. Pump motors shall have cooling characteristics suitable to prevent continuous operation in a totally, partially, or non-submerged condition continuously without overheating or other damage. The power cable shall be of adequate length to allow the unit to be wired as detailed on the electrical drawings without splices.

6. Inverter Duty – Motors shall be premium efficient design with inverter grade (Class H) insulation. Each inverter duty motor shall meet NEMA MG-1, Part 31 specifications for variable frequency drive (VFD) inverter duty applications. Motors shall be US Motors 841 Plus or equal.

7. Efficiency - Unless otherwise specifically specified for a specific motor, all motors shall be high-energy efficient type. Efficiencies shall be as determined in accordance with IEEE Standard 112 and NEMA MG-1-12.59. Motors shall be US Electric Motors "Premium Efficiency"; Baldor "Super-E", or equal.

2.21 ELECTRICAL DEVICES FURNISHED WITH MECHANICAL EQUIPMENT

A. Control panels supplied with mechanical equipment shall have the control switches, indicating lights, relay logic, and dry contact SCADA interfaces as indicated for each panel on the P&ID Drawings. Unless otherwise specified or shown all electrical power, control or instrumentation devices furnished as a "package" with mechanical equipment shall conform to the latest issue and addenda to the Joint Industry Council Electrical Standards for Mass Production Equipment (EMP-1-67), applicable NEMA Standards, National Electric Code (NEC 1999), or as modified herein.

B. Panels housing electrical equipment shall be NEMA rated for area into which panel is to be installed as shown on Contract Electrical Drawings. NEMA 4X panels shall be stainless steel. NEMA 1, 12 or 3R panels shall be galvanized steel, electrostatic applied baked enamel, painted gray. Panels located in Class 1 locations shall be explosion proof.

C. Devices mounted in non-ventilated panels shall be rated for a 50 degrees C (122 °F) ambient. Panels with devices rated less than 50 degrees C shall have ventilation fans and louvers. Louver openings shall have removable metal filters. All outdoor panels shall have heaters with guards and thermostat. Fans and heaters shall be powered from panel internal 120VAC control power.

D. A main panel power disconnect device to disconnect all power within the panel shall be an integral part of the panel and shall be one of the following types:

1. A horsepower rated heavy-duty fused safety switch or circuit breaker for 480, 240, or 208 volt, 1 phase or 3 phase panels. An outer door mounted operator for each switch or breaker padlockable in the off position shall be provided.

2. Circuit breaker for 120 volt, 1 phase panels.

E. Individual motor circuit protector (magnetic only circuit breaker) or fused protection shall be provided for each motor feed from panel.

F. All panels supplied with a 480-volt power feeder shall be provided with an integrally mounted dual winding 120-volt secondary control power transformers with primary and secondary fusing. Control power transformers shall have the neutral grounded.

G. All door mounted devices shall be of a heavy-duty industrial type quality. Lights, switches and pushbuttons shall be standard 30mm diameter, NEMA 13, U.L. listed and water & oil tight. All outer door mounted devices shall have black phenolic nameplates with 3/16" (minimum) white letters fastened by device assembly or stainless steel screws.

H. All indicating lights shall be full voltage 120VAC, LED type with push to test switch and wiring. Light lens colors shall be as follows:

Open/On	Green
Closed/Off	Red
Alarm/Trouble	Amber
Power On	White

I. Control relays shall be plug-in type with clear see-through sealed housing. Provide relay energized neon lamp or LED inside relay housing.

J. Time delay relays shall be solid state, plug in type with LED timer energized indicator lights.

K. All fuses shall have visible blown fuse indicator lights.

L. Contacts for external status, alarms or equipment interlocking shall be of the isolated contact type and provided as required per individual equipment specifications or Process and Instrumentation (P&ID) Drawings. Contacts shall be rated 10 amps at 120VAC continuous pilot duty. Alarm contacts shall be of the maintained latching contact type, requiring manual reset. Reset pushbuttons shall be provided and located on outer door for latching alarms.

M. Motor starters shall be magnetic, 120VAC coil solenoid operated, NEMA rated for horsepower of supplied equipment, contactor type, with chatter-proof armatures. Each motor starter to have a normally open and a normally closed auxiliary contacts. Provide one bimetallic type thermal overload relay for each phase.
An outer door insulated mechanical reset mechanism shall be installed for each motor starter thermal overload reset.

N. Watertight gasketed conduit hubs shall be used for all conduit penetrations to outdoor panels. Conduit entries to outdoor panels shall not enter top of panels.

O. Auxiliary devices (pressure switches, flow switches, etc.) located remotely from panels but furnished under this Section shall have enclosures as specified in the individual mechanical sections, or in conformance with the NEMA area classification noted on Contract Electrical drawings.

P. Schematic (elementary) or connection wiring diagrams, and equipment material lists shall be furnished for all panels. For panels containing a complex control scheme, a written operational theory shall be cross-referenced to the schematic diagram. The wiring diagram in its "as built" form shall be fastened to the panel door when panel is delivered to jobsite. The equipment material list shall identify the actual manufacturer, manufacturer's part or model number and a cross-reference as to its location in the panel. Generic part or model numbers are not to be used in material lists.

2.22 WIRING

A. Conductors extending beyond a panel to other auxiliary equipment which is pre-wired on a skid type or package base shall be protected by galvanized rigid steel conduit. Where terminating at a motor or other similar device requiring frequent movement or which produces excessive vibration liquid tight type flexible conduit shall be used. Liquid tight conduit will be limited to three (3) feet maximum length at any termination. All pre-wired wiring shall be copper, #14 AWG minimum.

B. Input or output instrumentation level signals shall be 4-20 mA and provided as required per the individual equipment specification and Process & Instrumentation(P&ID) drawings. All signal wiring shall have copper twisted shield pairs with overall shield.

C. Separate power, control and instrumentation terminal strips shall be provided for all external panel connections. All terminal points shall have black machine printed identification numbers on white background.

D. All wires inside panels and on pre-wired packages and skids shall have wire labels at each end point. Wire labels shall be white shrink tubes with permanent ink black machine typed lettering.

2.23 PRESSURE GAUGES

Pressure gauges furnished with mechanical equipment shall be as specified in Section 15080.

2.24 TOOLS AND SPARE PARTS

A. All special tools required for exclusive operation and maintenance of respective items of equipment shall be furnished with those items of equipment by the manufacturer. This includes special tools, instruments, accessories required for proper "in-plant" adjustment, maintenance, overhaul, and operation. Tools shall be high-grade, smooth, forged, alloy tool steel.

B. All tools and spare parts shall be carefully packed in cartons, labeled with indelible markings, and shall be adequately treated for a long period of storage. Complete ordering information including manufacturer, part number, part name, and equipment name and number(s) for which the part is to be used shall be supplied with the required spare parts. The tools and spare parts shall be delivered and stored in a location as directed.

C. Spare parts for certain equipment provided under Divisions 11, 15, 16 and 17 have been specified in the pertinent Sections of the Specifications. All spare parts shall be collected and stored in a designated area. In addition, an inventory listing all spare parts, the equipment they are associated with, the name and address of the supplier, and the delivered cost of each item shall be furnished. Copies of actual invoice for each item shall be furnished with inventory to substantiate the delivered.

2.25 LUBRICANTS

Provide all mechanical equipment with a sufficient supply of correct lubricant for starting, testing, and an initial 120-day operation period. All lubricants shall be of types recommended by the applicable equipment manufacturer. Subject to the approval of the equipment manufacturer's, lubricants shall be limited to the least number or types required for normal maintenance of all equipment. Not less than 90 days before the date scheduled for field testing of equipment three (3) copies of a listing indicating all lubricants for item of mechanical equipment shall be provided. Unless otherwise noted, all grease lubrication fittings shall be of an approved standard hydraulic type.

2.26 LIFTING LUGS

Lifting lugs shall be provided for all equipment weighing 50 pounds or more.

2.27 VIBRATION

A. This section specifies the maximum allowable vibration levels for all mechanical equipment over 20 horsepower. Additional requirements that may be more stringent may also be listed in individual equipment specifications. In that case, the more stringent of the two requirements shall apply. Testing of equipment at the factory and in the filed as identified in PART 3 of this specification shall demonstrate compliance with the specified vibration limits. All vibration tests shall be conducted under actual operating conditions:

1. Unfiltered readings at each unit shall have less than the following peak to peak amplitudes.

Operating Speed (revolutions per minute)	Centrifugal Blowers	Unfiltered (Overall) Peak-to-Peak Amplitude (mils)		
		Other Rotating Equipment	Non-Clog Mixed Flow Pumps	Clean Fluid Pumps
0 - 300	N/A	5.0	6.0	6.0
301 - 600	N/A	4.0	5.0	5.0
601 - 900	N/A	3.0	4.0	3.0
901 - 1,200	N/A	2.0	3.5	2.0
1,201 - 1,500	N/A	1.8	3.0	1.8
1,501 - 1,900	N/A	1.5	2.5	1.5
1,801 - 2,400	N/A	1.0	2.0	1.0
2,401 - 3,000	N/A	0.8	1.5	0.8
3,001 - 3,600	1.25	0.7	1.3	0.7
Above 3,600	1.0	0.6	1.2	0.6

2. Vibration Velocity Limits: Unless otherwise specified, equipment is not to exceed the following peak velocity limits:

Item	Unfiltered Overall Limit (inches per second)	Any Filtered Peak Limit (inches per second)
Non-Clog or Mixed Flow Pumps	0.35	0.25
Clean Fluid Pumps	0.25	0.20
Motors and Steady Bearings	0.25	0.20
Gear Reducers, Radial	Not to exceed AGMA 6000-A88 limits	
Other Reducers, Axial	0.10	0.10
Centrifugal Blowers	0.15	0.10

B. For all equipment, axial shaft vibration displacements (relative to casing) shall not exceed 50 percent of the maximum lateral shaft vibration displacements (relative to casing existing at any point along the shaft).

C. The above vibration responses are to include the range from 5.0 Hz to 5000 Hz and shall therefore encompass both low and high frequency responses of the subject equipment. The measurements shall be obtained with the equipment installed and operating at any capacity within the specified operating range. In addition to these maximum unfiltered readings, it is also stipulated that no narrow band spectral acceleration component, whether sub-rotational, higher harmonic or asynchronous multiple of running speed, shall exceed 40 percent of the synchronous displacement amplitude component without manufacturer's detailed verification of the origin and ultimate effect of said excitation.

Any equipment showing excessive vibration shall be corrected by the Contractor at his expense and the equipment retested.

D. The Contractor shall furnish a written report covering all the test values and data for each unit tested.

PART 3 EXECUTION

3.1 EQUIPMENT INSTALLATION

A. Belt Driven Equipment: Mount with motors on common steel base with adjustable motor mount.

B. Pumps: Align pump and motor. Completely fill steel and cast iron pump bases with concrete grout after properly set.

C. Install equipment so nameplates are visible.

D. Basis for equipment and material installation is the published recommendations of manufacturer. Submit such recommendations for review.

E. Pipelines and other connections to mechanical equipment shall be installed square and shall not put in strain or use the equipment for support unless it is specifically designed for it.

3.2 IDENTIFICATION

A. Provide manufacturers' nameplates on all equipment, identifying manufacturer's name, model number, size, capacity, and electrical characteristics.

B. Leave all manufacturers' nameplates clean and legible. Install all equipment so view of nameplates is not obstructed.

C. Identify all equipment with symbol number and service as shown. Identification shall be on 1-1/4 inch by 3 inch, or larger nameplates, securely fastened to equipment.

D. Provide engraved identification of function on switches and manually operable controls.

3.3 CLEANING

A. During progress of work, keep premises reasonably free of debris, cuttings, and waste material. Upon completion of work, and at other times as directed, remove all such debris from premises.

B. Clean equipment and materials. Remove foreign materials including dirt, grease, splashed paint, and plaster. Restore to original condition any finish damaged.

3.4 FACTORY QUALITY CONTROL TESTING

A. All pumps and mechanical equipment shall receive the following minimum factory testing. Additional testing requirements may be specified in the individual equipment specification sections.

B. All pumps shall be provided with manufacturer's standard factory quality control testing as modified herein.

C. All pumps greater than 5 horsepower shall receive a hydrostatic test of the pump casing at 1.5 times the pump shut off head.

D. All pumps shall be statically and dynamically balanced and shall have a certified balancing report.

E. All pumps 5 horsepower and above shall receive a standard manufacturers bench test that shall include a minimum of 5 test points defining the pump curve. Test points shall correspond to the design points given in the individual pump specification.

The remaining test points shall define the pump curve above and below the specified design conditions. In addition, pump shut off conditions shall also be tested. Test procedures shall follow appropriate sections of the Hydraulic Institute Standards in addition to the requirements in this and other Sections.

1. As a minimum, pump head, flow, power, speed, efficiency and NPSH shall be determined and recorded.

F. All pumps scheduled to be driven by variable frequency drives shall be factory tested with a minimum of 5 test points at full speed and 5 test points at each speed specified under the design conditions in the individual pump specifications. If no alternate speed conditions

are specified, 5 test points shall be provided at the minimum operating speed of the pump as recommended by the Manufacturer.

G. Vertical turbine pumps shall have bowl tests only.

H. Pump Test Tolerances: In accordance with appropriate Hydraulic Institute Standards, except the following modified tolerances apply:

1. From 0 to plus 5 percent of head at the rated design point flow.
2. 0 to plus 5 percent of flow at the rated design point head.
3. No negative tolerance for the efficiency at the rated design point.
4. No positive tolerance for vibration limits. Vibration limits in Hydraulic Institute Standards do not apply, use limits specified in this Section of the Specifications.

I. All non-submersible pumps greater than 10 horsepower shall also be tested for vibration in each plane at each exposed bearing location, on the pump, and on the motor. Vibration limits shall meet the requirements specified in Section 2.27 or more stringent requirements if specified in the individual equipment specifications.

J. All non-submersible pumps and non-vertical turbine pumps greater than 15 horsepower shall also receive a noise test. Measure the unfiltered overall A-weighted sound pressure level in dBA at 3 feet horizontally from the surface of the equipment on four sides at the mid point of the equipment height (set up temporary facilities to replicate field conditions, as shown on the contract drawings, including surrounding piping and walls). Pump and driver shall not exceed 85 dBA or lower noise level if specified in the individual equipment specifications. Pumps will need to pass the same noise test in the field, using actual installed conditions (including surrounding facilities), as described in the below the field performance testing section. If the pump does not meet noise limitations in the factory or installed field condition, manufacturer shall take immediate steps to correct the issue and limit the noise below allowable limits.

K. For all pumps, except vertical turbine pumps, the actual job motor shall be used unless an alternate means of driving the equipment is agreed to by the Engineer prior to testing.

L. All mechanical equipment shall be provided with the manufacturer's standard factory quality control tests, which shall clearly demonstrate conformance with the specifications and the specified manufactured equipment is free from defects. Standard tests shall be as modified herein.

M. All blowers for aeration or channel air systems shall be provided with a standard ASME PTC-13 (wire to air) test at the blower rated speed. Blower airflow shall be adjusted based on inlet throttling or blower speed to match the blower service specified. All blowers for aeration or channel air systems shall be provided with a hydrostatic test to 15 psig.

N. All blowers over 40 horsepower shall also be tested for vibration in each plane at each exposed bearing location, on the blower, and on the motor. Vibration limits shall meet the

requirements specified in Section 2.27 or more stringent requirements if specified in the individual equipment specifications.

O. All blowers and Fans over 10 horsepower shall receive a noise test. Measure the unfiltered overall A-weighted sound pressure level in dBA at 3 feet horizontally from the surface of the equipment on four sides at the mid point of the equipment height (set up temporary facilities to replicate field conditions, as shown on the contract drawings, including surrounding piping and walls). Blower and driver shall not exceed 85 dBA or lower noise level if specified in the individual equipment specifications. Blowers and fans will need to pass the same noise test in the field, using actual installed conditions (including surrounding facilities), as described in the below the field performance testing section. If the blower/fan does not meet noise limitations in the factory or installed field condition, manufacturer shall take immediate steps to correct the issue and limit the noise below allowable limits.

P. All other rotating equipment greater than 40 horsepower shall be tested for vibration in each plane at each exposed bearing location, on the blower, and on the motor. Vibration limits shall meet the requirements specified in Section 2.27 or more stringent requirements if specified in the individual equipment specifications.

Q. All other rotating equipment greater than 40 horsepower shall receive a noise test. Measure the unfiltered overall A-weighted sound pressure level in dBA at 3 feet horizontally from the surface of the equipment on four sides at the mid point of the equipment height (set up temporary facilities to replicate field conditions, as shown on the contract drawings, including surrounding piping and walls). Blower and driver shall not exceed 85 dBA or lower noise level if specified in the individual equipment specifications. Equipment will need to pass the same noise test in the field, using actual installed conditions (including surrounding facilities), as described in the below the field performance testing section. If the equipment does not meet noise limitations in the factory or installed field condition, manufacturer shall take immediate steps to correct the issue and limit the noise below allowable limits.

R. For all mechanical equipment, the actual job motor shall be used unless an alternate means of driving the equipment is agreed to by the Engineer prior to testing.

3.5 TEST WITNESSING

Factory tests shall be non-witnessed unless specified in the individual equipment specifications. When factory tests are indicated as witnessed, the costs for witnessing the tests by the Engineer, travel, and lodging costs shall be born by the Owner for the first test. All such costs for any subsequent factory re-testing required shall be born by the Contractor. The Contractor shall notify the Owner in writing a minimum of 21 calendar days prior to commencement of witnessed factory tests.

3.6 FIELD REPORTS

Submit reports for Field and Factory testing. Report features:

A. Report results in a bound document in generally accepted engineering format with title page, written summary of results compared to specified requirements, and appropriate curves or plots of significant variables in English units.

B. Include appendix with a copy of raw, unmodified test data sheets indicating test value, date and time of reading, and initials of person taking the data.

C. Include appendix with sample calculations for adjustments to raw test data and for calculated results.

D. Include appendix with the make, model and last calibration date of instrumentation used for test measurements.

E. Include in body of report a drawing or sketch of the test system layout showing location and orientation of the test instruments relative to the tested equipment features.

3.7 FIELD QUALITY CONTROL TESTING

A. Temporary Facilities and Labor: Provide all necessary fluids, utilities, temporary piping, temporary supports, temporary access platforms or access means and other temporary facilities and labor necessary to safely operate the equipment and accomplish the specified testing. With Owner's permission, some utilities may be provided by fully tested permanently installed utilities that are part of the Work.

B. Instrumentation: Provide all necessary test instrumentation, which has been calibrated within one year from date of test to recognized test standards traceable to the National Institute of Standards and Technology, Washington, D.C. or approved source. Properly calibrated field instrumentation permanently installed as a part of the Work may be utilized for Field Quality Control Tests.

C. Field Quality Control Tests: Schedule test date and notify Engineer at least 7 days prior to start of test. Test Measurement and Result Accuracy:

D. Use test instruments with accuracies as recommended in the appropriate referenced standards. When no accuracy is recommended in the referenced standard, use 1 percent or better accuracy test instruments.

E. Do not adjust results of tests for instrumentation accuracy. Measured values and values directly calculated from measured values shall be the basis for comparing actual equipment performance to specified requirements.

3.8 FIELD TESTING

A. All pumps and mechanical equipment shall receive the following minimum field testing. Additional field testing requirements may be specified in the individual equipment specification sections.

B. Submit test plan indicating test start time and duration, equipment to be tested, other equipment involved or required; temporary facilities required, number and skill or trade of personnel involved; safety issues and planned safety contingencies; anticipated effect on Owner's existing equipment and other information relevant to the test.

C. Perform general start-up and testing procedures for the equipment as recommended by the Manufacturer’s written start up instructions.

D. Prior to testing, verify equipment protective devices and safety devices have been installed, calibrated, and tested and that the manufacturer’s representative has certified proper installation of the equipment.

E. All mechanical pumps and equipment shall be given an 8-hour performance test and a 5-day facility startup/operational test in accordance with Section 01670. Equipment shall be operated continuously under normal operation as intended by the Contract Documents. Operational testing shall include automatic control and instrumentation systems. Any equipment or control systems that fail to perform properly shall be corrected and retested by the Contractor. Upon completion of a satisfactory operational test, a certificate of completion shall be prepared and signed by the Owner.

F. In addition to an operational test, certain mechanical equipment and pumps shall be given a field performance test as specified herein to demonstrate the complete system as installed meets the specified performance requirements.

G. All operational and performance testing shall be completed and accepted prior to acceptance of the equipment by the Owner. Equipment warranty periods shall not begin until final acceptance of the equipment by the Owner.

3.9 FIELD PERFORMANCE TESTS FOR PUMPS

A. All pumps shall be provided with a field performance test in accordance with applicable Hydraulic Institute Standards in addition to the requirements in this and other Sections.

B. All pumps 5 horsepower and smaller shall receive a field test that shall include testing the pump at the specified design condition. Pump Flow, head, and horsepower shall be recorded.

C. All pumps greater than 5 horsepower shall receive a field test that shall include a minimum of 5 test points defining the pump curve. Test points shall correspond to the design points given in the individual pump specification. The remaining test points shall define the pump curve above and below the specified design conditions. In addition, pump shut off conditions shall also be tested. Test procedures shall follow appropriate sections of the Hydraulic Institute Standards in addition to the requirements in this and other Sections. As a minimum, pump head, flow, power, speed, efficiency and NPSH shall be determined and recorded.

D. All pumps scheduled to be driven by variable frequency drives shall be tested with a minimum of 5 test points at full speed and 5 test points at each speed specified under the design conditions in the individual pump specifications. If no alternate speed conditions are specified, 5 test points shall be provided at the minimum operating speed of the pump as recommended by the Manufacturer.

E. Vertical turbine pumps shall be tested as a complete system after assembly.

F. Pump Test Tolerances: In accordance with appropriate Hydraulic Institute Standards, except the following modified tolerances apply:

1. From 0 to plus 5 percent of head at the rated design point flow.
2. 0 to plus 5 percent of flow at the rated design point head.
3. No negative tolerance for the efficiency at the rated design point.
4. No positive tolerance for vibration limits. Vibration limits and test methods in Hydraulic Institute Standards do not apply, use limits and methods specified in this or other Sections of the Specifications.

G. All non-submersible pumps greater than 10 horsepower shall also be tested for vibration in each plane at each exposed bearing location, on the pump, and on the motor. Vibration limits shall meet the requirements specified in Section 2.27 or more stringent requirements if specified in the individual equipment specifications.

H. All non-submersible pumps greater than 15 horsepower shall also receive a noise test. Measure the unfiltered overall A-weighted sound pressure level in dBA at 3 feet horizontally from the surface of the equipment on four sides at the mid point of the equipment height. Pump and driver shall not exceed 85 dBA or lower noise level if specified in the individual equipment specifications.

I. For all pumps, the actual job motor or driver shall be used.

J. Submit for engineering approval an alternative plan or waiver to the above listed field testing in cases where a certified pump curve has been provided by the manufacturer (as

specified in the technical specifications) and there is insufficient water or appurtenances available to perform the field test. Submittal of alternative plan does not guarantee engineering acceptance.

3.10 FIELD PERFORMANCE TEST FOR MECHANICAL EQUIPMENT

A. All mechanical equipment shall be provided with a field performance tests.

B. Test all mechanical equipment at rated design conditions. Record equipment horsepower, speed, and other process performance parameters. Demonstrate compliance with the specified design conditions.

C. All equipment over 20 horsepower and shall also be tested for vibration in each plane at each exposed bearing location, on the machine, and on the motor. Vibration limits shall meet the requirements specified in Section 2.27 or more stringent requirements if specified in the individual equipment specifications.

D. All blowers and Fans over 2 horsepower and all other equipment over 20 horsepower shall receive a noise test. Measure the unfiltered overall A-weighted sound pressure level in dBA at 3 feet horizontally from the surface of the equipment on four sides at the mid point of the equipment height. Blower and driver shall not exceed 85 dBA or lower noise level if specified in the individual equipment specifications.

E. For all mechanical equipment, the actual job motor or driver shall be used.

3.11 FIELD REPORTS

A. Submit reports for field performance testing. Report features:

B. Report results in a bound document in generally accepted engineering format with title page, written summary of results compared to specified requirements, and appropriate curves or plots of significant variables in English units.

C. Include appendix with a copy of raw, unmodified test data sheets indicating test value, date and time of reading, and initials of person taking the data.

D. Include appendix with sample calculations for adjustments to raw test data and for calculated results.

E. Include appendix with the make, model and last calibration date of instrumentation used for test measurements.

F. Include in body of report a drawing or sketch of the test system layout showing location and orientation of the test instruments relative to the tested equipment features.

3.12 PRELIMINARY OPERATION

Operate any portion of installation if requested. Such operation does not constitute acceptance of the work as complete.

3.13 STARTUP SERVICE

A. Prior to startup, check auxiliary connections, lubrication, venting, controls, wiring, equipment for proper rotation, and install and properly set relief and safety valves to insure readiness of systems.

B. Start and operate all systems. All mechanical equipment and systems shall be placed in service by qualified factory authorized technicians who shall provide a written statement that the equipment has been installed and placed in service as recommended by the manufacturer. If, in the opinion of the Engineer, a start-up technician is not qualified or competent to work on a particular piece of equipment, the Contractor shall replace that person with one who is qualified and competent.

END OF SECTION

SECTION 11330

SEPTAGE RECEIVING STATION

PART 1 GENERAL

1.1 DESCRIPTION

Scope: The work of this section consist of furnishing and installing one (1) Septage Receiving Station for screening of floating, particulate and fibrous material and for conveying, washing, dewatering and compacting the screenings and for discharging the compacted screenings into bagged dumpsters; as well as for removal and classifying of grit; all as shown on the drawings and described in these specifications. The screening and grit removal system shall be integrated in a pre-engineered housing (in two skid mounted units). The septage receiving station will be equipped with two pH meters (one hand held, one in-line), flow meter, combustible gas detector panel, motorized inlet pinch valve, and card reader.

1.2 EQUIPMENT TAG NUMBER

Tag Numbers	Equipment Name
MOV 01	Septage Receiving Inlet Valve
SCR 11	Septage Screening Drive
SCR 12	Septage Screening Screw Drive
BLR 23	Septage Grit Blower
DRV 22	Septage Horizontal Grit Conveyor Drive
DRV 21	Septage Inclined Grit Conveyor Drive
WSH 31	Septage Grit Agitator Drive
DRV 32	Septage Grit Dewatering Screw Drive

1.3 RELATED WORK SPECIFIED ELSEWHERE

A. Section 01300: Submittals

B. Section 01610: Seismic Design

C. Section 01615: Wind Design

D. Section 01680: Operations and Maintenance Manual

E. Section 01670: Startup Services

F. Section 01675: Training Services

G. Section 09900: Painting

H. Section 11010: General Mechanical Equipment Provisions

I. Section 15100: Valves

J. Division 16: Electrical

1.4 SUBMITTALS

A. In accordance with Section 01300, submit shop drawings, parts lists, complete descriptive literature, catalog cut sheets, engineering and physical data, etc. as necessary to fully describe and define all items to be furnished under this specification. Complete design calculations shall be submitted to show compliance with design and seismic criteria.

B. Complete design calculations shall be submitted to show compliance with design and seismic and wind criteria, in accordance with Section 01610 and 01615.

C. Provide operation and maintenance manuals in accordance with Specification Section 01680.

D. Provide startup services and training in accordance with Specification Section 01670 and 01675

E. Per Section 16011:

1. For each control panel, provide one or three line diagrams, I/O loop, elementary diagrams, nameplate, elevation and fabrication drawings.
2. Provide annotated software programming listings and OI screen shots.

1.5 QUALITY ASSURANCE

A. All equipment furnished under this Section shall:

1. Be of a manufacturer who has been regularly engaged in the design and manufacture of the equipment;

2. Be of latest design; and,

3. Be demonstrated to the satisfaction of the owner that the quality is equal to the equipment specified herein.

B. Factory Assembly and Testing: The septage receiving station shall be factory assembled and factory tested at the point of manufacture. A second test shall be conducted on-site after the installation of the septage receiving station, to ensure that the system is installed properly and performs according to the specification. The test shall be conducted by a service representative, which is employed by the equipment manufacturer. The U.S. testing shall be videotaped and a copy of the videotape shall be provided to the Engineer. The combined unit shall be shipped assembled for erection by the Contractor excluding the discharge piping.

C. Design Requirements

1. The entire septage receiving station shall be designed to meet the following criteria:

Septage Sludge Service Condition	Criteria Unit
Screen	
Peak hydraulic flow, at 3% solids:	650 gpm
Maximum solids inlet loading	10%
Wet screenings capacity:	100 cfph
Nominal screen basket diameter:	47 in
Perforated opening spacing:	¼" (6mm)
Inlet & Outlet Flange Diameter	4-inch & 10-inch
Screw Motor	2.0 HP
Drum Motor	2.0 HP
Aerated Grit Chamber	
Peak hydraulic flow, at 3% solids:	650 gpm
Min. Capture Efficiency at 200 microns	95%
Inlet & Outlet Flange Diameter	10-inch & 12-inch
Air Requirements	23 scfm @ 5psi
Blower Motor	¾ HP
Horizontal Grit Conveyor Motor	¾ HP
Inclined Grit Conveyor Motor	1.5 HP

Grit Washing Classifier	
Min. Capture Efficiency at 200 microns	95%
Max Volatile Solids in Discharged Grit	3%
Max Water Content in Discharged Grit	15%
Washed Grit Volume (Max)	1500 lb/hr
Washer Agitator Motor	1.5 HP
Classifier Dewatering Screw Motor	2.0 HP

2. The units shall be designed to screen septic sludge that is supplied in tankers. The screenings shall be washed, transported, dewatered, compacted and bagged. The unit shall be entirely enclosed to prevent odor nuisance. The screened septage shall pass downstream to a totally enclosed aerated grit chamber, where grit shall be settle to the bottom of the chamber and transported to a conveyor, where grit and settled sediment is removed from the system and discharged into a grit washing classifier.
3. The screen's perforated spacing shall be the clear opening between perforations.
4. The unit shall be capable of processing spherical objects with a diameter of 3-1/8". Such objects shall be conveyed through the auger and shall be discharged with the screenings. The unit shall be capable of processing the screenings load specified above.
5. Due to the abrasive nature of septic sludge containing grit, there shall be no plastic-to-plastic or metal-to-metal wearing surfaces in the unit.
6. The motorized valve at the inflow connection shall be controlled by the liquid level (non-contact radar transmitter) in the septage receiving screen tank in combination with delay timers and PH of the effluent septage. At the high start level or acceptable PH level, the valve is opened. If the level drops to the low stop float switch, or if the PH is out of a predetermined range, the valve is closed and an alarm triggered. There shall be an override of these controls so that a mis-calibrated sensor will not shut down the entire receiving system. This override shall be located at the Septage Control Panel and not at the field mounted Hauler Control Panel.
7. The screening equipment shall produce dewatered screenings capable of passing the EPA Paint Filter Test as described in method 9095 of EPA Publication SW-486.
8. To minimize odors and nuisance, the tanks, conveyance, dewatering and compaction zones shall be completely enclosed.
9. The spray wash system shall be enclosed such that spray water, aerosols or leakage do not contaminate the operating floor.
10. The unit shall be supplied with an automatic valve at the inlet connection, a handheld pH meter, an inline pH meter, a flowmeter, a combustible gas detector, and a card reader.

D. Environmental Conditions: The equipment will be continuously and intermittently exposed to the following environmental conditions:

1. Ambient air temperature may range from 20°F to 115°F. Relative humidity may fluctuate between 10 and 100 percent. All equipment supplied shall be rated for a Class I, Division 2, Group C and D hazardous environment.
2. Exposures: The equipment will be subject to rainfall, wind (including dust and dirt), direct sunlight and a corrosive environment due to wastewater, splashing, hydrogen sulfide and hydrocarbon gases.

1.6 WARRANTY

A. A supplier's written warranty shall be provided for the equipment specified in this section. The warranty shall be for a minimum period of five (5) years from start-up or 66 months from time of equipment shipment, whichever comes first.

PART 2 MATERIALS

2.1 ACCEPTABLE MANUFACTURERS

A. The septage receiving station shall be supplied by SAVÉCO® North America, Inc. (models SAVI Screen Beast VFA-1200-DM, Aerated Grit WasteMaster DSF2-M20, and Grit Washer Classifier FSM SWA-TB); or equal.

B. All equipment specified in this Section shall be supplied by a single manufacturer.

C. The naming of a manufacturer in this specification is not an indication that the manufacturer’s standard equipment is acceptable in lieu of the specified component features. Naming is only an indication that the manufacturer may have the capability of engineering and supplying a system as specified.

2.2 DESIGN REQUIREMENTS AND MATERIALS

A. Unless otherwise specified in these specifications, the entire equipment shall be manufactured from AISI 304 austenitic stainless steel shapes (rods, angles, and channels), pipes, and sheets. All mechanical parts shall be designed to handle the forces that may be exerted on the unit during fabrication, shipping, erection, and proper operation according to the O&M manual.

1. All stainless-steel parts/equipment, after its fabrication, shall undergo a passivation (pickling) process, in accordance with ASTM A380 and A967, to ensure maximum resistance to corrosion and to remove all embedded iron and heat tint.

a. All stainless-steel components shall be submersed in a chemical bath of nitric acid and hydrofluoric acid to remove any residues that may be present on the material as a result of forming, manufacture, or handling.

b. After removal from the pickling bath, the equipment must be washed with a high-pressure wash of cold water to remove any remaining surface debris and promote the formation of an oxidized passive layer which is critical to the long life of the stainless steel.

c. Submergence insures complete coverage. Spray on chemical treatments and glass bead blasting are specifically not acceptable due to their inability to provide complete and uniform corrosion protection.

d. Surfaces shall be subjected to a 24-hour water test or ferroxyl test to detect the presence of residual embedded iron and shall be re-treated, as needed, to remove all traces of iron contamination.

e. All field welds shall be cleaned and passivated to remove iron (and prevent corrosion) in accordance with ASTM A380.

f. Surfaces shall be adequately protected during shipping and handling to prevent contact with iron or steel objects or surfaces.

B. Screening System:

1. Equipment provided shall be a fully automatic, self-cleaning, Beast Septage receiving unit incorporating a perforated plate rotating drum screen and an integral screenings washing, conveying and dewatering/compacting system contained within a stainless steel tank. The tank mounted rotating drum screen unit will be provided with an angle-of-inclination of 25˚ from horizontal.
2. Each rotating drum screen unit shall be provided with a rotating screen basket, exterior basket cleaning spray bar(s), exterior basket cleaning brush, concentric transport screw with integral screenings washing, dewatering and screenings compaction zone.
3. Fabricate all parts and assemblies from type 304 stainless steel unless otherwise noted.
4. Rotating Drum Screen Basket:

    a. The Drum Screen Basket shall be designed and built to withstand the maximum possible static hydraulic forces exerted on the screen by the liquid flow. Structural and functional parts shall be sized to prevent deflections or vibrations that may impair the screening, conveying, washing and compacting operations.

    b. The drum screen basket shall be mounted at the drive end using a large diameter, single row, heavy duty industrial bearing assembly with integral ring gear comprising part of the drive system. The bearing assembly shall have a built in grease fitting.

c. The drum screen basket shall be of a cylindrical shape with perforations around the entire basket.

d. The drum screen basket shall be perforated plate with maximum openings of 6 mm. Bar screens, wire mesh or wedge wire, or stationary screens of any type will not be acceptable screen media.

e. The drum screen basket shall have angled lifting vanes to retain loose solids during rotation and lift them up and into the screw auger trough. Helical shaped vanes which can tumble screenings rather than lift screenings shall not be accepted.

f. The screenings collection trough shall extend beyond the screen opening at the influent end to maximize solids capture and reduce screenings recycle.

g. The drum screen shall have no support arms on the influent side of the screen basket to snag and accumulate long stringy solids. Screens with influent side support arms will not be accepted.

h. The drum screen basket shall be provided with a seal system incorporating an HDPE seal. Any unit which does not incorporate this design will not be accepted.

5. Drum Screen Basket Cleaning Brush and Spray Bar(s)

a. The exterior of the rotating drum screen basket assembly shall be cleaned by a high pressure stainless steel spray bar and a stainless steel backed polypropylene brush. The drum screen basket shall continuously rotate in one direction during the cleaning cycle and pass through the topmost portion where it is cleaned by the spray bar and brush.

b. The exterior cleaning brush shall be mounted on a holding device which keeps the brush in constant contact with the screen basket and can be adjusted to compensate for brush wear.

6. Screenings Transport Screw and Dewatering Zone

a. The screenings transport screw shall be constructed of an epoxy coated high strength alloy steel for maximum torsion resistance in the screw. The screw shall be near-white blasted, primed with an inorganic zinc primer and coated with a 2 part epoxy.

b. The screenings collection trough shall be attached to the screenings transport tube by a drum support flange. The screw drive assembly shall be attached via a drive support flange welded to the upper end of the screenings transport tube.

c. The concentric transport/dewatering screw shall be designed to transport and dewater the screened material. The unit shall be provided with screw

flights of constant pitch approaching the compaction zone to prevent clogging in the compaction zone. Designs incorporating a decreasing pitch screw will not be accepted.

d. The screenings transport screw shall be supported by a sealed, self-lubricating lower bronze bushing. The lower bushing shall be designed such that it does not take any thrust load from the transport screw. Designs requiring bearings of any type or externally lubricated bushing(s) or water injection into the housing shall not be accepted.

e. The compaction zone shall be integral to the transport screw and compaction tube. The compaction zone shall be designed to form a screenings plug and return water released from the screened material back to the tank through circular holes that are machined into the screenings compaction tube.

f. The compaction zone housing shall be fabricated entirely of stainless steel. The lower body shall be a welded construction with a minimum of 10 mm end plates for maximum torsion resistance. The bottom of the compaction zone shall be curved to promote maximum cleaning and minimum depositing of materials. Units utilizing a fiberglass reinforced compaction zone housing will not be accepted.

g. The compaction zone shall be furnished with a latched, hinged access cover with a gasket. The access cover shall incorporate a motor cut-out switch to prevent operation of the unit with the access cover open. Units which require the use of any tools to gain access to the compaction zone will not be accepted

7. Spray Wash Systems

a. Drum and flush spray systems shall each be furnished with an automatically controlled electrically actuated full port stainless steel ball valve, stainless steel piping and fittings, flexible reinforced hoses and spray nozzles.

b. Compaction zone spray system shall be furnished with a control solenoid valve, stainless steel piping and fittings, flexible reinforced hoses and spray system.

c. A drum wash system shall be located over the rotating perforated drum which utilizes a spray bar(s) with adequate spray nozzles to ensure a consistent spray pattern over the entire length of the drum.

d. A screenings spray wash system shall be located in the lower section of the transport tube to break up and return organic materials to the flow stream and to ensure maximum screenings washing.

e. A compaction zone wash system shall be provided which periodically cleans the compaction and dewatering zone via a stainless steel wash system located in the uppermost end of the compaction/dewatering chamber. The header shall be designed to completely wash the full surface of the transport tube drainage area

8. Screen Tank

a. The Septage receiving unit shall be supplied with a two-stage stainless steel tank. The bottom of the influent section of the tank shall be sloped toward the screen to eliminate sedimentation. The inlet section shall be sized to match the inlet shape of the drum to prevent a wall for solids to dam and collect. Units with rectangular tanks which encourage sedimentation shall not be accepted.

b. The second stage tank shall house the rotating drum screen unit.

c. The inlet stage of the tank shall be provided with a flush wash system

9. Drive Units

a. The Septage receiving unit shall be a dual drive system which allows the drum and screw to be driven independently to optimize solids removal.

b. Gear reducers shall be a helical gear type as manufactured by NORD or approved equal. Provide a cast iron frame; design in accordance with AGMA recommendations for wastewater service.

c. Transport screw shall be directly driven by a flange mounted gear reducer.

d. The transport screw gear reducer shall be bolted to a machined flange welded to the upper end of the transport tube.

e. The rotating screen drum basket shall be driven by a flange mounted gear reducer using a spur gear and bull gear assembly.

f. Gear reducers shall be driven by 240/480V, 3 ph, 60 hz motors rated for the installation environment location. Motor horsepower shall be as noted in above.

g. Chain drives, belt drives, friction drives, or hydraulic drives will not be accepted.

h. Designs incorporating a separate upper bearing for the transport screw will not be accepted.

10. Drum Retraction

a. The complete screen assembly must be able to be retracted away from the front seal plate to allow for replacement of the seal without pivoting

the screen or requiring lifting devices such as cranes or come along hoists.

b. Units that require pivoting of the screen for seal replacement shall be required to provide a complete workable lifting system.

11. Pivot Assembly

a. The complete screen assembly must be able to pivot out of the tank without requiring the removal of the drive unit, screw or drum. Units that require disassembly of the unit shall not be allowed.

12. Open Gearing Automatic Grease Lubrication System

a. The Beast perforated drum drive system will be provided with a factory mounted automatic grease lubrication system that will spray a precise amount of lubricant directly to the loaded profiles of the drive gear teeth.

b. The automatic grease system shall be air driven and controlled from the control panel to signal the pump to supply the open gear lubricant to a positive-displacement metering valve. The metered lubricant is sent to a spray manifold where the open gear lubricant is directed to a set of nozzles. The pressurized air (80-120 psi compressor supplied by manufacturer) blows the open gear lubricant out of the nozzle and onto the open gearing. After a predetermined amount of open gear lubricant is dispensed, both the air system and the pump shut off until the next lubrication cycle. Grease system and compressor) shall be controlled and powered by screen panel.

c. System shall consist of a ½ gallon grease reservoir, two (2) air regulators, a 3-way 120-volt NEMA 4X brass body solenoid valve, dual feed positive-displacement metering valve with flexible nozzles and necessary tubing and fittings.

C. Aerated Grit Removal System

1. The grit removal system shall be mounted as depicted by the contract drawing. Effluent from the screen tank(s) enters the long rectangular grit tank that includes aeration to enhance the capacity as well as the grit separation degree. The settled grit is transported by a horizontal spiral out the front of the unit where an externally mounted inclined grit dewatering spiral is located. The inclined spiral dewaters and transports the grit to the grit discharge point.
2. Materials of Construction: All wetted parts shall be constructed from stainless steel except for the shaftless grit spirals. The shaftless spirals shall be constructed from a high strength alloy steel and supplied with a protective primer coating. Bearings, electrical devices, motor and gear reducer shall be of the manufacturer’s standard materials.

3. Shop Surface Preparation/Coating: All welds shall be cleaned and passivated to remove weld spatter, slag and discoloration. Bearings, electrical devices, motor and gear reducer shall be provided with the manufacturer's standard coating system.
4. Grit Tank: The flow shall enter a sedimentation chamber where the grit/sand particles will settle.

    a. The chamber shall be constructed from type 304L stainless steel and shall be provided with a type 304L stainless steel support structure that provides complete support for the grit system. The grit tank shall have an overflow weir with a 12 inch flanged effluent connection.

    b. The top of the grit chamber shall be provided with type 304L stainless steel lift-off cover sections held in place by stainless steel bolts and nuts. The hatch will be equipped with a motor cut-out switch near the effluent weir outlet. Each cover section shall be gasketed.

    c. Along one side of the tank, coarse bubble aeration diffusers will be supplied to enhance the capacity as well as the grit separation degree. The system shall be constructed from type 304L stainless steel and include horizontal headers and vertical drop legs to an external connection on the grit tank.

    d. Grit tank provided with a drain connection fitted with 2-inch ball valve.

5. Horizontal Grit Conveyor

    a. The shaftless spiral screw assembly shall be fabricated from epoxy coated high strength alloy steel with the following minimum dimensions.

    b. The horizontal shaftless grit spiral conveyor shall have a diameter of 10.9 inches with a minimum flight thickness of 0.79 inches.

    c. The horizontal shaftless spiral conveyor shall be supported at the drive end only. No support is needed on the other end. Due to the thickness of the screw, the patented production process and low rotation speed, no wear problems are present.

    d. Two (2) wear bars bolted to the inside of the conveying tube are fabricated from type 304L stainless steel and have a minimum thickness of 10 mm (0.39 inches).

    e. The horizontal shaftless spiral rotates slowly (5 rpm) as it conveys the settled solid to the inclined extraction screw.

    f. The horizontal grit spiral conveyor is welded to a solid shaft at the drive end that exits the wall of the grit chamber and is connected to the gearbox.

    g. Drive shall be furnished complete with stainless steel stuffing box, seal packing gland, and gland follower. The stuffing box discharge shall have

a drip lip with 1 inch NPT connection so that any leakage can be drained away from the tank.

6. Inclined Grit Dewatering Conveyor Screw

    a. General Description - The grit dewatering conveyor assembly shall be inclined and shall dewater and convey grit out of the aerated grit chamber. The conveyor shall be supported by the drive at one end. No support is required at the other end.

    b. The shaftless spiral screw assembly shall be fabricated from epoxy coated high strength alloy steel with the following minimum dimensions.

    c. The grit dewatering shaftless screw conveyor shall have a diameter of 7.0 inches with a minimum thickness of 0.79 inches.

    d. The grit dewatering conveyor assembly shall be inclined and shall dewater and convey grit out of the aerated grit chamber. The conveyor shall be supported by the drive at one end. No support is required at the other end.

    e. The inclined conveying grit screw is connected via an elastic coupling to the gear reducer shaft. Due to the thickness of the flight and the proprietary production process only a short shaft is needed to turn the screw.

    f. Units with the drive end stub shaft welded to the grit dewatering screw conveyor torque tube will not be accepted.

    g. The grit dewatering shaftless screw conveyor shall be housed in a type 304L stainless steel transport tube with a minimum wall thickness of 0.12 inches.

    h. The transport tube shall be provided with five (5) wear bars fabricated of type 304L stainless steel with a minimum thickness of 8 mm (0.32 inches) bolted to the inside along longitudinal axis

7. Grit Spiral Drive Assemblies – Each

    a. Each grit spiral shall be provided with a helical type gear reducer as manufactured by Varvel. The unit will be provided with a cast iron frame and be designed in accordance with AGMA recommendations for Class I service based on the horsepower required to operate the screw.

    b. Horizontal grit screw drive motor shall be TEFC, 0.75 HP, 1800 RPM, 460 Volt, 3 phase, 60 Hz. The motor shall be NEMA design code B and be direct coupled to the reducer.

c. Inclined grit screw drive motor shall be TEFC, 1.5 HP, 1800 RPM, 460 Volt, 3 phase, 60 Hz. The motor shall be NEMA design code B and be direct coupled to the reducer.

d. Each motor/reducer assembly shall be directly connected to the main drive shaft via the reducer's hollow shaft. Designs that incorporate additional chain and sprocket assemblies that might bind or break are not acceptable

8. Grit Aeration System

a. The grit removal system shall be furnished with a 304L stainless steel aeration header system, complete with down comer pipes and horizontal header pipes with stainless steel diffusers.

b. All pipe, pipe fittings, pipe supports, and hardware shall be stainless steel.

c. One regenerative blower shall be mounted on the tank and furnished by the grit removal system manufacturer. The blower shall be furnished to provide the volume of air 23 scfm at a minimum air pressure of 3-5 psig.

d. Blower assembly shall be furnished complete with inlet air filter/silencer, discharge silencer, pressure relief valve (calibrated at 10 inches H2O below the maximum rated pressure of the blower), flexible connectors, check valve, pressure gauge and motor.

e. Each blower motor shall be TEFC, 2 HP (minimum), 1800 RPM, 460 Volt, 3 phase, 60 Hz. The motor shall be NEMA design code B and be direct coupled to the reducer.

f. Blower and all components shall be suitable for application in corrosive environment and hazardous environment

9. Effluent Chamber

a. A fixed weir shall be provided near the discharge end of the tank to regulate tank level.

D. Grit Washing Classifier

1. The grit and organics discharged from a grit classifier, grit bucket elevators or other dry feed source enters the grit washer by means of an inlet hopper fixed to the top of the unit.
2. The grit particles which may include attached organics and some free organics are sheared using a revolving stirrer and washed by up flow water designed to lift the organics, clays, and fine silt out of the washer. The clean grit settles in the hopper bottomed chamber with integral classifier and is dewatered as it is transported by the shafted screw auger to the upper discharge chute.

3. The settled grit shall form a grit bed with the height automatically controlled by a 4-20 mA loop powered pressure transducer.
4. The organic content of the washed grit shall not exceed 3% and the maximum water content of the washed grit shall not exceed 15%. Equipment discharging washed grit with higher organic content and/or higher water content will not be accepted.
5. The grit washer shall be designed to capture 95% of grit particles up to 200 micron (70 mesh) with a specific gravity of 2.65 at peak flow capacity as noted in subsection 1.5, above.
6. The inclined shafted grit screw conveyor shall transport and dewater the washed grit from the grit washer hopper to a higher point of discharge.
7. Grit washer shall be capable of operating in batch or continuous feed mode. Grit washers than cannot operate continuously shall not be allowed.

8. Grit Washing Tank

    a. A tank constructed from type 304 stainless steel with a minimum thickness of 3 mm (1/8-inch) shall be provided to house the grit washing components.

    b. The tank housing shall be designed and built to withstand the maximum static and hydraulic forces based on the loads specified.

    c. The tank shall be completely covered to minimize odors and leakage.

    d. The tank shall have a removable top cover for maintenance access.

    e. Tank shall be provided with the following connections:

System	Design
Influent connection:	12 x 20 inch
Effluent connection:	6 inch flanged
Wash water connection:	1 inch NPT
Tank drain connection:	2 inch NPT
Grit bed level sensor:	1.5 inch Process Connection

    f. Four (4) support legs from type 304 stainless steel.

9. Grit Classifier Screw

    a. The shafted grit screw shall be composed of a 12 inch diameter screw conveyor inclined at 40 degrees and operating in a 4 mm thick type 304 stainless steel tube. The spiral flights on the screw shall be sectional type,

high tensile alloy steel two thirds-pitch base section welded to a steel pipe with solid steel stub shaft.

b. The shafted grit screw inlet hopper shall be flanged connected to the grit discharge/transportation tube.

c. The lower end of the screw shall be supported by a stainless steel stub shaft and a greaseable bronze bushing sealed with three grease seals from NBR. Bushing and stub shaft are accessible for maintenance without removing the screw from the grit washer.

d. The grit screw shall have a discharge height of 10.33 feet above the mounting elevation, as shown on drawings.

e. The grit washer shafted screw drive unit shall consist of a helical speed reducer and motor. The speed reducer shall be directly coupled to the motor and torque arm mounted to the grit transportation tube. The drive shall rotate the conveyor at the specified speed.

1) Speed reducers shall be manufactured to AGMA standards. The speed reducer shall have a service factor of 1.0.

2) The motor shall be an 1800 RPM, squirrel cage, induction type, 2.0 HP, TEFC, ball bearing heavy duty unit of ample power for starting and operating the mechanism without overload, with a service factor of 1.15.

3) Power supply to the equipment shall be 460 volt, 60 hertz, 3 phase.

4) Drive shaft supported by a four hole flanged ball bearing directly bolted to the grit screw transportation tube.

10. Stirrer Assembly

a. The stirrer assembly slowly turns through the water and grit bed to loosen and free organics contained within the grit.

1) The stirrer shaft from type 304 stainless steel will be a solid keyed shaft for direct insertion into the hollow shaft of the stirrer drive reducer. Shaft will be supported by a four-hole flanged bearing mounted on top of the grit washer tank bridge.

2) Multiple stirring arms will be welded to the stirrer shaft. Stirring arms shall be from type 304 stainless steel.

3) An arm with skimmer device at the end will be welded to the stirrer shaft. Skimmer arms shall be from type 304 stainless steel.

b. The grit washer stirrer assembly drive unit shall consist of a helical speed reducer and motor. The speed reducer shall be directly coupled to the motor and directly mounted to the grit washer tank bridge. The drive shall rotate the stirrer at the specified speed.

1) Speed reducers shall be manufactured to AGMA standards. The speed reducer shall have a service factor of 1.0.

2) The motor shall be an 1800 RPM, squirrel cage, induction type, 1.5 HP, TEFC, ball bearing heavy duty unit of ample power for starting and operating the mechanism without overload, with a service factor of 1.15.

3) Power supply to the equipment shall be 460 volt, 60 hertz, 3 phase.

11. Grit Bed Washing

a. What water is introduced into the bottom of the grit washer tank. The distribution header evenly distributes wash water throughout the fixed grit bed removing organic material from the grit towards the overflow weir.

b. Wash water is controlled by a 1 inch wash water solenoid valve, manual ball valves, pressure reducing valve, ball float water meter with transparent PVC case and pressure gauge.

c. Wash water supply of 15 gpm with a maximum pressure of 30 psi.

E. Bagger:

1. The discharge chutes, both grit and screenings discharge, shall be furnished with a bagging device to contain and encase associated dewatered screenings and grit. The bagging device shall use replaceable bags.

2. The bagging devices shall be fabricated of minimum 12 gauge (2.5 mm) stainless steel.

3. The screenings and grit baggers shall be designed to be fitted with replaceable plastic bags.

4. The bagging devices will each be fitted with a replaceable magazine of continuous clear plastic hose, 22 inches in diameter by 260 feet long, and 1.5 mils thick.

2.3 ELECTRICAL DEVICES AND CONTROLS

A. All controls necessary for the fully automatic operation of the units (including, but not limited to, sequential operation of inlet valve, screen grease system and compressor, screen drive, screen screw, grit blower, grit conveyors, classifier agitator, and classifier dewatering screw, solenoid valves), shall be provided by manufacturer.

B. The inflow connection shall be provided with a motorized pinch valve. The pinch valve will only open if the card reader signals an approved vendor.

C. Control panel shall be suitable for outdoor, mounting on concrete. 480V primary control panel shall be NEMA 4X enclosure with 304 stainless steel construction. Panel shall be supplied with control switches, indicating lights, relay logic, and dry contact SCADA interfaces as indicated for each panel on the Process and Instrumentation Diagrams (P&ID) contract drawings and as specified under Division 16 and 17 of the specifications. In addition, panel shall be suitable for floor mounting with the following electrical components to provide proper operation of the equipment. Panel shall include:

1. Main disconnect with through door interlock handle
2. Step down control transformer
3. Branch circuit protection
4. Motor starter, soft start w/ overload (drum motor)
5. Motor starter, reversing w/ overload (screw motor)
6. Emergency stop pushbutton
7. Hand-Off-Auto selector switches for drum and screw drive
8. Open-Close-Auto switches for screen drum and tank flush wash water electrically actuated ball valves
9. Open-Close-Auto switch for compaction zone wash water solenoid valve
10. Load monitors shall provide overload protection for drum and screw by sensing motor power factor
11. Hour meter for each motor
12. Control power on, run and fault indicating lights
13. Alarm reset pushbutton
14. Circuit breaker to power Air Quality Panel (Combustible Gas Detector Panel)
15. Alarms from Combustible Gas Detector Panel shall be monitored by Master Control Panel and used to shutdown Septage Receiving station if triggered.
16. The manufacturer shall provide a programmable logic controller (PLC) with local operator interface (OI) to monitor and control the screen, aerated grit unit and grit classifier. The PLC shall be Allen-Bradley (AB) Micro850 with Ethernet and required I/O. Operator Interface (OI) Unit shall be Allen Bradley PanelView 800 with 4-inch color LCD touch screen.

    a. The PLC shall be fully programmable to reflect the specifics of the Septage Receiving Station (screen, aerated grit tank, and grit classifier units). Setup shall provide a user-friendly graphic interface to display information.

b. The Septage Receiving Station Supplier shall provide the PLC ladder logic programs and OI graphic configuration on electronic files to the County, along with all relevant PLC addresses to enable the future SCADA system to monitor the Screening system remotely.

c. The PLC shall be sized with all I/O points necessary for a complete operating system, with an additional 20 percent I/O points of each type of I/O as spares.

d. All PLC software, including graphics, configuration and applications ladder logic programming software shall be licensed directly to and become the sole property of the City for their use on this and future City projects. Software listed as proprietary will be rejected.

e. Local Operator Interface shall have screens developed to allow full manual or automatic monitoring and control of the equipment supplied, including:

1) All Alarm conditions.

2) Timers, and setpoints.

3) Status of all equipment

4) Inlet tank high level.

5) Trends for all analog inputs.

f. No passwords shall be enabled on PLC or OI software or hardware developed for this project. All electronic copies provided to Owner shall not have any password protection enabled on them or the software.

g. PLC with OI shall be mounted inside the control panel.

17. Ethernet Switch, 5 Port, (unmanaged).

18. Run and alarm auxiliary contacts for use by the customer

19. Intrinsically safe relay for level sensor

20. Panel Heater, with Thermostat

21. UL508A

22. The following devices will be added to the screen control panel for operation of the aerated grit removal unit:

a. Branch circuit protection.

b. Blower, horizontal and inclined grit screw drive motor starters (IEC).

c. Horizontal grit screw, inclined grit screw and compaction flush H-O-A switches.

d. Load monitors for overload protection of each grit screw motor.

e. Emergency stop pushbutton.

f. Run indicating lights.

g. Alarm lights indicating overcurrent and starter overload.

h. Run and alarm auxiliary contacts.

23. The following shall be added to the screen control panel for operation of the grit classifier unit:

a. Main disconnect with through door interlock handle.

b. Control transformer 480/120.

c. Branch circuit protection.

d. Agitator motor starter (IEC) with overload.

e. Grit screw motor starter (IEC) with overload.

f. Load monitor for grit screw motor overtorque/overload protection.

g. Emergency stop pushbutton.

h. Hour meter for each motor.

i. Run indicating lights.

j. Alarm lights indicating overcurrent and starter overload.

k. Alarm reset pushbutton.

l. Grit bed level controller.

m. Run and alarm auxiliary contacts

n. Classifier shall be controlled with main control panel PLC.

24. Remote analog signals for the following:

a. Per Contract Drawing P&ID

25. Flashing alarm light and alarm horn with silencer-reset button.

26. The manufacturer shall coordinate the function of the control panel with all related equipment, including screens and washer/compactors, all of which shall be controlled from the screen control panel.

27. The Contractor shall provide all wiring, conduit, disconnects, and accessory items between the control panel and the screen.

D. Screen Devices

1. Motor Cut-out Switch: One (1) interlock switch suitable for the area classification shall be factory mounted to the compaction/discharge zone access door. Interlock switch shall prevent operation of the screen while the door is open.
2. Electrically Actuated Ball Valves: Provide two (2) electrically actuated full port 316 stainless steel ball valve to control flow to the drum spray wash and tank flush assemblies. The full port ball valve shall be 2-piece body, threaded ends, cast body from CF8M, 316 stainless steel, ball and stem from 316 stainless steel, and RTFE seats. Each valve shall be controlled by a NEMA 7 electric actuator with a housing from cast aluminum with thermally bonded polyester power coating, stainless steel output shaft, stainless steel fasteners, 120 volt, single phase, 60 Hz, two SPDT limit switches, and visual indication on valve position.
3. Solenoid Valve: Provide one (1) NEMA 7 solenoid valve to control flow to the compaction zone spray wash assembly. Valve shall have a brass body. Valve shall be 120 volt, single phase, 60 Hz.
4. Level Control: Provide one (1) non-contacting radar transmitter for operation of the unit by screen start level and high level. Unit shall not be affected by FOG, debris or foam. The radar unit shall provide a 4-20mA level signal and be rated for installation in a Class 1, Div. 1/Div. 2 area when using an intrinsically safe circuit. The sensor shall be supplied with 33 feet of integral cable.
5. One (1) 4-inch inlet pinch-type valve for controlling flow into the unit. Pinch valve to be Red Valve Type A, full port design with cast iron body, ANSI Class 125/150 flanges and Buna-N elastomers. One (1) ½-inch 3-way brass body solenoid valve to control pinch valve operation, suitable for 120 VAC operation with electrical rating as noted in subsection 1.5.D.1 (Shipped loose)
6. One (1) ABB 4-inch Flow meter, Hard Rubber liner, Hastelloy C-4 measuring electrodes, carbon steel Class 150 ANSI flanges, stainless steel grounding rings, ½-inch NPT conduit entry, HART, 20mA, or Pulse output signal types, suitable for a Class I, Division 2 hazardous environment with integral mount transmitter. (Shipped loose).

E. Aerated Grit Chamber Devices

1. Motor Cut-out Switch: 120-volt interlock switch, suitable for hazardous area classification, shall be factory mounted to the grit tank access door. Interlock switch shall prevent operation of the unit while the door is open.
2. Local Emergency Stop: Provide a local emergency stop push button in a NEMA 4X 304 stainless steel enclosure with sealed contacts for hazardous area classification (Class 1, Division 2).

F. Grit Classifier Devices

1. Solenoid Valve: One (1) 1 inch NPT solenoid valve shall be provided to control flow to the grit bed washing assembly. The brass body valve shall be 120 Volt, single phase, 60 Hz with a NEMA 4X housing.
2. Grit Bed Level Sensor: A hydrostatic membrane pressure sensor shall be provided to control grit bed height. Sensor shall be factory mounted and calibrated. Sensing cell receiver shall be steel with the measuring cell in contact with the material being ceramic. Housed in a module package of Delrin. Output 4-20 mA, loop powered with 24 VDC.
3. Local Emergency Stop: Provide a local emergency stop push button in a NEMA 4X 304 stainless steel enclosure with sealed contacts for hazardous area classification (Class 1, Division 2).

2.4 HAULER STATION WITH KEYPAD ACCESS

A hauler station shall be located close to the hook-up point for the hauler. The hauler station shall consist of the following features:

A. A control panel shall be suitable for outdoor mounting and capable of operating with ambient air conditions to 115 ºF. Enclosure shall be NEMA 4X stainless steel with instrument front cover, full window, lockable door latch, and shall contain the Operator Interface, printer, card reader, E-Stop, pH meters and associated devices for a complete and operable system. Enclosure shall have climate control units, as necessary for outdoor exposure.

B. A magnetic inductive flow meter for the incoming flow shall be provided by the supplier of the unit and shall be installed by the Contractor in the primary incoming pipe. Flow meter shall be per specification section 16970. Components shall be rated for Class 1, Division 2 area. Flowmeter electronics shall be field mounted.

C. A pH meter for the primary incoming flow shall be provided by the supplier of the unit and shall be installed by the Contractor in the grit chamber effluent pipe. The pH meter shall have 4-20 mA signal. Meter to be manufactured by Foxboro, model 875, to match existing Onwer Standard. The meter shall have bypass/override capabilities, only changeable with Operation's Staff password (for improperly maintained probe, still requiring influent). The override shall only be allowable from Operators with specific access, no Hauler shall have access to override pH meter.

D. Hand held pH Meter - probe is hand held, the analyzer is located in the hauler control panel (behind the panel).

E. Provide sunshields for all the in-line pH meter and flowmeter electronics.

F. Hauler Access Panel shall include the following components:

1. Power Required: 120VAC, 5A
2. Enclosure, NEMA 4X 304 Stainless Steel, 24” x 24”, with interior door and sub-panel
3. Heavy Duty Key Lockable enclosure handle, with 3 Point door mechanism
4. Panel Heater Kit, Heavy Duty with Thermostat
5. Keypad, Stainless Steel, USB Type.
6. Magnetic card swipe with 100 magnetic cards.
7. User Display, Stainless Steel Bezel, Full Color, 1000 NIT Brightness.
8. Thermal Printer, Large Capacity paper roll and feeder, with illuminated print done chute.
9. Power Supply, 24 VDC.
10. Communication Controller, Solid State Storage, Dual LAN.
11. Local I/O Control as required.
12. UL Label, Industrial Control Assembly.
    a. Septage Receiving In-line pH
    b. Septage Receiving pH (hand held)
    c. Septage Receiving Flow
    d. Septage Receiving inlet valve status
    e. Septage Receiving LEL reading

G. The manufacturer shall provide a secured Hauler Access Station that shall identify waste haulers and be configurable to interface with associated equipment such as doors, gates, valves, samplers, and screens & washers.

H. Hauler access shall be established using a keypad or magnetic-stripe card.

I. The Hauler Access Station shall be constructed with an outer door that can be closed to enable a wash down of the area without damaging the internal mounted devices.

J. The hauler can access the station by opening the door to the enclosure and entering a truck ID number using the keypad or by using an assigned card.

K. If additional security measures are required by the facility, haulers shall use an additional card or pin number to access the front gate or door of the facility.

L. The Hauler Access Station shall include a daylight visible display and outdoor-rated robust keypad. The display shall provide log-on instructions for the hauler and prompt the hauler for additional information as required.

M. The Hauler Access Station shall include a receipt printer and integral light. The printer shall quickly print and cut each receipt and the integral light shall inform the hauler that a receipt has been printed.

N. Each printed receipt shall include the following:

1. Date and Time of Transaction
2. Station ID and Ticket Number
3. Hauler ID number
4. Volume Unloaded
5. Elapsed Time
6. Alarm ID
7. Waste Type

O. The Hauler Access Station shall continue to function normally even without a network connection to the office. All hauler transaction data shall be stored in a local solid state drive. If a network connection is established, all transaction data shall be automatically synchronized and stored securely in an IT managed SQL database.

2.5 COMPUTER AND BILLING SOFTWARE

A. The included Flo-Logic management software shall be installed on a site owned PC, physical or virtual. The PC must have the appropriate network configuration to communicate with Hauler Access Station(s).

B. PC system requirements:

1. Operating System: Windows 7 or later / Windows Server 2008 R2 or newer
2. CPU: Intel Core i5, 2.4 GHz, minimum
3. RAM: 8 GB, minimum
4. Storage: 15 GB, minimum
5. Network: 1 Gbps / 100 Mbps Ethernet connection
6. Cloud Service requirement (if used):
    a. Public static IP address
    b. 10 Mbps or higher bandwidth

C. The software shall be web based with unlimited users, utilizing Microsoft Internet Information Services (IIS). Recommended web browsers: Google Chrome, Mozilla Firefox.

D. The software shall monitor the Hauler Access Station(s) and automatically upload hauler transaction data to the networked PC.

E. An unlimited number of users shall have access to the Flo-Logic web interface for hauler and data management.

F. The data from each hauler transaction shall be collected and stored in a secure SQL database. The following data shall be collected:

1. Site ID
2. Station ID
3. Ticket Number
4. Hauler ID
5. Date and Time of Transaction
6. Volume Unloaded
7. Additional Process Analyzer Data (if configured)
8. Product Type ID
9. Alarm ID
10. Five (5) additional fields will be available for the administrator to define

G. The software shall be used to configure the hauler's PIN used at the Hauler Access Station(s).

H. The software shall be used to configure scalable devices communicating with the Hauler Access Station(s), such as: flow meters, pH analyzers, conductivity sensors, acoustic sensors, and others.

I. The software shall allow the facility to periodically initiate an automatic sampler. Samples can be taken automatically for each transaction or periodically for selected trucks. The software will collect data to show specifically which loads were sampled.

J. A user-friendly interface shall be provided to allow the facility to view hauler transaction data and enter/edit information when necessary. The software shall have a built in sorting tool that allows the user to create multiple data views. The software shall have a "Main Screen" view that displays all transaction data divided into the following sections:

1. Transaction Log
2. Customers
3. Truck Status
4. Customer Balances
5. Link to Reports

K. The software shall allow the facility to define the Hauler Access Station's operating time schedule. If the station is closed, a message will alert the hauler that the station is closed.

L. Customer (Hauler) and Truck Features:

1. The software shall allow the facility to create a list of customers that will be billed for use of the Hauler Access Station(s). The software shall not limit the facility as to the number of customer accounts that can be created.
2. The software shall allow the facility to create multiple truck accounts and link these accounts to the corresponding customers. The software shall not limit the facility as to the number of trucks that can be assigned to each customer.
3. The facility shall be able to enter customer ID numbers, pin numbers, and details regarding the truck including capacity, weight, and vehicle information into the system.
4. Each customer shall receive a Hauler ID number and 4-digit PIN number for each truck. PIN number assignment can be unique per owned truck or common to all owned trucks, depending on the facility and customer preference. The software shall auto-generate customer PIN numbers or shall allow the administrator to manually assign pin numbers to customers.
5. The software shall allow the facility to enable or disable a truck's access privilege. Once disabled, a hauler's access will immediately be denied at all sites. A message shall be displayed at log-in at the hauler station informing the hauler to contact the office.

M. Waste Type Features:

1. The software shall allow the facility to define a list of permitted waste types and an associated rate to be charged per 1000 units of waste unloaded. The software shall allow the facility to define these units. (Gallons, Liters, etc…) The facility shall also be able to set different rates for the same waste type. (Ex. Charging In-county customer vs. out-of-county customer).
2. When accessing the station, the customer shall be prompted at log-in to identify the waste type that shall be unloaded.

N. Status and Alarm Features:

1. The software shall allow the facility to monitor the Hauler Access Station in real-time. The facility shall be able to monitor the current customers/trucks total flow, waste types, valve status, equipment faults, and additional user-defined variables.
2. The software shall allow the facility to monitor alarms at the Hauler Access Station. Alarms make the station unusable or may prevent a hauler from unloading. These alarms include:

    a. E-Stop pressed

    b. Printer Low on Paper

    c. Equipment Fault

    d. Storage Tank at High Level

    e. Optional User-Defined Alarm (20 Available)

O. Reporting, Billing, and Payment Features:

1. The software shall allow the facility to manage each customer on a debit or credit basis. The facility shall choose whether customers shall pay prior to using the Hauler Access Station or after.
2. The software shall debit account balances automatically and auto-deactivate the truck's access privilege should the customer's balance drop below the set minimum. The facility shall be able to set the minimum.
3. The software shall allow the facility to bill on a truck capacity basis, a metered basis (flow-meter or scale), or by manual entry.
4. The software shall allow the facility to enter payments if required. The total balance shall automatically recalculate once a payment is applied. A customer's account that is deactivated shall be automatically reactivated once money is received.
5. The facility shall be able to use the features of the software to substantiate the data recorded from each transaction and accurately calculate the total cost on a per customer basis.
6. The software shall have multiple pre-formatted reports that will, at a minimum, show activity with daily totals, statements, customer and truck usage. The software shall also allow the facility to generate billing statements that can be exported for accounting use. The reports and billing statements shall be easily exported into PDF, CSV, XLS, and other formats.

2.6 COMBUSTIBLE GAS DETECTOR PANEL

A combustible gas detector panel shall be located close to the Septage receiving station to detect the LEL level (0-100%) of the enclosed Septage tank. The LEL Detector Panel shall consist of the following features:

A. A Control panel shall be suitable for outdoor mounting. Enclosure shall be NEMA 4X stainless steel with padlockable door latch, and shall contain the combustible gas (LEL) detector, air pump and associated devices for a complete and operable system. Air pump and LEL detector shall be mounted on backpan. LEL display and keypad shall be accessible through deadfront door. Outlet air shall be exhausted out of panel with a bulkhead fitting.

B. Weatherproof Flashing red alarm strobe light with silencer-reset button mounted on deadfront door.

C. Convenience GFI receptacle located on deadfront door.

D. The combustible gas monitor (LEL) shall detect the presence of gases below the range of the lower explosive limit (LEL). Unit shall have internal trouble monitor, high alarm relay output, 4-20mA output of LEL range (0-100%) and LCD display of LEL. LEL unit shall be MSA Instruments Ultima XA gas monitor with associated devices or approved equal.

E. LEL monitor shall be provided with sampling module to draw gas sample from Septage tank to LEL monitor. Module shall consist of pump, low flow indicator and low flow relay output.

F. Provide universal calibrator for remote calibration of unit.

G. Provide all necessary power supply modules, filters, flow caps, calibration valves, stainless steel air tubing and relays for a complete and operational system.

2.7 ANCHOR BOLTS

The septage receiving station manufacturer shall furnish 316 stainless steel anchor bolts. Provide seismic and wind calculations shall be in accordance with Section 01610 and 01615.

2.8 SPARE PARTS

A. The following spare parts shall be provided as the total amount of spare parts for this equipment.

1. One (1) complete solenoid valve assembly.
2. One (1) solenoid valve re-build kit
3. One (1) complete grit washer agitator motor/impeller mounting hardware.
4. One (1) screen lower bearing assembly with wear sleeve and seals.
5. One (1) horizontal grit screw tail bearing.
6. One (1) grit dewatering screw tail bearing.
7. Three (3) spare fuse sets of each size and type.
8. Hauler station receipt printer paper, enough for one year supply of receipts (equivalent to 1,500 printed receipts).
9. Hauler station ID cards, 100 supply.
10. Three (3) relays with bases for each type of relays.
11. One (1) timer with base for each type of timer, as applicable

B. Spare parts shall be individually boxed with the project name and part number clearly identified on each individual box. All spare parts shall be shipped in a separate crate and clearly labeled. Spare parts shall be stored indoors by the Contractor in a temperature-controlled environment.

2.9 FACTORY ASSEMBLY, TESTING AND INSPECTION

The septage receiving station shall be factory assembled and tested for a minimum of four (4) hours prior to delivery, and shall be delivered to the site fully assembled to the extent possible for shipping (other than the motor/reducer unit, discharge chute and supports). It shall be capable of being set in place and field erected by the Contractor with minimal field assembly.

2.10 INSTALLATION, OPERATION AND MAINTENANCE MANUAL

In addition to the normal Installation, Operation and Maintenance manuals required by contract, a spare manual will be shipped with the unit in order to allow for proper operation of equipment prior to release of all final Installation, Operation and Maintenance Manuals to the end user.

2.11 COATING, PAINTING, AND PASSIVATION

Non-stainless steel parts shall be cleaned, primed and coated in accordance with Section 09900. Motors and gear reducers shall be painted the same color. All stainless steel shall be passivated after fabrication. Factory coated equipment shall be repainted in the field as specified in section 09900.

1. All stainless-steel parts/equipment, after its fabrication, shall undergo a passivation (pickling) process to ensure maximum resistance to corrosion and to remove all embedded iron and heat tint, as defined in subsection 2.2 above.

PART 3 EXECUTION

3.1 INSTALLATION

A. The equipment shall be installed in conformance with the manufacturer's instructions. The manufacturer's service technician shall thoroughly check and inspect equipment after installation, initiate testing, make necessary adjustments, and instruct owner's personnel in proper operating and maintenance procedures. Four (4) days consisting of six (6) hours per day by the manufacturer's service technician shall be allotted for this purpose. Additional days, if required, will be paid by the Owner for a nominal rate. Sales representatives will not be deemed acceptable in lieu of a factory-employed service technician.

B. Equipment shall demonstrate compliance with the specifications and shall operate to the satisfaction of the Owner under actual operating conditions.

END OF SECTION

SECTION 15010

GENERAL PROCESS AND ONSITE UTILITY PIPING PROVISIONS

PART 1 GENERAL

1.1 SCOPE

This section contains general provisions applicable to all process and onsite utility piping. Specific requirements for each type of pipe to be used are provided in other sections of Division 15. Where specific requirements for a particular type of pipe are different than those in this section, the specific requirements shall govern.

1.2 RELATED WORK IN OTHER SECTIONS

A. Section 01300 - Submittals

B. Section 01656 - Disinfection of Pipelines

C. Section 01666 - Testing of Pipelines

D. Section 02223 - Trenching, Backfilling, and Compacting

E. Section 10400 - Identifying Devices

F. Section 15080 - Piping Accessories and Appurtenances

G. Section 15094 - Hangers and Supports

H. Section 15100 - Valves

I. Section 1540 - Plumbing

1.3 DRAWINGS

Drawings are diagrammatic and show the general design, arrangement and extent of the systems. Do not scale drawings for roughing in measurements, nor use as shop drawings. Make field measurements and prepare shop drawings as required. Coordinate work with shop drawings of

other specification divisions.

1.4 SUBMITTALS

In accordance with Section 01300.

A. Submittals shall be provided for the following items plus any additional items required in the specifications for the particular types of pipe:

1. Piping and jointing materials
2. Fittings
3. Specialties
4. Fabrication drawings of all major runs of pipe and all pipe which cannot be fabricated in the field.
5. The arrangement of piping and appurtenances proposed to serve equipment of other than the first named manufacturer.

B. Contractor shall investigate the space requirements of the proposed piping before submitting shop drawings.

PART 2 MATERIALS

2.1 GENERAL

Pipe sizes are minimum nominal inside diameter unless otherwise noted. All sizes of pipe shall be as called out on the drawings and specified herein. All pipe and fittings delivered to the job site shall be clearly marked to identify the material, class, thickness, and manufacturer. All material shall be new and free of blemishes.

2.2 PIPING MATERIALS

A. The Piping Materials Schedule lists the pipe materials that can be selected at the Contractor's option for each service, except where the drawings call for a specific pipe material. For any service not listed in the schedule, the pipe material shall be as allowed for a similar or connecting service of the same size.

B. The Piping Materials Legend lists the pipe types and specification sections for the piping referred to by symbols in the Piping Materials Schedule.

PIPING MATERIALS SCHEDULE

Symbol	Service	Material (d)		Pipe ID Code (a)	Test Pressure PSI (b)
		Underground or Encased (j)	Exposed		
PW	Non-Potable Plant Water	I (3-inches or less) (e) X (4-inches or greater) (e)	F (3-inches or less), A (4-inches or greater)	3	125
D	Drain	I (3-inches or less), X (4-inches or greater)	F (3-inches or less), A (4-inches or greater) (l)	3	10
IA	Instrument Air	S, TT	S, TT	3	150
RS	Raw Sewage (gravity)	N/A	A (l)	2	30
V	Vent	J	F	3	10

(a) See Section 10400.

(b) See Section 01666.

(c) Required in filter pump room gallery

(d) Piping schedule lists all piping materials used unless otherwise shown on the drawings. Use dielectric fittings for dissimilar metals, in accordance with Section 15080.

(e) Piping system shall be restrained.

(f) reserved

(g) reserved

(h) reserved.

(i) reserved

(j) All pipes below slabs shall be concrete encased, in accordance with Typical Detail S240. All pipes with less than 36-inches of cover shall be concrete encased, in accordance with Typical Detail S240.

(k) insulate pipe in accordance with spec section 15082.

(l) Specialty lining- raw sewage, septage and septage drain ductile iron piping and fittings shall be lined with Protecto 401.

PIPING MATERIALS LEGEND [(a)]

Symbol	Description	Specification Section
A	Ductile Iron	15062
AA	Black Steel Schedule 10 W High Temp Insulation	15062
B	Black Steel, Schedule 40	15051
BB	Black Steel, Pre Insulated	15051
C	Black Steel, Schedule 80	15051
CC	Double Contained Fuel pipe	15073
E	Black Steel, Schedule 40 Polyethylene Tape Wrap	15051
F	Schedule 40 Steel, Galvanized	15051
G	Copper Pipe	15031
H	C900 PVC, SDR 18 or C905 SDR 25	15071
I	Schedule 80 PVC	15071
J	Schedule 40 PVC	15071
K	AWWA C200, Cement Mortar Lined and Tape Coated Steel	15051
L	AWWA C200, Cement Mortar Lined and Coated Steel (a)	15051
M	AWWA C200, Fusion Epoxy Lined and Coated Steel	15051
N	Reinforced Concrete Pipe ASTM C76 (Unlined)	15041
NN	Reinforced Concrete Pipe ASTM C76 (T-Lock Lined)	15041
O	Reinforced Concrete Pipe ASTM C361	15041
P	Ductile Iron Glass Lined	15062
Q	304L Stainless Steel Pipe Schedule 10s	15052
R	316L Stainless Steel Pipe Schedule10s	15052
RR	Stainless Steel Tubing 316L	15052
S	Stainless Steel Pipe (304L) Schedule 40s	15052
SS	Flexible Stainless Steel Hose	15052
T	Braided Vinyl PVC Tubing in Conduit	15071
TT	Polyethylene Tubing in Conduit	15071
U	High Density Polyethylene Pipe (HDPE)	15071
UU	Rigid Fiberglass Ductwork	15831
V	PVC Sewer Pipe, SDR 26 and 35	15071
W	Corrugated Metal Pipe	02618
X	Restrained Joint PVC Pipe, C900 DR 18 or C905 DR 25	15071
Y	CPVC Schedule 80	15071
Z	ABS Vent Piping	15071

(a) Pipes 12-inches and under shall be Schedule 40 wall thickness unless noted otherwise.

2.3 MISCELLANEOUS SMALL BUILDING PIPING

A. Distilled Water (DI) Piping shall be high purity schedule 80 polypropylene piping.

B. Air Conditioning Piping

1. Air conditioning condensate piping shall be type "M" copper with plugged tees for cleanouts. Male threads on plugs shall be wrapped with Teflon tape prior to threading into tees.

2. Refrigerant Piping shall be ACR refrigeration hard tempered tubing cleaned and capped with wrought copper fittings.

3. Joints to be made with silfos and flux as recommended by the brazing alloy manufacturer. During brazing the pipe and fittings shall be kept full of an inert gas, dry nitrogen, or CO2, to prevent formation of scale.

2.4 POLYETHYLENE ENCASEMENT

All buried metallic piping, valves, specials, and fittings shall be polyethylene cased, double wrapped – 8 mils thickness, sized to pipe diameter, ANSI/AWWA-C105/A21.5. Ends taped off with vinyl pipe wrap tape 10-mil vinyl tape manufactured by Calpico Inc. (Calpico VI-10) or equal.

Polyethylene Encasement- "Clear" non-colored polyethylene film, in either tubular or sheet form. The polyethylene film shall have a minimum thickness of 8 mils and at no point shall not be less than 10 percent of the nominal thickness. Polyethylene film shall be manufactured from a Type 1, Class A raw polyethylene material conforming to "Polyethylene Encasement for Ductile-Iron Piping for Water and Other Liquids" (ANSI/AWWA C-105/A21.5). Manufactured by Fee Spec's-LP378D Northtown, Fulton Enterprise Inc., Global Polymer Tech, Unisource, or equal.

PART 3 EXECUTION

3.1 HAULING, UNLOADING AND DISTRIBUTING PIPE

A. During loading, transportation and unloading, every precaution shall be taken to prevent injury to the pipe, coating, and lining. No pipe shall be dropped from cars or trucks, or allowed to roll down slides without proper retaining ropes. Each pipe shall rest on suitable pads, strips, skids or blocks securely wedged or tied in place. Padding shall be used on car or truck stakes, skids, etc., to prevent damage to the pipe during transportation and handling. Any pipe damaged shall be replaced or repaired as approved by the Engineer at no additional cost to the Owner.

B. Each section of pipe shall be delivered in the field as near as practicable to the place where it is to be installed. Pipes shall be distributed along the side of trench opposite to the spoil bank within easy reach of the installing crew.

C. Where it is necessary to move the pipe longitudinally along the trench, it shall be done in such a manner as not to injure the pipe. Pipe shall not be rolled or dragged on the ground. Where pipe is placed on stockpiles, it shall be neatly piled and blocked with strips between tiers.

3.2 INSTALLATION OF PIPELINES AND FITTINGS

A. Trenching and Backfill:

1. Except as otherwise noted on the plans or specified herein, all excavation and backfilling for piping shall be as specified in Section 02223, "Trenching, Backfilling, and Compacting".

2. Pipelines located in or under fill areas shall not be placed until the fill has been constructed and compacted to an elevation at least one (1) foot above the elevation of the top of the pipe.

3. All backfill other than where concrete encasement is required, for pipe lines installed under structures, slabs, footings, and paving shall be made with sand and fine gravel, thoroughly compacted in place to not less than 95% of maximum density.

B. Grades and Elevations:

1. All piping and appurtenances shall be installed in the position and to accurate lines, elevations, and grades as shown on the plans or specified herein. Where possible, piping shall be sloped to permit complete drainage. All pipelines shall be rigidly supported and braced by approved hangers, brackets, or other devices. When temporary supports are used, they shall be sufficiently rigid to prevent any shifting or distortion of the piping or related work. See Specification Section 15094.

2. Furnish all fittings necessary for the satisfactory alignment and arrangement of piping and all necessary unions and cleanouts.

3. An invert grade rod shall be used in laying all lines below ground.

C. Flexible Couplings:

1. Flexible couplings shall be installed where shown on the drawings and at such other points as may be required for ease of installation or removal of the pipe, subject to approval of the Engineer. Where necessary to prevent separation of pipe due to internal pressures, flexible couplings shall be of the type with set screws in the retainer gland or shall be provided with tie rods as approved by the Engineer. Where permanent flexibility is required, however, such as at connections to pumps or other equipment, and elsewhere as called for on the drawings, tie rods shall be the only

acceptable restraining devices and shall be installed through separate mounting plates or lugs and not through flange bolt holes, in order to retain flexibility.

2. Where rubber or similar flexible couplings are called for on the Drawings, tie rods shall be provided if recommended by the manufacturer to prevent excessive elongation.

D. Flexible Joints: For pipelines extending from a concrete structure into earth, at least two flexible joints shall be provided in the earth within 3 feet of the structure face, one of which may be cast in structure with end flush with structure face. Piping beyond structure shall adequately supported by proper compaction under pipe or by supporting on firm undisturbed soil if necessary.

E. Union and Flanges:

1. In erecting the pipe, a sufficient number of screwed unions or flanged joints shall be used to allow any sections or runs of pipe to be disconnected without taking down adjacent runs. Screwed unions shall be used on pipelines two and one-half (2-1/2) inches in diameter and smaller. Flanged joints shall be employed in pipelines three (3) inches in diameter and larger.

2. All exposed piping shall be provided with rigid joints as necessary to prevent shifting or separation due to internal pressures, seismic forces, or the weight of the pipe and it's contents. Rigid joints shall include flanges, grooved couplings, screwed joints, welded joints, soldered joints, etc., unless otherwise noted on the drawings.

F. Concrete Thrust Blocks: Unless noted otherwise, concrete thrust blocks shall not be allowed.

G. Concrete Wall and Slab Penetrations:

1. Hydraulic Conditions - Piping passing through concrete walls normally below liquid level shall be installed with one of the following:

a. Cut-off collar cast on ductile iron fittings or pipe, ¼-inch thick, 3-inches wide.

b. Cut-off collar welded to steel fittings or pipe, ¼-inch thick, 3-inches wide.

c. Cored, canned or sleeved hole 3-inches to 7-inches larger diameter than pipe; pack with non-shrink grout.

d. Cored, canned, or sleeved hole of suitable size to be sealed with a modular mechanical interlocking EPDM synthetic rubber links shaped to continuously fill the annular space between pipe and opening, equal to "Link-Seal" by Thunderline Corp., Wayne, MI.

2. Non-Hydraulic Conditions -

a. Piping passing through concrete walls, slabs, or footings from earth to earth shall have provision for reasonable relative movement by wrapping pipe with one-inch fiberglass entire thickness of concrete.

b. Horizontal or vertical piping passing through concrete walls, sidewalks, slabs, or footings from earth to air shall be wrapped with 3/8-inch thick, 60 durometer, rubber sheeting, secured with banding.

H. Connections to Equipment:

1. The pipework of all pumps and equipment shall be adequately supported throughout and the weight thereof shall be carried independently of the pump casings or the equipment. All pipework shall be mounted parallel with vertical and horizontal axes of reference. All sections of pipe shall be rigidly bolted or joined together after being cut accurately to length in such a manner as to relieve any and all parts of equipment of undue strain resulting from closure of flanged or other joints or connections.

2. Equipment shall be so positioned and aligned that no strain shall be induced within the equipment during or subsequent to the installation of pipework.

I. Pipe Joints:

1. Pipe shall be cleaned of dirt and scale prior to installation and all joints swabbed clean before jointing. Ends of all pipe shall be closed or plugged at the end of each day's work or otherwise as necessary to prevent the entrance of foreign materials.

2. The Contractor shall perform all work of cutting pipe and special castings necessary to the assembly, erection and completion of the work. All pipe shall be cut and reamed to fit accurately with smooth edges.

J. Coatings for Buried Valves and Piping Accessories: All buried valves, flange assemblies, flexible connections, flange coupling adapters and similar fittings shall be coated with petrolatum wax tape. All buried nuts, bolts, washers, tie rods, and other threaded fasteners shall be Type 316 stainless steel.

3.3 IDENTIFICATION:

See Section 10400.

3.4 TESTING:

See Section 01666.

3.5 CLEANING AND FLUSHING

A. All pipelines shall be cleaned of all soil, dirt, rocks, and other debris and objectionable material.

B. Pipelines 24-inches in diameter and smaller shall be cleaned first by pulling a tightly fitting cleaning ball or swab through the pipe. Pipelines larger than 24-inches in diameter may be cleaned manually or with a cleaning ball or swab.

C. After initial cleaning, flush the interior of all piping. Upon completion of flushing, completely drain systems at all low points; remove, clean, and replace all strainer baskets and refill systems.

3.6 DISINFECTION:

See Section 01656.

END OF SECTION

SECTION 15052

STAINLESS STEEL PIPE

PART 1 GENERAL

1.1 DESCRIPTION

The work of this section consists of furnishing materials and constructing therewith new stainless-steel pipe, tubing, and fittings 30-inches in diameter and smaller.

A. Pipe shall conform to ASTM A312.

B. Stainless steel tubing shall be as specified in Part 2.15.

1.2 RELATED WORK ELSEWHERE

A. Section 01300 - Submittals

B. Section 01666 - Testing of Pipelines

C. Section 02223 - Trenching, Backfilling, and Compacting

D. Section 09900 - Painting

E. Section 11010 - General Mechanical Equipment Provisions

F. Section 15010 - General Process and Onsite Utility Piping Provisions

G. Section 15080 - Piping Accessories and Appurtenances

H. Section 15094 - Hangers and Supports

1.3 QUALITY ASSURANCE

Standards, American Society for Testing and Materials (ASTM), American Water Works Association (AWWA), American National Standards Institute (ANSI), American Iron and Steel Institute (AISI), and American Welding Society (AWS).

1.4 SUBMITTALS

A. Submit shop drawings in accordance with Section 01300.

B. Show materials of construction, with ASTM reference and grade. Submit manufacturer's certificates of compliance with referenced pipe standards, e.g., ASTM A312, A403, A774, A778. Show wall thickness of steel cylinder and fittings.

C. Submit piping layout drawings showing the location and dimensions of the pipe and fittings larger than 2.5 inches nominal diameter. Include layout lengths of valves, meters, blowers, and other equipment determining piping dimensions. Label or number each fitting or piece of pipe.

D. Submit manufacturer's data for flange and coupling gaskets.

E. Submit certifications that welders are qualified in accordance with ANSI B31.1, Paragraph 127.5 for shop and project site welding of pipe work.

PART 2 MATERIALS

2.1 PIPE

Pipe shall conform to ASTM A312 or A778, Grade 304L or Grade 316 as indicated in the Drawings and/or Specifications. If not indicated, use Grade 304L. Pipe sizes and wall thickness shall conform to ANSI B36.19. Pipe 2.5 inches nominal diameter and smaller shall be Schedule 40S. Pipe 3 inches nominal diameter and larger shall be Schedule 10S.

2.2 FITTINGS

A. Fittings 2.5 inches and smaller shall be threaded conforming to ANSI B16.11, 3,000-pound CWP. Material for threaded fittings shall conform to ASTM A403, Class WP, same material as connecting pipe.

B. Fittings for buried or submerged pipe larger than 2.5 inches shall be butt-welded, conforming to ASTM 403, Class WP same material and wall thickness as the connecting piping, conforming to ANSI B16.9. Elbows shall be short radius.

C. Fittings for aboveground or exposed pipe larger than 2.5 inches shall be butt-welded, grooved, or flanged, conforming to ASTM A403, Class WP same material and wall thickness as the connecting piping, conforming to ANSI B16.9. Elbows shall be short radius.

2.3 JOINTS

A. Joints for pipes 2.5 inches and smaller shall be threaded, same material as specified for fittings, 3,000-pound WOG, conforming to ANSI B16.11.

B. Joints for buried pipe larger than 2.5 inches shall be butt-welded or flexible grooved, unless noted otherwise on drawings.

C. Joints for aboveground or exposed pipe larger than 2.5 inches shall be rigid grooved end or flanged. Grooved-end joints shall be of the roll-grooved type.

D. Stainless steel pipe fabricated into spool pieces shall have shop-welded circumferential butt-weld joints or flanges.

2.4 GROOVED-END COUPLINGS

A. Grooved-end or split type couplings shall be the same material as the pipe. . The pipe ends shall be roll-grooved to the coupling manufacturer's specifications. Where roll grooving is impractical, the pipe shall have heavy-wall machine-grooved pipe nipples or machined ring collars fully welded to the pipe or fitting. Nipples shall be taper-bored to the I.D. of the adjoining pipe to allow full-weld penetration. Collars shall be welded on both sides to the piping. Nipples and collars shall be of the same alloy as the piping.

B. Bolts in exposed service shall conform to ASTM A193, Grade B8M, Class 2.

2.5 THREAD LUBRICANT

Use Teflon thread lubricating compound or Teflon tape.

2.6 FLANGES

Provide weld-neck flanges conforming to ANSI B16.5 for piping 2.5 inches and smaller to connect to flanged valves, fittings, or equipment. Provide weld-neck or slip-on flanges for piping larger than 2.5 inches. Flanges shall be Class 150 per ANSI B16.5. Material for weld-neck and slip-on flanges shall conform to ASTM A182, Grade F304 or F316 to match pipe type. Flanges shall match the connecting flanges on the adjacent fitting, valve, or piece of equipment. Flange shall be flat face.

Where appropriate as determined by the Engineer, flanges may be Van Stone type. Van Stone joints shall be made up of stainless steel slip-on type rolled-angle face rings and ductile iron backup flanges drilled to ANSI 16.1, Class 125 standard. The angle face ring thickness shall be equal to or greater than the wall of the pipe or fitting. The angle leg shall not interfere with the flange bolt holes. For submerged or buried joints, backup flanges shall be stainless steel plate flanges.

2.7 BOLTS AND NUTS FOR FLANGES

A. Bolts and nuts for flanges shall be stainless steel conforming to ASTM A193, Grade B8M, for bolts and ASTM A194, Grade 8M, for nuts.

B. Bolts for flange insulation kits shall conform to ASTM A 193, Grade B7. Nuts shall conform to ASTM A194, Grade 2H.

C. Provide washer for each nut. Washers shall be of the same material as the nuts.

2.8 LUBRICANT FOR STAINLESS-STEEL BOLTS AND NUTS

Lubrication shall be TRX-Synlube by Ramco, Anti-Seize by Ramco, Jusk IT Husky Lube O'Seal, or equal.

2.9 GASKETS FOR FLANGES

Gaskets shall be fullface, 1/16 inch thick. Gaskets shall be acrylic or aramid fiber bound with nitrile. Gaskets shall be Garlock "Bluegard", Klinger "Klingersill C4400", or equal. Gaskets shall be suitable for a water pressure of 500 psi at a temperature of 400 degrees Fahrenheit.

2.10 OUTLETS

A. Outlets 2.5 inches and smaller in piping 3 inches and larger shall be of the Thredolet type, per AWWA Manual M11 (1998 edition), Figure 13-23. Outlets shall be 3,000-pound WOG stainless steel per ASTM A182, Grade F304 or F316, or ASTM A403, Grade WP304 or WP316, to match pipe. Threads shall comply with ANSI B2.1. Outlets shall be Bonney Forge Co. "Thredolet", "Allied Piping Products Co. "Branchlet", or equal.

B. For outlets 2.53 inches and smaller in piping smaller than 3 inches, use a tee with a threaded outlet.

C. For outlets larger than 3 inches, use a tee. Tees, crosses, laterals and wyes shall be shop fabricated from pipe, and in addition, stainless steel reinforcement collars shall be fully welded to the branch and run of the pipe as necessary to maintain the specified pressure rating.

2.11 WALL PENETRATIONS

Wall pipes shall have integral shop welded wall stops, circumferentially welded to the pipe run.

2.12 FLEXIBLE COUPLING ASSEMBLIES

Flexible Coupling shall be provided at a minimum in the locations shown on the Contract Drawings. Couplings shall comply with the requirements of Section 15080, except that all metal parts in contact with the stainless steel piping and fitting shall also be stainless steel. Flexible Coupling shall be held in place by means of an internal centering ring or centering lugs.

2.13 FINISH

After all shop operations have been completed, pipe and fittings shall be pickled and passivated in manufacturer's plant, and scrubbed and washed until discoloration and possible iron picked up from manufacturing process are removed. The standard finish for 16-gage through 8-gage material shall be No. 1 or 2B per ASTM A480; 3/16-inch and heavier plate material shall be No. 1 mill finish or better per ASTM A480.

2.14 STAINLESS STEEL TUBING

A. General

1. Provide stainless steel tubing in sizes indicated on the Drawings.
2. Where not indicated on the Drawings, provide stainless steel tubing of the size required to perform the function intended.

B. Tubing

1. Stainless Steel Tubing: Seamless tubing made of Type 316 L or 304L stainless steel and conforming to ASTM A269.
2. Wall thickness adequate for test pressure specified, but not less than 0.065 inch for run tubing. Connections to actuators may be ¼-inch as required for flexibility.

C. Fittings

1. Fittings for Use with Stainless Steel Tubing: Swage ferrule design, with components made of Type 316 stainless steel.
    a. Fittings: Double acting ferrule design, providing both a primary seal and a secondary bearing force.
    b. Flare, bite, or compression type fittings are not acceptable.
2. Fittings: Manufacturers: One of the following or equal:
    a. Crawford Fitting Company, Swagelok.
    b. Hoke, Gyrolok.
    c. Parker, CPI.

D. Valves: Valves for Use with Stainless Steel Tubing: Air cocks of Type 316 stainless steel.

2.15 FLEXIBLE STAINLESS STEEL HOSE

A. General

1. Teflon Internal core with 304 Stainless Steel overbraid.
2. 316 Stainless steel Tube Fitting end connections compatible with SS Tubing.
3. Manufacturer: Swagelok

PART 3 EXECUTION

3.1 FABRICATION/INSTALLATION REQUIREMENTS

The piping supplier during manufacturing, fabricating and handling stages, and the Contractor during handling and installation stages, shall use extreme care to avoid the contact of any ferrous materials with the stainless steel piping. All saws, drills, files, wire brushes, etc. shall be used for stainless steel piping only. Pipe storage and fabrication racks shall be nonferrous or stainless steel or rubber-lines. Nylon slings or straps shall be used for handling stainless steel piping. Contact with ferrous items may cause rusting of iron particles embedded in the piping walls. After installation, the Contractor shall wash and rinse all foreign matter from the piping surface. All welded joints shall be treated with a pickling solution, brushed with stainless steel wire brushes and rinsed clean. If rusting of embedded iron occurs, the Contractor shall pickle the affected surface with Oakite Deoxidizer SS or equal, scrub with stainless steel brushes, and rinse clean.

3.2 MARKING, SHIPPING, AND STORAGE

All pipe, fittings, and fabrications shall be properly marked with type, gage, and heat number. All fabricated piping shall have openings plugged and flanges secured for storage and/or transport after fabrication. All fabricated piping shall be piece-marked with identifying numbers or codes which correspond to the Contractor's layout and installation drawings. The marks will be located on the spools at opposite ends and 180 degrees apart. Pipe spools shall be loaded and blocked and lagged as necessary to ensure protection from damage during shipping. Stainless steel pipe and fittings shall be stored per manufacturer's recommendation. Dents, gouges, and scratches in stainless steel pipe and fittings are not acceptable and are reason for rejecting pipe and fittings.

3.3 INSTALLING THREADED PIPING

Ream, clean, and remove burrs from threaded piping before making up joints. Apply thread lubricant to threaded ends before installing fittings, couplings, unions, or joints.

3.4 INSTALLING FLANGED PIPING

A. Set pipe with the flange bolt holes straddling the pipe horizontal and vertical centerline. Install pipe without springing, forcing, or stressing the pipe or any adjacent connecting valves or equipment.

B. Lubricate bolts prior to installation.

3.5 INSTALLING GROOVED-END PIPING

Install grooved-end pipe and fittings in accordance with the coupling manufacturer's recommendations and the following:

A. Clean loose scale, rust, oil, grease, and dirt from the pipe or fitting groove before installing coupling. Apply the coupling manufacturer's gasket lubricant to the gasket exterior including lips, pipe ends, and housing interiors.

B. Fasten coupling alternately and evenly until coupling halves are seated.

3.6 FABRICATION, ASSEMBLY, AND ERECTION

A. Beveled ends for butt-welding shall conform to ANSI B16.25. Remove slag by chipping or grinding. Surfaces shall be clean of paint, oil, rust, scale, slag, and other material detrimental to welding.

B. Fabrication shall comply with ANSI B31.3, Chapter V.

C. Welds shall be full circumferential. The minimum number of passes for welded joints shall be as follows:

Steel Cylinder Thickness (inch)	Minimum Number of Passes for Welds
Less than 0.1875	1
0.1875 through 0.25	2
Greater than 0.25	3

D. Use the shielded metal arc welding (SMAW) or the tungsten inert gas (TIG) process for welding. Use the SMAW process for any pipe. Use the TIG process only on pipe having a maximum thickness of Schedule 10S.

E. Welding preparation shall comply with ANSI B31.3, paragraph 328.4. Limitations on imperfections in welds shall conform to the requirements in ANSI B31.3, Tables 341.3.2A and 341.3.2B, and paragraph 341.4 for visual examination.

F. Identify welds in accordance with ANSI B31.3, paragraph 328.5.

G. Major piping assemblies shall be shop fabricated. Field welding of above ground piping shall be permitted only where indicated on the Contract Drawings or deemed necessary by the Engineer. No field welding will be allowed within the limits of the aeration basin, per Section 11378.

3.7 INSTALLING BURIED PIPE

Install in accordance with Section 02223, except as modified herewith. Pipe installed underground shall not deviate more than 1 inch from line or ¼ inch from grade. Measure for grade at the pipe invert.

3.8 INSTALLING ABOVEGROUND PIPE AND TUBING

A. Install pipe without springing, forcing, or stressing the pipe or any adjacent connecting valves or equipment.

B. Provide pipe hangars and supports as identified in the drawings.

C. Install tubing fittings in strict conformance with manufacturer's recommendations.

3.9 SUBMERGED PIPE

Install submerged aeration piping as shown on the drawings.

3.10 COATINGS

After installation, the Contractor shall paint all steel or iron flanges, couplings, and appurtenances in accordance with Section 09900. Painting of the stainless steel pipe is not required. However, the Contractor shall be responsible for supplying and installing the stainless steel piping with a consistently clean surface. Identifying spool piece marks shall be removed with paint thinner or solvents and the entire stainless steel surface shall be washed with detergent and hot water and rinsed clean.

3.11 TESTING

Test air piping in accordance with Section 01666.

END OF SECTION

SECTION 15062

DUCTILE IRON PIPE

PART 1 GENERAL

1.1 DESCRIPTION

The work of this section consists of furnishing and installing ductile iron pipe and fittings.

1.2 RELATED WORK SPECIFIED ELSEWHERE

A. Section 01300 - Submittals

B. Section 02223 - Trenching, Backfilling, and Compacting

C. Section 15010 - General Process and Onsite Utility Piping Provisions

D. Section 15080 - Piping Accessories & Appurtenances

E. Section 15094 - Hangers and Supports

F. Section 15100 - Valves

1.3 REFERENCES

A. Standards of the following agencies are referenced herein: American National Standards Institute (ANSI), American Society for Testing and Materials (ASTM), American Water Works Association (AWWA).

B. Referenced standards shall be the latest revision.

C. In case of conflict with referenced standards, the provisions of this section shall prevail.

D. All potable water (1W) pipe, fittings, accessories, and fixtures shall be certified as “lead free” in accordance with the requirements set out in 22 CCR 116875.

1.4 SUBMITTALS

A. In accordance with Section 01300.

B. Catalog data sheets naming each product to be used identified by manufacturer and type number and additional documentation as required to demonstrate full compliance with this specification.

1.5 PRODUCT HANDLING

Handle pipe and fittings in a manner to insure delivery in a sound undamaged condition.

PART 2 MATERIALS

2.1 DUCTILE IRON PIPE

A. Pipe shall conform to the following standards as applicable:

1. AWWA C104: Cement-Mortar Lining for Ductile-Iron Pipe and Fittings for Water.
2. AWWA C111: Rubber-Gasket Joints for Ductile-Iron Pressure Pipe and Fittings
3. AWWA C115: Flanged Ductile-Iron Pipe with Threaded Flanges
4. AWWA C150: Thickness Design of Ductile-Iron Pipe
5. AWWA C151: Ductile-Iron Pipe, Centrifugally Cast, for Water or Other Liquids
6. AWWA C606: Grooved and Shouldered Joints

B. Unless otherwise noted or required, pipe wall thickness for push-on joint and mechanical joint pipe shall be Pressure Class 350 psi for pipe 12 inches and smaller, and Pressure Class 250 for larger pipe.

C. Unless otherwise noted, all underground and submerged pipes (for all DIP services, with the exception of sanitary sewer, raw sewage, septage, and septage drain piping services, identified below) shall have a cement mortar lining with asphaltic seal coat and finish coat shall be in accordance with Section 09900 (system “D”). Unless noted otherwise, all exposed pipe shall have factory applied epoxy primer (6-8 mil DFT of Tnemec Series L140, Carboguard 61, or equal) and finish coats shall be applied in the field in accordance with Specification Section 09900 (system “D”).

D. Unless otherwise noted, all underground and submerged pipes for sanitary sewer, raw sewage, septage, and septage drain piping services shall have a Protecto 401 ceramic epoxy lining with asphaltic seal coat and finish coat shall be in accordance with Section 09900 (system “D”). Unless noted otherwise, all exposed pipe shall have factory applied epoxy

primer (6-8 mil DFT of Tnemec Series L140, Carboguard 61, or equal) and finish coats shall be applied in the field in accordance with Specification Section 09900 (system "D").

2.2 FITTINGS AND SPECIALS (EXCEPT GROOVED)

A. Fittings and specials shall be ductile iron and shall conform to the following standards as applicable:

1. AWWA C104: Cement-Mortar Lining for Ductile-Iron Pipe and Fittings for Water.

2. AWWA C110: Ductile-Iron and Gray Iron Fittings, 3 In. Through 48 In., for Water and Other Liquids.

3. AWWA C111: Rubber-Gasket Joints for Ductile-Iron Pressure Pipe and Fittings.

4. AWWA C153: Ductile-Iron Compact Fittings, 3 In. Through 24 In. and 54 In. Through 64 In., for Water Service.

5. AWWA C606: Grooved and Shouldered Joints.

B. Unless otherwise noted or required, either standard or compact fittings may be used.

C. Unless otherwise noted, all underground and submerged fittings (for all DIP services, with the exception of sanitary sewer, raw sewage, septage, and septage drain identified below) shall have a cement mortar lining with asphaltic seal coat and field coating shall be in accordance with Section 09900 (system "D"). Unless noted otherwise, all exposed fittings shall have factory applied epoxy primer (6-8 mil DFT of Tnemec Series L140, Carboguard 61, or equal) and finish coats shall be applied in the field per Specification Section 09900 (system "D").

D. Unless otherwise noted, all underground and submerged fittings for sanitary sewer, raw sewage, septage, and septage drain piping shall have a Protecto 401 ceramic epoxy lining with asphaltic seal coat and field coating shall be in accordance with Section 09900 (system "D"). Unless noted otherwise, all exposed fittings shall have factory applied epoxy primer (6-8 mil DFT of Tnemec Series L140, Carboguard 61, or equal) and finish coats shall be applied in the field per Specification Section 09900 (system "D").

E. Grooved fittings shall have center to end dimensions in accordance with AWWA C111, wall thickness in accordance with AWWA C153, and shall be rated for 350 psi for sizes 12-inch and under and 250 psi for larger sizes.

2.3 GROOVED JOINT COUPLINGS

A. In accordance with AWWA C606, except as modified herein.

B. Coupling body shall be ductile iron, ASTM A536.

C. Bolts and nuts shall be made out of the following materials of construction based on the service location:

1. Exposed Dry Environment: ASTM A307, Grade A, low carbon steel; with zinc phosphate coating per ASTM B633.

2. Buried, Exposed Wet Environment, or Submerged: 304 SST, B8 Class 1 per ASTM A193 and A194; with lubricated anti-seize.

3. Chemical or corrosive exposure: 316 SST, B8M Class 1 per ASTM A193 and A194, with lubricated anti-seize; wrapped with wax tape if buried.

4. Coupled to SST, aluminum, or bronze equipment/piping/appurtenances: same material as equipment/piping/appurtenances.

5. Structural supports: see Division 5.

6. Lubrication shall be nickel based (copper free) anti-seize; manufactured by TRX-Synlube by Ramco, Anti-Seize by Ramco, Jusk IT Husky Lube O'Seal, or equal.

2.4 TYPE OF JOINTS

A. Buried joints shall be push-on, mechanical joint, or flexible grooved joint unless otherwise shown or required for the installation.

B. Exposed joints shall be flanged or rigid grooved unless otherwise shown or required for the installation.

C. Unless otherwise noted or required, rigid grooved couplings may be substituted where flanged joints are shown on the drawings.

2.5 FLANGES

A. AWWA C110 suitable for working pressures of 250 psi unless otherwise indicated, or required for the installation. Drilling pattern shall be Class 125 unless noted otherwise.

B. Flanges for spool pieces shall be factory installed threaded flanges. Flanges for fittings shall be cast integrally with the fitting.

2.6 RESTRAINED MECHANICAL JOINTS

Where specified, called for on the Drawings, or otherwise required for thrust restraint, mechanical joints shall be made using retainer glands with set screws or clamping lugs. Restraint shall be made in America. Retainer glands shall be as manufactured by EBAA Iron; Tyler Pipe, Star Pipe Products, or equal.

2.7 RESTRAINED PUSH-ON JOINTS

Where specified, called for on the drawings, or otherwise required for thrust restraint, push-on joints shall be Flex-Ring as manufacturer by American Ductile Iron Pipe, TR Flex as manufactured by US Pipe, or equal. Restrained joint shall provide for joint deflection after assembly.

2.8 RUBBER GASKET FOR MECHANICAL OR PUSH-ON JOINT

Provide 1/8-inch thick SBR or Neoprene.

2.9 FLANGED GASKETS

Full face or ring, except that ring gaskets shall be used for sizes 14-inch and greater. Gaskets shall be 1/8”inch thick synthetic rubber (SBR or Neoprene) for test pressures up to 250 psi. Gasket to be Garlock Multi-Swell Style 3760, or approved equal.

For test pressures greater than 250 psi, provide suitable gasket as recommended by manufacturer.

2.10 BOLTS AND NUTS FOR FLANGES

A. Bolts and nuts shall be made out of the following materials of construction based on the service location:

1. Exposed Dry Environment: ASTM A307, Grade A, low carbon steel; with zinc phosphate coating per ASTM B633.
2. Buried, Exposed Wet Environment, or Submerged: 304 SST, B8 Class 1 per ASTM A193 and A194; with lubricated anti-seize.
3. Chemical or corrosive exposure: 316 SST, B8M Class 1 per ASTM A193 and A194, with lubricated anti-seize; wrapped with wax tape if buried.
4. Coupled to SST, aluminum, or bronze equipment/piping/appurtenances: same material as equipment/piping/appurtenances.
5. Structural supports: see Division 5.
6. Lubrication shall be nickel based (copper free) anti-seize; manufactured by TRX-Synlube by Ramco, Anti-Seize by Ramco, Jusk IT Husky Lube O’Seal, or equal.

2.11 FASTENERS EXCEPT GROOVED COUPLINGS

A. General: In accordance AWWA C111 and appendices attached thereto.

B. All fasteners shall be made out of the following materials of construction based on the service location:

1. Exposed Dry Environment: ASTM A307, Grade A, low carbon steel; with zinc phosphate coating per ASTM B633.

2. Buried, Exposed Wet Environment, or Submerged: 304 SST, B8 Class 1 per ASTM A193 and A194; with lubricated anti-seize.

3. Chemical or corrosive exposure: 316 SST, B8M Class 1 per ASTM A193 and A194, with lubricated anti-seize; wrapped with wax tape if buried.

4. Coupled to SST, aluminum, or bronze equipment/piping/appurtenances: same material as equipment/piping/appurenances.

5. Structural supports: see Division 5.

6. Lubrication shall be nickel based (copper free) anti-seize; manufactured by TRX-Synlube by Ramco, Anti-Seize by Ramco, Jusk IT Husky Lube O'Seal, or equal.

2.12 GROOVED FITTINGS

Cast iron, ASTM A48, Class 30-A, cement lined. Victaulic, Gustin-Bacon, or equal.

2.13 POLYETHYLENE ENCASEMENT

Buried piping, specials, and fittings shall be polyethylene encased, double wrapped - 8 mils thickness, sized to pipe diameter, AWWA-C105.

2.14 GLASS LINING (PORCELAIN ENAMEL)

A. Where called for on the Drawings, ductile iron pipe shall be lined with glass as manufactured by Ferrock, Water Works Supply, or equal.

B. Material: Special glasses and inorganic materials suited for lining of sewage, sludge, and scum piping with the following characteristics.

1. Thickness: 0.010 to 0.012-inch

2. Hardness: 5 to 6 on the Mohs Scale

3. Density: 2.5 to 3.0 grams per cubic centimeter, measured in accordance with ASTM D792.

4. Thermal Shock Resistance: Capable of withstanding 350 degrees Fahrenheit change from 430 degrees Fahrenheit to 80 degrees Fahrenheit without crazing, blistering, or spalling.

5. Gloss Retention: Capable of retaining gloss after immersion of an 8 percent sulfuric acid solution at 148 degrees Fahrenheit for 10 minutes.

6. Weight Loss: Maximum 3 milligrams per square inch when tested in accordance with ASTM C283.

C. Fabrication:

1. Use piping that is suitable fro glass lining with minimum 350 psi Pressure Class will thickness after application of glass lining.

2. Fittings and flanges shall be rated for 350 psi service.

3. Machine interior of pipe (bore or grit blast to near white metal) prior to application of glass lining.

4. Screw factory assembled flanges on pipe and align bolt holes and flange faces, unless otherwise specified.

5. Apply lining to surfaces free of chemicals.

6. Place piping in especially designed furnaces and heat piping until glass melts and fuses with an integral molecular bond to the base metal.

D. Holiday Testing: Provide continuous coverage as tested by a low voltage wet sponge holiday detector. Only isolated voids due to casting anomalies and representing less than 0.05% of the total glassed surface shall be permitted.

E. For systems using glass lining, all gaskets shall be full-face and match the inside diameter of the piping to protect the entire flange from damage. Full face Flange-Tyte, or equal.

2.15 FUSION EPOXY LINING AND COATING (FELC)

Where specified or called for on the drawings, ductile iron fittings and specials shall be fusion epoxy lined and coated as specified herein:

A. The fusion epoxy coating shall be 3M Scotchkote 206N (fluidized bed grade), or equal. Surface preparation shall be in accordance with SSPC-SP 10 Near White Blast Cleaning. The application method shall be by the fluidized bed method and shall attain 16 mils minimum dry film thickness.

B. Field welds, connections and otherwise damaged areas shall be coated and patched according to the manufacturer's instructions with 3M Scotchkote 312.

2.16 PROTECTO 401 (CERAMIC EPOXY)

A. Lining: Where specified or called for on the drawings, ductile iron pipe and fittings shall be lined with Protecto 401 ceramic epoxy. The material shall be an amine cured novalac epoxy containing at least 20% by volume of ceramic quartz pigment. The ceramic epoxy must meet the following properties:

1. 40 mils nominal dft
2. Permeability rating of 0.00 when tested according to Method A or ASTM E-96-66, Procedure A with test duration of 30 days.
3. Salt Spray results equal to 0.0 undercutting after 2-years, tested per ASTM B-117; <0.5 mm undercutting after 30-days, per ASTM G-95 cathodic disbondment 1.5-volts at 77-degrees Fahrenheit; no effect after 2-years (test per ASTM D-714-87) with 20% sulfuric acid, 140-degrees Fahrenheit 25% sodium hydroxide, and 160-degree Fahrenheit distilled water.
4. Abrasion resistance of <3mils loss after on-million cycles using European Standard EN 598, 1994 Section 7.8.

B. Coating: Unless otherwise noted, all underground and submerged pipes and fittings shall have an asphaltic seal coat and finish coat shall be in accordance with Section 09900 (system “D”). Unless noted otherwise, all exposed pipe and fittings shall have factory applied epoxy primer (6-8 mil DFT of Tnemec Series L140, Carboguard 61, or equal) and finish coats shall be applied in the field in accordance with Specification Section 09900 (system “D”).

C. Protecto 401 shall be applied as indicated by the published specifications of the coating manufacturer.

D. For systems using Protecto 401, all gaskets shall be full-face and match the inside diameter of the piping to protect the entire flange from damage. Full face Flange-Tyte, or equal.

PART 3 EXECUTION

3.1 INSTALLATION

A. Install in accordance with the drawings, applicable sections of these specifications, applicable sections of previously referenced AWWA standards, AWWA C600, and manufacturer’s recommendations. In case of conflict, the drawings and specifications shall govern.

B. Bell and Spigot Ductile Iron Pipe: Where bell and spigot joints are used for joining ductile iron pipe, the joints shall be made using rubber rings, US "Tyton", Clow "Super Bell-Tite" joint, or equal. Gasket seat, gasket, and spigot shall be thoroughly cleaned before assembly

of joint. The entire procedure shall be in strict accordance with manufacturer's recommendations.

C. Mechanical Joint Ductile Iron Pipe: Mechanical joints in ductile iron pipe shall be made as follows: Gland shall be placed on spigot end of pipe with lip extension toward the joint. The rubber gasket shall then be slipped on the pipe with its thick edge toward the gland. The gasket and joint surfaces shall then be thoroughly wetted using a soapy solution made with vegetable soap or similar soap as recommended by the manufacturer. The spigot end of the pipe shall then be inserted to full depth of the mechanical joint socket and the gasket pressed firmly into place in the bell in order to obtain an even "set" all around the joint. The gland shall then be moved into place, the bolts inserted and the nuts taken up tightly with fingers. The nuts shall then be tightened gradually by wrench a half turn at a time, moving wrench from one nut to another repeating until all nuts are uniformly tight. Final tightness shall be with a torque wrench as follows: three-quarter inch bolts 60 to 90 pounds torque.

D. Flanged Pipe: Flanged joints shall be made up square, with even pressure on the gaskets, and shall be watertight.

E. Grooved Coupling: Grooved couplings shall be prepared or painted as necessary to obtain a leak-free seal.

F. Polyethylene Encasement for External Corrosion Protection for Buried Piping:

1. General: Provide polyethylene encasement for all buried Ductile Iron Pipe.

2. Installation on Pipe

a. Pick up the pipe with a sling or pipe tongs. Slip a polyethylene tube which is approximately two feet longer than the pipe over the plain end and leave it bunched up accordion style.

b. Lower the pipe into the trench and make up the joint with the preceding pipe. Shallow bell holes are required to allow overlap of the tube at the joints.

c. Remove the sling or tong from the center of the pipe, raise the bell a few inches and slip the polyethylene tube along the pipe barrel, leaving approximately one foot of the tube bunched up at each end of the pipe for wrapping the joints.

d. Overlap each joint by first pulling one bunched-up tube over the bell, folding it around the adjacent plain end, and securing it in place with two or three wraps of the polyethylene adhesive tape. Complete the overlap by repeating the same procedure with the bunched-up tube on the adjacent pipe.

e. Take up the slack tube along the pipe barrel by folding it over the top of the pipe holding the fold in place with polyethylene adhesive tape.

f. Repair any rips, punctures or other damage to the polyethylene with tape or by cutting open a short length of tube, wrapping it around the pipe and securing with tape.

3. Installation on Fittings, Valves and Piping Specialties

   a. Fit bends, reducers and offsets with polyethylene tube in the same manner described above for pipe.

   b. Wrap valves, tees, crosses and specialty items with a flat sheet obtained by splitting open a length of polyethylene tube. Pass the sheet under the valve or fitting and bring it up around the body. Join the seams by bringing the edges together, folding over twice and securing in place with tape.

   c. Handle slack tube and overlapping at joints in the same manner described above for pipe.

   d. Prepare openings for service taps, air reliefs, etc., by making an X-shaped cut in the polyethylene and temporarily folding back the edges. After installation is completed, replace the polyethylene and repair the cut with polyethylene adhesive tape.

4. Backfilling

   a. Care shall be taken not to damage the polyethylene.

   b. Initial backfill material shall be free of rocks and debris which could puncture the polyethylene. If suitable backfill material is not available, felt roofing or similar material can be laid over the top of the pipe to protect the polyethylene.

   c. In general, backfilling shall be done in accordance with AWWA Standard C-600.

3.2 COATING

All exposed ductile iron pipe shall be have factory applied epoxy primer and finish coats shall be applied in the field as stated above and in Specifications Section 09900.

END OF SECTION

SECTION 15071

PLASTIC PIPE

PART 1 GENERAL

1.1 DESCRIPTION

The work of this section consists of furnishing and installing polyvinyl chloride pipe and fittings.

1.2 RELATED WORK SPECIFIED ELSEWHERE

A. Section 01300 - Submittals

B. Section 02223 - Trenching, Backfilling, and Compacting

C. Section 15010 - General Process and Onsite Utility Piping Provisions

D. Section 15094 - Hangers and Supports

E. Section 15080 - Piping Accessories and Appurtenances

F. Section 15100 - Valves

1.3 QUALITY ASSURANCE REFERENCES

This section contains references to some or all of the following documents, most recent edition. They are a part of this section as specified and modified. In case of conflict between the requirements of this section and those of the listed documents, the requirements of this section shall prevail.

Reference	Title
ASTM D1248	Polyethylene Plastics Molding and Extrusion Materials.
ASTM D1784	Rigid Polyvinyl Chloride (PVC) Compounds and Chlorinated Poly (Vinyl Chloride) (CPVC) Compounds
ASTM D1785	Polyvinyl Chloride (PVC) Plastic Pipe, Schedules 40, 80, and 120
ASTM D2464	Threaded Polyvinyl Chloride (PVC) Plastic Pipe Fittings, Schedule 80

ASTM D2466	Polyvinyl Chloride (PVC) Plastic Pipe Fittings, Schedule 40
ASTM D2467	Socket-Type Poly Vinyl Chloride (PVC) Plastic Pipe Fittings, Schedule 80
ASTM D2564	Solvent Cements for Polyvinyl Chloride (PVC) Plastic Pipe and Fittings
ASTM D3034	Type PSM Polyvinyl Chloride (PVC) Sewer Pipe and Fittings
ASTM D4101	Propylene Plastic Injection and Extrusion Materials
ASTM F402	Practice for Safe Handling of Solvent Cements and Primers Used for Joining Thermoplastic Pipe and Fittings
AWWA C900	Polyvinyl Chloride (PVC) Pressure Pipe and Fabricated Fittings 4" through 12" for Water Transmission and Distribution
AWWA C905	Polyvinyl Chloride (PVC) Pressure Pipe and Fabricated Fittings 14" through 48" for Water Transmission and Distribution

All potable water (1W) pipe, fittings, accessories, and fixtures shall be certified as "lead free" in accordance with the requirements set out in 22 CCR 116875.

1.4 SUBMITTALS

In accordance with Section 01300.

PART 2 MATERIALS

2.1 PVC PRESSURE PIPE:

A. General: PVC materials for pipe and fittings shall conform to ASTM D1784, Cell Classification 12454 type 1 grade 1. In addition, additives shall be less than 7% by weight. Pipe and fitting materials shall be specially formulated with sufficient UV protection additives to provide for long-term outdoor exposure with no deleterious effects. Flanges shall be one-piece solid design or two-part van stone type which utilize the tapered, serrated face and full face gasket technique for joining and are compatible with ANSI N16.5 Class 150 metal flanges. Unions shall be the O-ring seal type having interchangeable components with true union valves for maximum system versatility.

B. Schedule 40, 80, and 120: Pipe in accordance with ASTM D1785. Schedule 80 PVC socket type fittings shall conform to ASTM D2467. Schedule 40 PVC fittings shall conform to ASTM D2466. PVC solvent weld cement for socket connections shall meet the requirements of ASTM D2564. Schedule 80 PVC threaded fittings shall conform to ASTM D2464.

Solvent cement shall be as recommended by the manufacturer for each service. Cement for hydroxide and hypochlorite solutions shall be IPS 724 or equal. Solvent welding is not permissible on pipes 4-inches in diameter or larger.

C. C900 (Class as indicated in Section 15010): Pipe shall meet the requirements of AWWA C900, "Polyvinyl Chloride (PVC) Pressure Pipe". All Class 165 pipe shall meet the requirements of DR 25, Class 235 pipe shall meet the requirements of DR 18 and Class 305 the requirements of DR 14. All pipe shall be suitable for use as pressure conduit. Provisions must be made for expansion and contraction at each joint with an elastomeric ring. The bell shall consist of an integral wall section with a locked-in, solid cross section elastomeric ring which meets the requirements of ASTM F477. The bell section shall be designed to be at least as hydrostatically strong as the pipe wall and meet the requirements of AWWA C900.

D. C905 (Class as indicated in Section 15010): Pipe shall meet the requirements of AWWA C905, "Polyvinyl Chloride (PVC) Water Transmission Pipe". All Class 165 pipe shall meet the requirements of DR 25, Class 235 pipe shall meet the requirements of DR 18 and Class 305 shall meet the requirements of DR 14. In addition, additives shall be less than 10% by weight. All pipe shall be suitable for use as pressure conduit and shall be cast iron pipe o.d. Provisions must be made for expansion and contraction at each joint with an elastomeric ring. The bell shall consist of an integral wall section with a locked-in, solid cross section elastomeric ring which meets the requirements of ASTM F477. The bell section shall be designed to be at least as hydrostatically strong as the pipe wall. All reclaimed water piping (RW, 3W) shall be purple in color.

Fittings for C900 and C905 pipe shall be either ductile iron or PVC as follows:

1. Ductile Iron Fittings: As specified in Section 15062.
2. PVC Fittings: In accordance with AWWA C907, 4-8 inch.
3. Fittings shall be double wrapped (8 mil) polyethylene encasement, sized to diameter, ANSI/AWWA – C1051/A21.5. Refer to Specification Section 15062.

E. Restrained Joint PVC Pipe

1. For pipes between 4” and 12” diameter:
    a. Pipe shall be manufactured only from water distribution pipe and couplings conforming to AWWA C900. The restrained joint pipe system shall also meet all short and long term pressure test requirements of AWWA C900. Pipe, coupling, and locking splines shall be completely non-metallic to eliminate corrosion problems.
    b. Nominal outside diameters and wall thicknesses of thrust-restrained pipe shall conform to the requirements of AWWA C900. Pipe shall be Class 235 (DR 18) or Class 305 (DR 14) furnished in standard lengths of 20 feet.
2. For pipes between 14” and 24” diameter:
    a. Pipe shall be manufactured from water distribution pipe and couplings conforming to AWWA C905. The restrained joint pipe system shall also meet all short and long term pressure test requirements of AWWA C905. Pipe, coupling, and locking splines shall be completely non-metallic to eliminate corrosion problems.

b. Nominal outside diameters and wall thicknesses of thrust-restrained pipe shall conform to the requirements of AWWA C905. Pipe shall be Class 235 (DR 18) or Class165 (DR 25) furnished in standard lengths of 20 feet.

3. Pipe shall be joined using non-metallic couplings which, together, have been designed as an integral system for maximum reliability and interchangeability. High-strength flexible thermoplastic splines shall be inserted into mating precision-machined grooves in the pipe and coupling to provide full 360° restraint with evenly distributed loading. MJ Gland Adapters shall be used to anchor this restrained-joint PVC pipe to ductile iron accessories such as fittings and valves.

4. Pipe shall be white for potable water service (1W and 2W) and purple for reclaimed water service (3W).

5. Restrained joint PVC pipe and fittings shall be the Napco (CertainTeed) Certa-Lok C900/RJ System, or approved equal.

F. Restrained PVC Pipe:

1. Where specified, called for on the Drawings, or otherwise required for thrust restraint, restrained joints shall be made using a bell restraint harness.

a. The restraint shall be manufactured of ductile iron conforming to ASTM A536. A back up ring shall be utilized behind the PVC bell. A restraint ring, incorporating a plurality of individually actuating gripping surfaces, shall be used to connect the bell ring and gripping ring.

b. Restraint shall be as manufactured by EBAA Iron, Star Pipe Products, or equal.

2. Materials and Coatings:

a. Wedge and Wedge Assemblies, T-bolts, Bolts and Nuts:

1) Exposed Dry Environment: ASTM A307, Grade A, low carbon steel; with zinc phosphate coating per ASTM B633.

2) Buried, Exposed Wet Environment, or Submerged: 304 SST, B8 Class 1 per ASTM A193 and A194; with lubricated anti-seize.

3) Chemical or corrosive exposure: 316 SST, B8M Class 1 per ASTM A193 and A194, with lubricated anti-seize; wrapped with wax tape if buried.

4) Coupled to SST, aluminum, or bronze equipment/piping/ appurtenances: same material as equipment/piping/appurtenances.

5) Lubrication shall be nickel based (copper free) anti-seize; manufactured by TRX-Synlube by Ramco, Anti-Seize by Ramco, Jusk IT Husky Lube O'Seal, or equal.

2.2 PERFORATED PVC PIPE

A. Pipe shall be standard duty PVC pipe manufactured by IPEX, or equal. Pipe shall conform to the requirements of CSA B182.1, B182.2, and ASTM D3034 or ASTM F-679.

B. Perforating shall consist of two rows of 15 mm holes positioned at 120° radially on the pipe, and spaced to provide a minimum total cross sectional hole area of 1,933 mm^2 per meter of length. Pipe shall be supplied with friction-fit bell ends.

2.3 PVC SEWER PIPE

A. General: Pipe and fittings shall be made of PVC plastic having a cell classification of 12454, type I grade I, as defined in ASTM D1784 and shall have a SDR and minimum pipe stiffness as scheduled below. T-1 wall only is allowed. Additives and filters including but not limited to stabilizers, antioxidants, lubricants, colorants, etc., shall not exceed 10 parts by weight per 100 of PVC resin in the compound.

B. Pipe: PVC gravity sewer pipe and fittings shall conform to ASTM D3034 for diameters from 4-inches to 15-inches, and ASTM F679 for diameters from 18-inches to 30-inches, with integral-bell gasketed joints. Rubber gaskets shall be factory installed and conform to ASTM F 477. Pipe joints shall conform to ASTM D3212. Pipe shall be solid wall only, profile wall pipe is not allowed. Pipe thickness class shall be as follows:

1. For depths of cover 12 feet and less, SDR-35 pipe shall be installed by the Contractor.

2. For depths of cover greater than 12 feet, SDR-26 pipe shall be installed by the Contractor.

C. Fittings: Pipe fittings shall be gasketed fittings matching the pipe SDR and conforming to ASTM D-2855 or ASTM F1336 as applicable. Fittings shall either be injection molded fittings as available or as specified for fiberglass wrapped C905 PVC fittings above. Fittings shall be as manufactured by IPEX or equal. Refer to ASTM D3034 for diameters from 4-inches to 15-inches and ASTM F679 for diameters from 18-inches to 30-inches, with integral-bell gasketed joints.

D. Transition fitting: for piping connections with dissimilar outside diameter (for example, SDR to DIP), provide transition coupling. The coupling shall have follower flanges and a sleeve made of cast ductile iron per ASTM A-536. Flanges shall be color coded to identify general type of pipe (red for IPS size, Blue for ductile iron sizes, and gray for Cement sizes). Gasket shall be Buna N and NSF 61 rated with temperature range from -20 to 180 degrees F. The nuts and bolts shall be 304 SST. Coat fitting with fusion epoxy. Manufactured by Smith Blair Inc, model 441 Omni cast coupling, or equal.

2.4 DOUBLE CONTAINMENT PIPING SYSTEM

A. Manufacturers: One of the following or equal:

1. Harrington Industrial Plastics.

2. Guardian Systems, division of IPEX Inc.

B. Materials:

1. Compatible for continuous exposure to chemical service specified in pipe schedule at ambient temperatures and maximum pressure equal to the test pressure.

2. Prefabricated Fittings: Consisting of an inner (carrier) pipe elbow totally enclosed and spaced in an outer (containment) pipe elbow. Split fittings requiring field cutting, welding or joining shall not be used.

3. Inner Pipe: Schedule 80 PVC pipe, joined to fittings and each other by solvent welding. Provide pipe as specified under PVC pressure pipe, in accordance with Part 2.01.B.

4. Outer (containment) pipe shall consist of Schedule 40 PVC pipe. Provide pipe as specified under PVC pressure pipe, in accordance with Part 2.01.B.

5. Provide nonmetallic spacers on inner pipe to control sagging within containment pipe.

C. Design:

1. Expansion loops as required for expected ambient temperature range of 0 to 120 degrees Fahrenheit.

2.5 IRRIGATION PIPE (PIP)

A. Pipe dimension, chemical, and physical requirements shall be conform to ANSI S376.1 and SCS 430-DD.

B. Made with an integral bell to utilize a gasket for sealing, gaskets per ASTM F477 and gasket joints per ASTM D3139.

C. Each male end shall be beveled, swagged or deburred to facilitate joining and shall be marked to reference proper insertion depth.

D. Provide SDR 32.5 (118psi) pressure rated pipe

2.6 POLYETHYLENE TUBING (PE)

Tubing (Air Service): Polyethylene tubing shall be rated for 160 psi minimum, 5/8" diameter minimum. Fittings shall be compression type, Parker "Fast Tite" or equal.

2.7 INDUSTRIAL HOSE

Provide a 50-foot long industrial hose with each hose valve installation, in accordance with Specification Section 15100.

PART 3 EXECUTION

3.1 INSTALLATION OF PIPE AND FITTINGS

A. General: In accordance with manufacturer's recommendations, ASTM 2321 and Section 15010, whichever is more stringent.

B. Pipe and fittings shall be of the sizes indicated. Clean pipe interior of all foreign matter before installing. Pipe shall be square cut with fine tooth saw or other cutter or knife designed for use with plastic pipe. Remove burrs by smoothing edges with a knife, file, or sandpaper. Replace any section of pipe found to be defective or damaged with new acceptable pipe. Handle pipe carefully to prevent gouging or scratching. Any length of pipe having a gouge, scratch, or other permanent indentation more than 10 percent of the wall thickness in depth shall be rejected.

3.2 INSTALLATION OF SOLVENT WELD JOINT TYPE PIPE

In accordance with the recommendations of the pipe manufacturer and the following supplementary requirements:

A. Do not solvent weld joints if it is raining, if atmospheric temperature is below 40 degrees F or above 90 degrees F, if the pipe is exposed to direct sunlight.

B. Test fit dry pipe and fittings before applying cement. Pipe should enter socket without forcing at least one-third but not more than two-thirds the depth of socket. Fittings that are looser or tighter shall not be used. Thoroughly clean and dry the pipe end and socket of fitting with methyl ethyl ketone, acetone, or similar cleaner. Apply cement evenly to outside surface and end of pipe and inside surface of socket. Avoid excess application of cement but insure complete coverage of all bonding surfaces. Mark depth of socket on pipe to guide application of cement and insure full insertion of pipe. Insert pipe in socket, twisting pipe or fitting approximately ½ turn as pipe is being seated in socket. Make sure

pipe is fully seated providing a bond between end of pipe and shoulder of socket. Immediately wipe excess cement from pipe leaving no more than a 1/8-inch fillet at fitting end. Hold assembled joint in place for approximately 15 seconds and allow to set for 30 minutes before moving. Avoid rough handling for 48 hours. Longer periods may be required in cold or wet weather.

3.3 INSTALLING DOUBLE CONTAINED PIPE

A. Secondary containment joints solvent cemented using heavy body-slow set PVC cement ASTM D 2564 made in accordance with ASTM D 2855.

B. Install piping in accordance with manufacturer's published instructions.

C. Slope pipe continuously to drain to a low point Pipe shall be continuously sloped to drain to a low point. Provide tee with minimum 3 inch riser pipe to grade for inspection and access at all low points. Provide threaded cap at top of riser pipe installed in a valve box.

D. If no leak detection is required, ends of outer containment pipe shall be closed.

3.4 TESTING

Pressure and Mandrel Testing: Shall be in accordance with Section 01666 and 15010.

END OF SECTION

SECTION 15080

PIPING ACCESSORIES AND APPURTENANCES

PART 1 GENERAL

1.1 DESCRIPTION

The work of this section consists of providing piping accessories and appurtenances.

1.2 RELATED WORK SPECIFIED ELSEWHERE

A. Section 01300: Submittal

B. Division 15: Mechanical

C. Section 15010: General Process and Onsite Utility Piping Provisions

1.3 QUALITY ASSURANCE

A. Reference, American Society for Testing and Materials (ASTM).

B. All grooved joint couplings, fittings, valves, and specialties shall be the products of a single manufacturer. Grooving tools shall be of the same manufacturer as the grooved components.

C. All castings used for coupling housings, fittings, valve bodies, etc., shall be date stamped for quality assurance and traceability.

1.4 SUBMITTALS

A. Materials list and catalog data sheets naming each product to be used identified by manufacturer and type number.

B. Grooved joint couplings and fittings shall be shown on drawings and product submittals, and shall be specifically identified with the applicable style or series designation.

PART 2 MATERIALS

2.1 FLEXIBLE COUPLINGS

A. Application

	Baker	Rockwell	Dresser
Iron pipe size O.D. pipe	200	411,521	38,90
Ductile iron	228	411, 431, 441	38, 53, 138, 153
Transition	212, 236	413, 433	162
Reducing	220, 240	415, 435	62
Flanged coupling adapter	601, 602, 603, 604	912, 913, 914, 916	127, 128

1. Rockwell International, 400 North Lexington, Pittsburg, PA 15208
2. Dresser Mfg., 41 Fisher Ave., Bradford, PA 16701
3. R.H. Baker & Co., 2929 Santa Fe Ave., Los Angeles, CA 90058, or equal.

B. Materials: Cast couplings shall be used wherever possible. Steel couplings with a minimum sleeve thickness of the connecting pipe wall or ¼-inch, whichever is greater, shall be used where cast couplings are not available.

1. Sleeve: Grey iron or steel.
2. Flanges: Malleable or ductile iron or high strength steel.
3. Bolts and Nuts: Low alloy, high strength, zinc coated when exposed, 304 stainless steel when buried, 316 stainless steel or below top of wall in water bearing structures.
4. Finish of Coupling: fusion epoxy coating.
5. Gaskets:
    a. Synthetic rubber (Rockwell grade 60, Dresser 42) High-temperature, non-asbestos gasket for service above 212°F.

C. Wrap couplings, two feet beyond on either side, with geotextile fabric suitable to temperatures stated above.

D. Split-Sleeve couplings, with double-arched housing and O-ring gaskets may be used in lieu of sleeve-type. Couplings shall be restrained (FxF), expansion (ExE), or a combination (FxE) as required, manufactured by Victaulic Depend-O-Lok, Doraville, GA 30362.

2.2 FLANGED RUBBER FLEXIBLE CONNECTIONS

A. The flexible connection shall be manufactured with a hypalon rubber tube with synthetic fabric reinforced rubber body and a neoprene cover. Nylon is unacceptable. A hypalon rubber coating shall be applied to the outside to provide resistance to deterioration. Steel wire reinforcement shall be imbedded in the body for additional strength.

B. Flanges shall be constructed integrally with the body to resist stresses, drilled to ANSI B 16.5, class 150, and full faced to eliminate the use of gaskets. Retaining rings shall be 304 SST and control rods shall be low alloy, corrosion resistant high strength.

C. The flexible connections shall have a minimum design pressure rating of 50 psi, a minimum burst ratio of 4:1, and a minimum vacuum rating of 10" Hg.

D. The flexible connections shall be single arch configuration.

E. Flanged rubber flexible connections shall be Redflex ™ Type J-1W and Type J-10 (concentric reducing type) as manufactured by the Red Valve Company, Inc. of Carnegie, PA 15106 or equal.

F. For High Temperature Service – for all air piping, provide flanged rubber flexible connections and gaskets on air piping shall be suitable for temperatures up to 300°F.

2.3 FLEXIBLE METAL HOSE CONNECTORS

A. NPT Union or 150 pound flanged end connections.

B. Type 321 stainless steel hose and braid.

C. Minimum 200 steady working pressure at room temperature, safety factor of 4:1.

D. Anaconda Metal Hose Type PCM or SPCF, 18518 Susana Rd., Compton, California 90221, Flexonics MMT or FLG, 300 East Devon Ave., Bartlett, IL 60103, or equal.

2.4 TENSION ASSEMBLIES

A. Welded

1. Assemblies per AWWA M11, Section 13.10
2. Rods shall be 304 SST.
3. Buried assemblies shall receive two coats Koppers, Bitumastic 50, or equal.

B. Socket Clamps

1. Carbon steel half bands, bolts and nuts, 304 SST.

2. Socket clamps, Grinnell Fig. 595, B-Line Systems Fig. B3134, or equal.

3. Socket clamp washers, Grinnell Fig. 594, B-Line Fig. B3134W, or equal.

4. Yoke, Grinnell Fig. 591.

5. Tee anchor strap, Grinnell Fig. 593, or equal.

6. Buried assemblies shall receive two coats Koppers, Bitumastic 50, or equal.

7. Grinnell Corporation, 155 Westminster Street, Providence, RI 02903; B-Line Systems, 509 West Monroe St., Highland, IL 62249, or equal.

2.5 INSULATED (DIELECTRIC) FITTINGS

A. General: Provide complete insulation between sections of pipe in which installed. All pipelines of dissimilar metals shall be insulated from each other.

1. All buried pipelines of dissimilar metals shall be insulated from each other.

2. All locations where a buried pipeline connects to aboveground piping shall have a dielectric flange.

3. All buried valves shall have dielectric fittings.

B. Couplings and Bushings

1. Made of Delrin for sizes less than 2 inches, Calpico, Inc.,185 Harbor, South San Francisco, California 94080; Pacific Seal Industries, 3333 N. San Fernando Blvd., Burbank, California 91504, or equal.

C. Waterway Fittings

1. Electroplated steel nipple or ductile iron casing with inert thermoplastic lining, and grooved and/or threaded ends.

2. Victaulic Company; Series 47.

D. Flanges

1. Assembly consisting of gaskets, insulating bolt sleeves, and appurtenances.

2. Pacific Seal Industries; Calpico, Inc.; or equal.

2.6 PRESSURE GAUGES (PG)

A. Liquid filled, glycerine or silicone.

B. 2½- to 3½-inch dial, scale 20-50% greater than normal operating pressure, 270 degree movement.

C. Stainless steel case and polycarbonate window.

D. Provide gauges with Type 316 stainless steel socket and bellows or bourdon tube, depending on pressure range.

1. Where the maximum pressure is less than or equal to 15 pounds per square inch the gauge shall use bellows as the measuring element.

2. Where the maximum pressure is greater than 15 pounds per square inch, the measuring element shall be a bourdon tube.

E. 2½ percent accuracy.

F. ¼-inch NPT bottom connection.

G. Mount gauges on diaphragm seals where indicated on the Drawings.

1. Provide diaphragm seals with Type 316 stainless steel top housing, bottom housing, and bolt assemblies.

a. Bottom housing shall be fitted with a ¼-inch flushing connection.

b. This flushing connection shall be fitted with a Type 316 stainless steel close nipple and a brass shutoff cock.

c. Diaphragm Seal: Removable.

1) For pressure less than or equal to 15 pounds per square inch, provide a diaphragm seal.

2) For pressures greater than 15 pounds per square inch, provide Type 316 stainless steel diaphragm seal.

d. Fit diaphragm seal gauge assembly with a snubber.

e. Snubber shall have porous metal disc sized to dampen pressure fluctuations in the filled system.

f. Snubber shall be Stainless Steel.

g. Snubber filter disc shall be sized to prevent the gauge from pulsating.

h. Provide diaphragm seal gauge assemblies filled with silicone. Gauges used for chemical service shall utilize PTFE diaphragm seals and PVC gauge guard housings.

2. Pressure gauges, except gauges with diaphragm seals, shall have pulsation dampeners installed between the gauge and the shut-off valve.

3. Pulsation Dampeners shall be Stainless Steel.

H. Annular Seal Pressure Sensors

1. Pressure Sensors are to be of the full flange design, to be retained between standard ANSI B16.1 Class 125/6.5 Class 150 pipeline flanges.

2. The outside diameter of the sensor shall match the outside diameter of the mating flange.

3. Sensor shall be flow through design with flexible elastomer sensing ring around the full circumference. The elastomer sensing ring shall be rigidly clamped between metal end cover flanges, and no part of the elastomeric sensing ring shall be exposed to the external face of the sensor. There shall be no dead ends or crevices and flow passage shall make the sensor self-cleaning.

4. The pressure sensing ring shall measure pressure for 360° around the full inside circumference of the pipeline. Flexible sensing ring shall have a cavity behind the ring filled with fluid to transfer pressure to the gauge.

I. Manufacturers

1. Pressure Gauges: One of the following or equal:

   a. U.S. Gauge Division of Ametek, Inc. Solfrunt Gauges, Figure Number 1931T.

   b. Dresser Industries, Inc., Ashcroft Figure Number 1379.

2. Diaphragm Seal: One of the following or equal:

   a. For pressure less than or equal to 15 pounds per square inch:

      1) Ashcroft, Type 301.

      2) Mansfield and Green, Type LG.

      3) For chemical service, Plast-O-Matic Series GGMT.

   b. For pressures greater than 15 pounds per square inch:

      1) Ashcroft, Type 101.

      2) Mansfield and Green, Type RG.

      3) For chemical service, Plast-O-Matic Series GGMT.

3. Snubber: One of the following or equal:

   a. Chemiquip, Ashcroft

4. Pulsation Dampeners: One of the following or equal:

   a. Dresser Industries, Inc., Ashcroft Figure Number 1106S.

   b. Operation and Maintenance Specialties, Charlotte, N. C., Ray Pressure Snubbers.

5. ¼-inch stainless steel cross handle cock, Ashcroft 7004; Marsh MFG, or equal.
6. Pressure Annual Seal
    a. Red Valve Series 40.
    b. Ashcroft ISO-Ring.
    c. Approved equal.

2.7 LINE SIZE PRESSURE SENSORS

A. Full line size with flanged or threaded ends.

B. Carbon steel body with flexible neoprene tube and liquid cavity.

C. Rated at 200 psi with 2 percent accuracy.

D. Gauge and liquid as specified in subsection 2.11 above.

E. Red Valve Series 30 or 40, 500 No. Bell Ave., Carnegie, PA 15106; Ronningen-Petter "Iso-Spool" or "Iso-Ring", Portage, MI 49081, or equal.

2.8 FLUSHING CONNECTION

A. Cast bronze swivel inlet adapter, rocker lugs.

B. 1-inch NPT inlet, hose thread outlet.

C. DeSanno Foundry & Machine Co. No. 73, 1933 Peralta, Oakland, CA 94607; Champion No. 10, 1460 No. Naud St., Los Angeles, CA 90012, or equal.\

2.9 INDUSTRIAL HOSE

A. Each hose valve shall be supplied with a coupled 50-foot long industrial hose.

B. Hose shall be the same size (full line size) of hose valve, 1" or 1.5" diameter.
1. Hose shall be oil resistant, reinforced two ply, modified nitrile tube and cover.
2. Versigard synthetic rubber, RMA Class C. Reinforced with spiral synthetic yarn. Rated between -40 ^{o}F and 190 ^{o}F. Minimum pressure rating of 150 psi.
3. Provided with threaded end connections and spray nozzle.
4. GoodYear, Model 569-049 Sureline, or equal.

2.10 MECHANICAL RUBBER SEAL

A. Modular, mechanical type, consisting of interlocking synthetic rubber links shaped to continuously fill the annular space between the pipe and the wall opening.

B. EPDM seal element suitable for service to 250 degrees F, except seal element shall be silicone or viton suitable for 300 degrees F for aeration piping.

C. Composite pressure plates.

D. 316 stainless steel nuts and bolts.

E. Thunderline Link-Seal, or equal.

2.11 TAPPING SLEEVE

A. Manufacturers: One of the following or equal.

1. BTR Inc./Smith-Blair, Inc., Style 622 or 662.
2. Romac Industries, Inc., Style FTS 420.
3. Ford Metering Company, Model FTSC

B. Material

1. Tapping Sleeves: Steel construction, fusion bonded epoxy coating.
2. Bolts and Nuts: Type 304 stainless steel.
3. Nuts: Teflon coated.
4. Gaskets: EPDM.
5. Size of Tapped Boss: As indicated on the Drawings.

2.12 TAPPING VALVES

Tapping valve shall conform to AWWA C500. Tapping valves shall be manufactured by Mueller, or approved equal. Tapping valves shall have a Class 125, ANSI B16.1 inlet flange and a two inch (2”) square wrench nut.

2.13 PIPE SADDLES

A. Manufacturers: One of the following or equal.

1. BTR Inc./Smith-Blair, Inc., Style 317

2. Romac Industries, Inc., Style 202S

3. Ford Metering Company, Model FC202

B. Materials:

1. Pipe Saddles: Ductile iron.

2. Straps, Bolts, and Nuts: Type 304 stainless steel with Teflon coating on nuts.

3. Gaskets: EPDM

2.14 LINE STOPPING

Where indicated on the drawings, provide tapping sleeve, tapping valve, and line stopping equipment to temporarily stop flow in pipe.

2.15 CORPORATION STOPS

In accordance with AWWA C 800.

A. Manufacturers: One of the following or equal.

1. Ford

2. Mueller Company

2.16 CURB STOPS

A. Manufacturers: One of the following or equal.

1. Ford

2. Mueller Company

B. Description: Round way solid tee head stops.

2.17 COCKS

A. Gauge Cock:

1. Manufacturers: One of the following or equal.

2. Lunkenheimer Company, Figure 1178 or Figure 1180

B. Air Cock:

1. Manufacturers: One of the following or equal.
    a. Whitey Research Tool Company, Model B-42S4
    b. Hoke Inc., 7122G4B

C. Plug Cock Manufacturers:
1. One of the following or equal.
    a. Lunkenheimer Company, Figure 454

D. Plug Cock Design:
1. Bronze, straightway pattern complete with lever.

2.18 FLOOR DRAIN

A. Wade Model #W-9142, 12" x 12" x 8" cast iron sanitary floor drain with A.R.E. (acid resisting enamel) interior, aluminum dome strainer or flat strainer with funnel (for equipment drains), seepage flange, and nickel bronze hinged top. Provide deep seal trap (p-trap) and trap primer connection (suffix –6). Provide ¾ grate (suffix –16) or as specified on drawings.

2.19 CLEANOUTS

A. Floor cleanouts (FCO) in finished floors shall be Wade W-6000-Z series with nickel bronze cover and frame, adjustable top, and tapered bronze plug. Cleanouts in concrete floors shall be provided with standard tractor type covers. Cleanouts in carpeted areas shall be provided with carpet flange top. Cleanouts in tile floors shall be provided with square or round tops for tile or terrazzo as required.

B. Exterior Floor Cleanouts (FCO) in Unfinished Floor Areas: Same as floor cleanouts specified for finished areas, except heavy-duty scoriated cast-iron top suitable for heavy traffic conditions.
1. Manufacturers (one of the following or equal):
    a. Josam Company, 56040-5.
    b. Zurn Industries Inc., Z-1400-HD.

C. Yard Cleanouts (YCO) in Asphalt or Ground Areas: Floor cleanouts in unfinished floor areas specified before, for encasement in a concrete pad as indicated on the Drawings and flush with grade.

D. Provide membrane clamps for cleanouts installed in surfaces have waterproofing membranes installed.

2.20 POLYETHYLENE ENCASEMENT

All buried metallic piping, specials, and fittings shall be polyethylene encased, double wrapped. 8 mils thickness, sized to pipe diameter, ANSI/AWWA-C105/A21.5. Ends taped off with vinyl pipe wrap tape 10-mil vinyl tape manufactured by Calpico Inc. (Calpico VI-10) or equal.

Polyethylene Encasement- "Clear" non-colored polyethylene film, in either tubular or sheet form. The polyethylene film shall have a minimum thickness of 8 mils and at no point shall not be less than 10 percent of the nominal thickness. Polyethylene film shall be manufactured from a Type 1, Class A raw polyethylene material conforming to "Polyethylene Encasement for Ductile-Iron Piping for Water and Other Liquids" (ANSI/AWWA C-105/A21.5). Manufactured by Fee Spec's-LP378D Northtown, Fulton Enterprise Inc., Global Polymer Tech, Unisource, or equal.

PART 3 EXECUTION

3.1 FLEXIBLE COUPLINGS

A. Install where shown on Drawings and where required for ease of installation or removal of pipe, subject to approval of Engineer.

B. Pipelines 4 inches and larger extending from a concrete structure into earth shall have at least two flexible joints within 3 feet of the structure face.

C. Provide tension assemblies as specified in subsection 2.05 of this Specification where necessary to prevent separation of pipe due to internal pressures.

3.2 GROOVED COUPLINGS AND FITTINGS

A. Grooved systems may be used in lieu of flanged, welded or screwed joints for steel or cast pipe (grey or ductile) at Contractor's option, except for chemical service.

B. Install per manufacturer's directions.

C. The grooved coupling manufacturer's factory trained representative shall provide on-site training for contractor's field personnel in the use of grooving tools and installation of grooved joint products. The representative shall periodically visit the jobsite and review contractor is following best recommended practices in grooved product installation. (A distributor's representative is not considered qualified to conduct the training or jobsite visit(s).)

3.3 Hot Tapping

A. Hot tapping piping is not permissible, unless approved by Engineer. If approved, tapping shall be done in accordance with American Petroleum Institute (API) recommended practice 2201.

END OF SECTION

SECTION 15082

PIPING INSULATION AND FREEZE PROTECTION

PART 1 GENERAL

1.1 SUMMARY

Section Includes: Insulation for piping and related systems.

1.2 RELATED SECTIONS SPECIFIED ELSEWHERE

A. Section 10400 – Identifying Devices.

B. Section 11010 – General Mechanical Equipment Provisions.

C. Section 15010 – General Process and On-Site Utility Piping

1.3 REFERENCES

American Society for Testing and Materials (ASTM)

A. A53 - Specification for Pipe, Steel, Black and Hot-dipped, Zinc-Coated, Welded and Seamless.

B. C168 - Terminology Relating to Thermal Insulating Materials.

C. C177 - Test Method for Steady-State Heat Flux Measurements and Thermal Transmission Properties by Means of the Guarded-Hot-Plate Apparatus.

D. C335 - Test Method for Steady-state Heat Transfer Properties of Horizontal Pipe Insulation.

E. C518 - Test Method for Steady-State Heat Flux Measurements and Thermal Transmission Properties by Means of the Heat Flow Meter Apparatus.

F. C533 - Specification for Calcium Silicate Block and Pipe Thermal Insulation.

G. C534 - Specification for Preformed Flexible Elastomeric Cellular Thermal Insulation in Sheet and Tubular Form.

H. C547 - Specification for Mineral Fiber Pipe Insulation.

I. C552 - Specification for Cellular Glass Thermal Insulation.

J. C585 - Practice for Inner and Outer Diameters of Rigid Thermal Insulation for Nominal Sizes of Pipe and Tubing (NPS System).

K. C591 – Specification for Unfaced Preformed Rigid Cellular Polyisocyanurate Thermal Insulation.

L. C795 - Specification for Thermal Insulation for Use in Contact with Austenitic Stainless Steel.

M. C929 - Practice for Handling, Transporting, Shipping, Storage, Receiving and Application of Thermal Insulation Materials for Use in Contact with Austenitic Stainless Steel.

N. C1136 – Specification for Flexible, Low Permeance Vapor Retarders for Thermal Insulation.

O. D2310 - Classification of Machine-Made "Fiberglass" (Glass-Fiber-Reinforced-Thermosetting-Resin) Pipe.

P. E84 - Test Method for Surface Burning Characteristics of Building Materials.

Q. E96 - Test Methods for Water Vapor Transmission of Materials.

1.4 DEFINITIONS

A. Concealed: Piping above suspended ceilings and within walls, partitions, shafts, or service spaces and spaces not normally exposed to view but not buried.

B. Buried: Piping that is installed below buildings, foundations or finish grade, either in soil or encased in concrete in soil.

C. Exposed: Piping that is not concealed or buried.

D. K Factor: Thermal conductivity determined in accordance with ASTM C177 or C518 and expressed in units of [Btu-inch]/[hour-feet^2- degrees Fahrenheit].

1.5 SUBMITTALS

A. Product Data

1. Insulation Properties: Include K factor, thickness, density, operating temperature limits, tensile strength, compressive strength, moisture absorption, flame spread and smoke developed in accordance with ASTM E84 and corrosivity to stainless steel piping in accordance with ASTM C795.

2. Jacket Properties: Include covering material, cover thickness, tensile strength, tear strength, permeability per ASTM E96, flame spread and smoke developed in accordance with ASTM E84, closure type or devices, and accessories.

B. Manufacturer's Application Instructions: Include assembly and application drawings and detailed instructions.

1.6 DELIVERY, STORAGE, AND HANDLING

A. Store insulation materials under cover and protected from moisture.

B. Handle and store insulation for use on stainless steel in accordance with ASTM C929.

1.7 PROJECT CONDITIONS

As specified in Section 11010.

1.8 SEQUENCING AND SCHEDULING

Test piping and heat tracing and obtain acceptance of piping and heat tracing by Engineer prior to applying insulation.

PART 2 MATERIALS

2.1 PIPE INSULATION, GENERAL REQUIREMENTS

A. Insulation Thicknesses: Provide insulation thickness in inches in accordance with the following table:

	Nominal Pipe Diameters				
Temperature Service	**1 inch and less**	**1.25 to 2 inch**	**2.5 to 4 inch**	**5 to 10 inch**	**Over 10 inch**
Above 200 degrees Fahrenheit	2.0	2.5	3.0	3.5	3.5
105 to 200 degrees Fahrenheit	1.5	1.5	1.5	2.0	2.5
40 to 60 degrees Fahrenheit	0.5	1.0	1.0	1.5	2.0
Refrigerant and Fluids Below 40 degrees Fahrenheit	1.0	1.0	1.5	2.0	2.0
Heat Traced Lines	1.0	1.0	1.0	1.5	2.0

B. Insulation Types: Provide in accordance with the Insulation Schedule below.

2.2 PIPE INSULATION

A. Insulation, Type 1

1. Insulation Material: Closed cell elastomeric insulation in tubular form.
2. Temperature Range: Minus 40 degrees Fahrenheit to plus 180 degrees Fahrenheit.
3. K Factor at 75 Degrees Fahrenheit: 0.27.
4. Fire Rating: 25 or less flame spread, smoke developed 50 or less per ASTM E84.
5. Maximum Moisture Absorption, Weight Percent: 5.0.
6. Moisture Permeability: 0.10 perm-inch.
7. Joints: Seal with adhesive to form continuous water barrier.
8. Manufacturers: One of the following or equal:
    a. Armstrong World Industries, AP Armaflex.

B. Insulation, Type 2:

1. Insulation Material: Polymeric foam, open cell Melamine.
2. Temperature Range: Minus 150 degrees Fahrenheit to plus 350 degrees Fahrenheit.
3. K Factor at 75 degrees Fahrenheit: 0.26.
4. Average Density: 0.6 to 0.7 pounds per cubic foot.
5. Moisture Resistance: No damage, can be dried and reused.
6. Manufacturers: One of the following or equal:
    a. Accessible Products Co., Techlite Type 79.

C. Insulation, Type 3:

1. Insulation Material: Preformed mineral fiber in accordance with ASTM C547, Class 1.
2. Temperature Range: 0 degrees Fahrenheit to plus 450 degrees Fahrenheit.
3. K Factor at 100 Degrees Fahrenheit: 0.27.
4. Minimum Average Density: 10 pounds per cubic foot.
5. Maximum Moisture Absorption, Volume Percent: 0.2.
6. Manufacturers: One of the following or equal:
    a. Owens-Corning Fiberglas Corp., Fiberglas SSL-II
    b. Schuller, Micro-Lok FiberGlass Insulation

2.3 VAPOR BARRIERS

Vapor Barrier, Type 1:

A. Material: White kraft paper bound to aluminum foil meeting ASTM C1136, Type I.

B. Permeability: 0.02 perm or lower.

C. Maximum Flame Spread Rating: 25.

D. Edge Seal: Pressure sensitive tape lap seal.

E. Circumferential Joints: 4 inch wide tape or similar properties or 4 inch wide overlap with adhesive seal.

F. Manufacturers: One of the following or equal:

1. Owens-Corning Fiberglas Corp., all service jackets with Doublesure dhesive lap seal.

2. Schuller, Micro-Lok AP-T Plus.

2.4 INSULATION JACKETS

A. Jacket, Type 1:

1. Material: 28 ounces per square yard polyvinyl chloride on polyester fabric; total thickness 0.030 inches minimum.
2. Fire Rating: 25 maximum flame spread, smoke developed 30 or less
3. Color: As selected by the Engineer from manufacturer's standard colors.
4. Overlap: One-inch minimum at joints and fittings.
5. Joint Seal: Self sealing lap tape.
6. Fittings: Factory made with full thickness insulation.
7. Manufacturers: One of the following or equal:
    a. Accessible Products, Thermazip ASJ79 or 379.

B. Jacket, Type 2:

1. Material: 18 ounces per square yard Tedlar film laminated to Hypalon coated fiberglass fabric; total thickness 0.017 inches minimum.
2. Fire Rating: 25 maximum flame spread, smoke developed 30 or less.
3. Color: White.
4. Overlap: One-inch minimum at joints and fittings.
5. Joint Seal: Self-sealing lap tape; Tedlar tape at circumferential joints.
6. Fittings: Factory made with full thickness insulation.
7. Manufacturers: One of the following or equal:
    a. Accessible Products, Thermazip TMZ450.

C. Jacket, Type 3:

1. Material: Ultraviolet resistant polyvinyl chloride jacketing, 20-mil minimum thickness.
2. Fire Rating: 25 maximum flame spread, smoke developed 50 or less.
3. Color: White.
4. Overlap: One-inch minimum at joints and fittings.
5. Joint Seal: PVC solvent welded or adhesive as recommended by the manufacturer.

6. Fittings: Factory made with full thickness insulation.

7. Manufacturers: One of the following or equal:

   a. Schuller, Zestron 2000 PVC.

   b. Proto Corp., LoSMOKE PVC.

D. Jacket, Type 4

1. Material: Aluminum, Alloy 5005; 0.016 inch (26 gauge) minimum thickness.

2. Overlap: Overlap circumferential joints 4 inches minimum; overlap longitudinal joints 1 inch minimum; longitudinal joints oriented to minimize water entry.

3. Bands: 0.5 inch wide, 0.0508 inch (16 gauge) thick Aluminum, same alloy as jacket or 0.0179 inch thick Type 304 stainless steel; install on 18 inch centers, uniformly spaced and at all fitting joints.

4. Joint Seal: Apply waterproof adhesive at joints and overlaps.

5. Fittings: Custom fit of same materials.

6. Manufacturers: One of the following or equal:

   a. Childers Products.

   b. Premetco International.

2.5 HEAT TRACING

A. Provide Heat tracing for exposed lines where scheduled below.

B. Manufacturers: One of the following or equal:

1. Raychem Chemelex Auto-Trace, 3BTVCR2.

2. Chromalux Type SLR Rapid Trace, equivalent.

C. Heat tracing shall be self regulating, parallel, radiation Cross Linked type and shall vary its heat output relative to temperature of the pipe surface.

1. Suitable for 120 volt service

2. Maintain fluid temperature at 50 °F or above with minimum ambient temperature of 10 °F.

3. Meet the requirements of NEC.

4. Factory Mutual approved.

5. Conform to IEEE 515.

D. Cables: 16 AWG copper bus wire with self regulating semi-conductive core. Multi-layer coating system including: modified polyefin jacket over core, tinned copper shield over jacket, and final modified polyolefin jacket over tinned copper shield.

E. Temperature Control.

1. For each freeze protection system, provide pipe sensing thermostat in a NEMA 4 enclosure mounted to heat traced pipe with manufacturer's thermostat –to-pipe mounting bracket. Raychem AMC-1B or equal.

2. Provide thermostatic sensing bulb to measure pipe temperature.

3. Provide junction box for connection of power to heat trace system. Raychem PMKG-JLP or equal.

F. Contractor shall route 120 volt power in conduit from nearest convenient source whether indicated on the drawings or not.

2.6 VALVE BOXES, CHEMICAL PULL BOXES, VAULTS, AND BOXES

For all boxes and vaults located in the field, install 6-inch thick foam (R30) insulation beneath hatch or lid for freeze protection. Also, insulate all pipes, valves, and fittings inside the vault or box.

PART 3 EXECUTION

3.1 EXAMINATION

A. Pipe Testing: Test piping as specified in Section 15010 as applicable.

B. Verify that piping surfaces are dry and free of loose scale, rust, dirt, oil, or water prior to applying insulation. When specified, paint or coat pipe surfaces as specified in Section 09900 prior to installing insulation.

3.2 APPLICATION

A. Apply insulation and cover materials in accordance with manufacturer's written instructions.

B. Apply insulation in smooth, clean manner with tight and finished smooth joints. Do not use torn, cracked, or chipped sections. Fit insulation tightly against surfaces.

C. Apply and test heat tracing where scheduled or indicated on the Drawings before installing insulation.

D. Apply sealant or cement when previous applications or adhesives and cement have thoroughly dried.

E. Apply insulation to permit expansion or contraction of pipelines without damage to insulation or jacketing.

F. Terminate preformed pipe jackets or covering at sufficient distance from flanges to permit removal of bolts.

G. Overlap flange and flanged fitting insulation on adjacent pipe covering by at least 2 inches.

H. Insulate valves up to packing gland only.

I. Provide continuous insulation through and over pipe supports and provide protection saddles at supports.

J. Extend insulation against insulation end protection shields or covers so that insulation voids do not exist and provide water tight end seals and covers where insulation terminates.

K. Insulate pipeline strainers to permit removal of strainer basket without disturbing insulation on strainer body.

L. Provide continuous pipe insulation and covering through sleeves or openings in walls and floors.

M. Apply premolded pipe insulation with extended legs when used on pipe traced with either tubing or electric cable type.

N. Apply piping identification on jackets as specified in Section 10400.

3.3 REPAIR

Restore existing insulation and surfaces disturbed or damaged by application of new pipe insulation.

3.4 INSULATION AND HEAT TRACING SCHEDULE

A. All exposed piping 2-inches or smaller shall be insulated with type 1 insulation and type 4 jacket.

B. Additionally, provide insulation for the following services::

Service Designation (2)	Location (1)	Insulation Type	Vapor Barrier Type	Jacket Type(4)	Service Temp. Deg F	Notes
Potable, Non-Potable and Reclaimed Water Lines	Exposed	1	None	4	Below 40	1,2,3
Pumped Drain	Exposed	1	None	4	Below 40	1,2
Instrument Air	Exposed	3	None	4	20-280	1,2

Notes:

1. E. or C. means exposed or concealed piping.
2. Refer to Section 15010 Piping Schedule for required carrier pipe.
3. Heat Trace Exposed where indicated on the drawings.
4. Provide jacket type, as listed in schedule, for all installation applications regardless of indoor or outdoor installation. For services that state “none” in schedule, provide type 4 jacket only when installed outdoor.

END OF SECTION

SECTION 15094

HANGERS AND SUPPORTS

PART 1 GENERAL

1.1 DESCRIPTION

The work of this section consists of providing necessary materials and installation to properly support all pipe, electrical conduit, ductwork and miscellaneous hardware.

1.2 RELATED WORK SPECIFIED ELSEWHERE

A. Section 01300 – Submittals

B. Section 01610 – Seismic Design Criteria

C. Section 01615- Wind Design Criteria

D. Section 09900 – Painting and Finish Schedule

E. Section 11010 - General Mechanical Equipment Provisions

F. Section 15010 - General Process and Onsite Piping Provisions

1.3 QUALITY ASSURANCE

Standards:

A. AA - Aluminum Association

B. AISC - American Institute of Steel Construction

C. ASTM - American Society for Testing and Materials

D. AWS - American Welding Society.

1.4 SUBMITTALS

A. In accordance with Section 01300.

B. Shop Drawings: Submit certified drawings showing all details of pipe, electrical conduit, ductwork and miscellaneous support devices. Shop drawings shall include all details of construction, anchor size, hanger rod sizes, bar sizes, weld sizes, mounting dimensions and overall space requirements.

1. Submit manufacturer's literature to verify support of 5 times the weight or thrust of the piping without failure. Where standard tables are not available, provide calculations signed and stamped by a Civil or Structural Professional Engineer licensed to practice in the state where the project is located. All calculations shall be provided in English units.

2. All exposed and above grade piping shall be vibrationally isolated and restrained by a Seismic Restraint System. Provide calculations in accordance with specification sections 01610 and 01615.

a. The Typical Details provided in the construction documents for supporting mechanical equipment, electrical equipment and distributed systems (i.e. piping, conduit, ducting, other) are to be used for general guidance, minimum requirements, and layout for support systems. Design for these support systems shall be provided in the submittal. The design shall include details and calculations stamped and signed by a Civil or Structural engineer registered in the State of California.

b. Submit layout drawing(s) showing where submitted supports will be used. Layout drawings shall document how the pipe support will be used to resist lateral loads, perpendicular and parallel to the pipe, the specific height and spacing in that area, where the support will connect to flanges (e.g. pipe friction cannot be used to resist lateral loads)- to ensure the calculated maximum loads/spacing provided are appropriate (and to ensure contractor is installing correct detail in appropriate location).

3. Submit documents supporting manufacturer's published values (load capacities, max design loads, deflection from stress, etc.) in terms of how the values were obtained (independent testing laboratory, testing agency, or government agency).

C. Manufacturer's Literature: Submit manufacturer's literature for all channels, clevis hooks, straps, hanger rod, anchors, fasteners, and related material used in the utility support systems.

PART 2 MATERIALS

2.1 HANGERS AND SUPPORTS

A. Hangers and supports shall be factory fabricated units with published load limits and meet Manufacturer's Standardization Society of the Valve and Fittings Industry Standard Practice SP58.

B. Provide hanger or support as indicated on drawings, or select an appropriate hanger or support as shown on the "PIPE SUPPORT DETAILS" Drawing.

C. Hangers or supports shall be B-Line Systems, Inc.; Grinnell Corp., or equal.

2.2 FRAMING SUPPORT SYSTEMS

A. As called out on the drawings and as required to provide adequate support, use framing systems as manufactured by B-Line Systems, Highland, IL 62249; Unistrut Corporation of Wayne, MI 48184; or equal.

B. The load capacities of parts, connections and assemblies shall meet or exceed those published in the latest framing manufacturer's engineering catalog and supplementary bulletins.

C. Unless otherwise noted on the drawings, all framing members and fittings in non-corrosive or dry areas shall be hot-dipped galvanized steel. Paint entire framing support system in accordance with specification section 09900. Nuts and screws shall be electro-galvanized. All painted channels and fittings shall be carefully cleaned and phosphated. Immediately after phosphating, a uniform coat of highly effective rust inhibiting acrylic enamel paint shall be applied by the electro-deposition process and thoroughly baked. Color shall be Unistrut "Perma-Green", B-Line "Dura-Green per Federal Standard 595a, color number 14109 (dark limit V-). The resulting finish will withstand 400 hours salt spray when tested in accordance with ASTM designation B-117.

D. All framing members and fittings for humid, wet or corrosive areas shall be stainless steel or fiberglass. Cut ends of fiberglass shall be sealed per manufacturer’s recommendations. Nuts and screws shall be stainless steel, fiberglass or nylon as approved by the Engineer.

E. Continuous insert embedment channel shall be B-Line B52I; Unistrut P-3300 Series, Caine Strut No. C-3450/70, or equal.

F. For stainless steel pipe, all pipe support materials, framing members, and fittings shall be stainless steel.

2.3 CABLE TRAYS

Shall be B-Line Series 444; Unistrut tray system 3L2 Series, Globetray HDS Series, in widths as shown on the Drawings and with 18-inch rung spacing. Tray shall be supported on six foot maximum centers and designed to support a safe uniform allowable load of 200 pounds per lineal foot. Side rails shall be 3- or 4-inch high, 0.0747" (14 gauge) galvanized steel.

2.4 MISCELLANEOUS METAL FABRICATIONS

Unless shown otherwise on the drawings, all miscellaneous metals used for hangers and supports in non-corrosive areas shall be hot-dip galvanized in accordance with ASTM A123 and 304 stainless steel passivated for corrosive and wet areas, as specified in Section 05500. Vent holes shall be provided in closed tube type members in an unobtrusive location as required to prevent any danger of explosion during the galvanizing process.

PART 3 EXECUTION

3.1 PIPE SUPPORTS AND HANGERS

A. General

1. Pipes and ductwork shall be supported as shown on the Drawings, otherwise use appropriate type of support.
    a. The Typical Details provided in the construction documents for supporting mechanical equipment, electrical equipment and distributed systems (i.e. piping, conduit, ducting, other) are to be used for general guidance, minimum requirements, and layout for support systems. Design for these support systems shall be provided in the submittal. The design shall include details and calculations stamped and signed by a Civil or Structural engineer registered in the State of California.
2. Supports shall be used to meet all criteria herein, regardless of whether or not indicated on the drawings. No pipe shall be left unsupported whenever a change in direction of line or flow takes place. At least one support shall be provided between every two couplings. Supports shall be provided for all valves, meters, or other metallic appurtenances.
3. Securely fasten all piping to building construction with approved hangers, supports, guides, anchors and sway braces to maintain pipe alignment and prevent sagging, noise and excessive strain due to uncontrolled movement under operating conditions.
4. Relocate any hangers as necessary to correct unsatisfactory conditions that may become evident when system is put into operation.
5. Supporting of piping by wire, rope, wood or other makeshift devices will not be permitted.

6. Burning of holes in beam flanges or narrow members will not be permitted.

7. All exposed and above grade piping shall be vibrationally isolated and restrained by a Seismic Restraint System. Provide calculations in accordance with specification sections 01610 and 01615.

    a. In addition to the above listed specification requirements, sway bracing of non-resiliently supported piping shall also be designed to ensure compliance with SMACNA Guidelines for Seismic Restraint of Mechanical Systems and fire protection piping per NFPA requirements.
    b. Where supported by pipe hangers from the ceiling or where lateral displacement of pipe is probable, pipelines shall be seismically braced laterally at every 20 feet (minimum), and braced longitudinally and laterally every 40 feet (minimum) and at 90 degree bends. The minimum seismic bracing shall consist of 3/8-inch steel plate welded to pipe hanger, ½-inch diameter all threaded rod, ½-inch diameter flexible connector and eye rod inserted in the ceiling. Design shall be based on most restrictive requirement.

8. Fasten hanger rods to structural steel members with suitable beam clamps.

9. Protect pipe insulation at every hanger, support or guide of insulated piping with inserts and shields.

B. Manifolding

1. Parallel runs of piping, except for fire protection piping may be supported on trapeze hangers, spaced as required for the smallest pipe carried.

2. Piping in chases shall be supported on channel framing.

3. Channel framing shall be selected to support 5 times the weight or thrust of the piping without failure in accordance with the manufacturer's standard ratings. Submit details for approval.

    a. Where standard tables are not available, provide calculations signed and stamped by a Civil or Structural Professional Engineer licensed to practice in the state where the project is located. All calculations shall be provided in English units.

C. Support Hanger Spacing

1. Maximum spacing for horizontal piping supports shall be as follows:

Material	Size	Spacing
Steel Pipe and Stainless Steel Pipe	1” and smaller	5 feet
	1-1/4” to 2”	7 feet
	Larger than 2”	10 feet
Copper Pipe	1" and smaller	5 feet
	1-1/4" and larger	8 feet
PVC Pipe	1" and smaller	4 feet
	1-1/4" to 2"	4-1/2 feet
	2-1/2" to 3-1/2"	5 feet
	4" to 5"	6 feet
	6" and larger	7 feet
Ductile iron pipe	All sizes	8 feet
Fiberglass pipe	Less than 3"	8 feet
	3" and larger	10 feet

2. Where building structure does not permit the specified spacing the Contractor shall provide additional adequate support. Location and details shall be submitted for approval.

3.2 ELECTRICAL CONDUIT SUPPORT

See Division 16 for additional requirements, the most stringent of the listed spacing shall apply.

3.3 MISCELLANEOUS HARDWARE

Support as shown. When not shown, support as required to form a solid, rigid, strong installation satisfactory to the Engineer.

3.4 GALVANIZING TOUCH-UP

Cold Galvanize all field cut bare metal not designated to be painted.

END OF SECTION

SECTION 15100

VALVES

PART 1 GENERAL

1.1 DESCRIPTION

The work of this section consists of furnishing and installing valves used to throttle, isolate, and control flow in piping systems. The specification is broken into six basic valve types: general, water, wastewater/sludge, air, chemical, and specialty valves.

1.2 RELATED WORK SPECIFIED ELSEWHERE

A. Section 01300: Submittals

B. Division 15: Piping Materials

1.3 QUALITY ASSURANCE

Reference, American Society for Testing and Materials (ASTM).

1.4 SUBMITTALS

A. Submit shop drawings in accordance with Section 01300.

B. Materials list and catalog data sheets naming each product to be used identified by manufacturer and type number.

C. Submit Operations and Maintenance Manuals for approval for all valves, in accordance with Section 01680.

PART 2 MATERIALS

2.1 VALVES - GENERAL

A. All valve construction, materials, and pressure ratings shall be selected to suit the system in which installed. Pressure rating and manufacturer's name shall be cast on each valve body. Where specified, valves shall be supplied fully packed with Teflon impregnated packing. Where possible, valves shall be of one manufacturer.

B. Stems of all bronze valves shall be silicon bronze or similar alloy to prevent de-zincification. Alloy shall have minimum tensile strength of 60,000 psi, minimum yield point of 24,000 psi per ASTM B584.

C. Valves shall be furnished full line size unless specifically called out to be of reduced size. Flanges for valves may be raised or plain face. Flanges for valves for water working pressures of 175 psi or less shall be faced and drilled to 125 lb. standard dimensions.

D. Manual Operators: For manual operators, pull shall be less than 40-pounds on handwheels and 25-pounds on cranks. Contractor shall provide detailed calculations to confirm stem diameter and operator size.

E. Within buildings, all isolation valves (SOV) 2" and smaller shall be 1/4 turn ball valves. SOVs 2-1/2" and larger shall be butterfly valves.

F. Valves installed immediately adjacent to flanged equipment and flanged specialties shall be flanged, regardless of size.

G. Valves in welded piping shall be flanged, regardless of size.

H. Where valves are designed to have power operators, the operator shall be installed and tested at the factory prior to shipment to the job site.

I. For project with larger than 12-inch diameter valves:

   1. Provide one portable mechanical valve operator (drill and tripod) for, per details below.

   2. Where valves over 12-inch diameter are required to be supplied with handwheel, provide spare AWWA 2-inch square operating nut with ground level position indication or weld nut directly to handwheel for use in conjunction mechanical valve operator.

J. The naming of a manufacturer in this specification is not an indication that the manufacturer's standard equipment is acceptable in lieu of the specified component features. Naming is only an indication that the manufacturer may have the capability of engineering and supplying a system as specified.

2.2 VALVES FOR WATER SERVICE

A. GATE VALVES (GTV)

1. 2½ inches and smaller: Mueller; Clow; Stockham B122, or equal with manufacturer's standard bronze, solid wedge disc, rising stem and screwed ends, rated for 200 psi working pressure.

2. 3 inches and larger: non-rising stem, resilient wedge flanged valves with handwheels and shall conform to the requirements of AWWA C509 CLASS C.

3. Buried gate valves 2 inches and larger: non-rising stem, resilient seat valves with 2-inch square operating nut. Valves shall have mechanical joint, hub or flanged ends as required by the nature of the installation and shall conform to the requirements of AWWA C509 Class C. Provide one-piece Schedule 40 galvanized steel pipe extension stems pinned to gate valve stem where operating nut is more than 30" below grade, unless shown otherwise on the Drawings.

4. Manufactures for 3-inches and larger gate valves shall be Mueller, M&H Style 4067, Weilong-Fivalco Series 3226, or equal.

B. CHECK VALVES (CV), (PCV)

1. Swing Check Valves (CV) - 2½-inch and smaller: bronze, screwed cap, bronze disc, Y-pattern, 200 psi working pressure, screwed ends. Crane Co. No. 37; Stockham B-319, or equal. Solder ends: Stockham B-309. Flanged ends: Stockham G-931

2. Swing Check Valves (CV) - 3-inch and larger: cast iron body, bronze faced disc, stainless steel hinge pin, outside lever and weight, 150-175 psi water working pressure, flanged or grooved ends. Valves shall have outside lever on side of valve to suit installation and/or be reversible in the field. Valves shall be able to be easily modified in the field to attach cushioning system if required. M & H 159-02; Victaulic Series 317; Milliken, CCNE Series 8000 or equal.

3. Plastic Check Valves (PCV) - Ball check, PVC Type 1, Grade 1, viton seals, 150 psi at 73°F water, flanged or true union ends. Chemtrol BC series; TVI, or equal. Or true union.

C. BALL CHECK VALVES FOR SUBMERSIBLE PUMPS (BCV)

1. Suitable for handling sewage and installed as shown on the Drawings.

2. Cast iron body, ASTM A159, Class 35.

3. Flanged ends, ANSI B16.1, Class 125.

4. Hollow steel ball with vulcanized nitrile rubber covering.

5. 150-psig working pressure.

6. Flygt Corporation Model HDL, Type 5087.

D. BALL VALVES (PBV) AND (BV)

1. Standard ball valves are indicated by letters BV. These are to be in compliance with SST BV spec below. Alternative materials are only acceptable if specifically indicated on drawings, such as plastic ball valves (PBV) and shall be in compliance with spec below.

2. Plastic Ball Valves (PBV) - sizes 4-inches and smaller: true union design, PVC Type 1, Grade 1, Teflon seats and Viton or EPDM "O" rings, full ports, 150 psi at 73°F water. Valves used for sodium hypochlorite shall be suitable for this service (drilled or modified as needed). Hayward, Chemtrol TU series, Hills-McCanna "McCannaplast", or equal.

3. Stainless steel Ball Valves (BV) - sizes 2" and smaller: shall have full ports and screwed ends. Stainless Steel body. TFE seats and seals. Type 316 stainless steel trim. Jamesbury; Hills-McCanna "McCannaflo", Worcester, or equal.

4. Stainless steel Ball Valves (BV) Larger than 2":

   a. Ball: Full port, single piece, solid. Solid 316, or 17-4 PH stainless steel conforming to requirements of ASTM A 351 Grade CF8M, or ASTM A 351 Grade CB7CU.

   b. Stem: Blow-out proof (when assembled) using T-shaped configuration for positive retention. 304, 316, or 17-4 PH stainless steel.

   c. Body: Three-piece, vertically split, end entry. Cast 316 stainless steel conforming to requirements of ASTM A 351 Grade CF8M

   d. Seat: Cartridge design consisting of a seat ring with reinforced teflon or PEEK seat insert, and body seal. Spring loaded seats to assure ball/seat contact at low pressure.

   e. Stem Seat: Thrust washer packing ring, two-rings for tight seal.

   f. Jamesbury; Hills-McCanna "McCannaflo", Worcester, or equal.

5. Three-Way stainless steel Diversion Ball Valves (BV) – size 2" and smaller: shall have stainless steel body and ball, reinforced TFE seats and seals with blow-out proof stem design. Apollo series 700-640; Watts B-6780-MI, Worcester, or equal.

E. BUTTERFLY VALVES (BFV) sizes less than 3 inches

1. 200 psi wog, full lug style, iron body, field replaceable EPDM seat, 416 stainless steel stem, aluminum bronze disc, or nylon coated ductile iron disc, no painting of disc to stem connections 12" and under, 2" through 6" - lever lock operated: Stockham, or Bray Series 31.

F. HOSE VALVES (HB) or (HV)

1. 1" Hose Valves

   a. Bronze body and trim, composition disc.

b. 1-inch NPT inlet, 1" pipe hose threads outlet, or as shown on Drawings.

c. Cast bronze threaded cap with chain for hose outlet.

d. Nibco no. T-113-HC; Grinnell 3000 HC or equal.

e. Supplied with 50-foot long hose, see below.

2. 1½ " Angle Hose Valves

a. Bronze body and trim, composition disc

b. 1½" NPT inlet, 1½" pipe hose threads outlet with 1½" x 1" hose thread reducer, or as shown on the drawings.

c. Cast bronze threaded cap with chain for hose outlet.

d. Nibco Angle Valve; Grinnell 3220 or equal.

e. Supplied with 50-foot long hose, see below.

3. Each hose valve shall be supplied with a coupled 50-foot long industrial hose. Hose shall be the same size (full line size) of hose valve, 1" or 1.5" diameter.

a. Hose shall be oil resistant, reinforced two ply, modified nitrile tube and cover. Versigard synthetic rubber, RMA Class C. Reinforced with spiral synthetic yarn. Rated between -40 ºF and 190 ºF. Minimum pressure rating of 150 psi.

b. Provided with threaded end connections and spray nozzle.

c. GoodYear, Model 569-049 Sureline, or equal.

G. FREEZELESS YARD HYDRANTS (AUTOMATIC DRAINING)

1. Manufacturers: One of the following or equal:

a. Woodford Manufacturing, Model Y2, or equal. Size as indicated on the Drawings.

2. Each yard hydrant shall include:

a. Immediate water flow in any condition, automatic draining,

b. Backflow prevent with two independent check valves that drains when hose is removed.

c. An adjustable link and rod guide.

d. Flow finder with cam lock.

e. One piece variable flow plunger with large cushion and automatic drain feature to open drain and prevent freezing. Close at any flow to prevent wasting water.

f. Casing: Galvanized pipe. Drain tapped 1/8" NPT. Brass Nozzle.

H. AIR VALVES FOR WATER SERVICE

1. General: Air valves shall be of the size shown on the drawings with flanged or screwed ends to suit the installation as shown on the drawings. Valves shall be fabricated stainless steel, cast iron body, or reinforced nylon body with stainless steel trim or EPDM role seal with polypropylene float. Valves shall be designed for working pressure of 150 psi unless noted otherwise. Valve seals shall be suitable for the pressure range. A valve schedule is included on the drawings. All valves that are scheduled on less than 50 psi pipelines shall have soft seats and valves that are on over 50 psi pipelines shall have standard seats, to minimize leaking.

2. Air Release Valve (ARV): Valves shall be designed to vent accumulating air while the system is in operation and under pressure.

   a. The ARV for the potable water system (1W) shall be ARI S-050 with ¼ inch orifice, or equal.

3. Air and Vacuum Valve (AVV): Valves shall be designed to pass large quantities of air either out of or into the pipeline during filling or draining operations.

4. Combination Air Valve (CAV): Valve shall perform both as an air release valve and as an air and vacuum valve as described above. The valves shall provide controlled venting to prevent water hammer and surges in the pipelines

   a. The CAV valves 3" and larger shall have flanged connections in accordance with ANSI B16.1. The valves shall have cast iron or ductile iron body with stainless steel float or polypropylene float. The seat shall be properly rated for the working pressures expected in the pipeline (less than 50 psi) and the orifices shall be properly sized in accordance with the manufacturer's recommendations. The CAV valves shall be manufactured by APCO, Series S-1500C, with 200A air relief valve, 3/16 inch orifice, or ARI D-60 with D-040 air relief valve, or equal.

   b. The CAV less than 3" shall be stainless steel or ductile body, and shall be threaded-end (NPT) as noted on the Drawings. The internal float and plug shall be stainless steel, the needle and seat shall be Buna-N and properly rated for working pressures in pipeline. Provide Apco Series 140C, or equal. Provide necessary isolation valves and fittings for flushing with clean water and draining the valves for maintenance purposes. Provide a vent cap with insect screen mounted to top of vacuum valve.

5. Manufacturer: APCO, A.R.I., Vent-o-mat; or equal.

I. BACKFLOW PREVENTERS (RP)

1. The backflow preventer shall be a Reduced Pressure Principle and shall include a tightly closing resilient-seated shut-off valve on each end of the body. The assembly shall be fitted with four properly located resilient-seated test cocks.

2. The assembly shall have two independent and internally loaded check valves and a pressure differential relief valve located between the check valves.

3. The backflow preventer shall be suitable for supply pressure up to 175 psi and water temperature from 33 to 180°F.

4. The backflow preventer shall meet the requirements of the following standards: USC's FCCC and HR Manual, Sec. 10, ASSE 1013, AWWA C-5111, IAPMO, and CSA B65.5.

5. Approved manufacturers are: Conbraco, Watts, Febco, Flomatic Valves

J. PRESSURE REDUCING VALVES (PRV) (For water service)

1. Valve shall be suitable for water supply pressures up to 300 psi and a maximum temperature of 180°F. Bronze body construction with inlet and outlet NPT unions and gauge tapping with pressure gauge. Coordinate pressure range and setpoint with equipment prior to ordering. Provide a pressure reducing valve in accordance with manufacturer's instructions for each dishwasher, glasswasher, and similar items and where indicated on drawings. Pressure range shall be 10-35 psi for dishwashers as indicated by the manufacturer. Equivalent to Watts series N35BDU-LP-GG.

2. Approved Manufacturers: Watts, Conbraco, and Wilkins.

2.3 VALVES FOR WASTEWATER/SLUDGE SERVICE

A. PLUG VALVES (PV)

1. General: Plug valves shall be of the non-lubricated, eccentric-type, rated for 175 psi working pressure for valves 12-inches and smaller and 150 psi for valves 14-inches through 20-inches. Valves 4-inches through 20-inches be full port area (greater than 90% of the pipe area).

2. Connections: Screwed, flanged, grooved, or mechanical joint as shown on the drawings or required for the installation. Flanges shall be faced and drilled to the requirements of ANSI B16.1, Class 125.

3. Materials

a. Body: Cast iron, ASTM A126, Class B.

b. Seat: Welded, 90% pure nickel overlay (1/8-inch minimum).

c. Bearings: Type 316 stainless steel ASTM A743, permanently lubricated.

d. Plug: Cast iron, ASTM A126, Class B or ASTM A536 Grade 65-45-12.

e. Plug Facing: Chloroprene Neoprene, Acrylonitrite Butadiene Buna-N, or EPDM.

f. Shaft Seals: Shall be V-ring or U-cup packing that is either externally adjustable or self-adjusting.

4. Operators

a. Unless otherwise shown or required, operators on exposed valves shall have open and closed position stops, position indicator, type as follows:

1) 3-inches and smaller: fixed lever

2) 4-inches: lever on 2-inch square operating nut

3) 6-inches and larger: enclosed worm gear with handwheel. Maximum 80 lb. rim pull to actuate the valve at its full bi-directional operating pressure.

4) Chainwheel actuators shall be provided where shown on drawings.

b. Unless otherwise shown or required, all buried valves shall have gear operators with 2-inch square nut inputs and shall be sealed against water intrusion. Exposed nuts and bolts on buried actuators shall be stainless steel. Buried valves shall have plugs that open upward. Where shown on the drawings, provide stem extension and above ground gear handwheel operator.

5. Plug Valves shall be DeZurik PEF, Val-Matic, Weilong-Fivalco Flowcentric, Milliken, Victaulic Series 365, or equal.

B. CHECK VALVES (CV), (PCV)

1. Swing Check Valves (CV) - 2½-inch and smaller: bronze, screwed cap, bronze disc, Y-pattern, 200 psi working pressure, screwed ends. Crane Co. No. 37; Stockham B-319, or equal. Solder ends: Stockham B-309. Flanged ends: Stockham G-931

2. Swing Check Valves (CV) - 3-inch and larger: cast iron body, bronze faced disc, stainless steel hinge pin, outside lever and weight, 150-175 psi water working pressure, flanged or grooved ends. Valves shall have outside lever on side of valve to suit installation and/or be reversible in the field. Valves shall be able to be easily modified in the field to attach cushioning system if required. M & H 159-02; Victaulic Series 317; Milliken, CCNE Series 8000 or equal.

C. IN-LINE DUCK BILL CHECK VALVES

1. The entire valve shall be ply reinforced neoprene throughout the body, disc and bill, which is cured and vulcanized into a one-piece unibody construction. Valve shall allow passage of flow in one direction while preventing reverse flow.

2. A separate valve body or pipe used as the housing is not acceptable. The valve shall be manufactured with no metal, mechanical hinges or fasteners, which

would be used to secure any component of the valve to the housing. Once installed, the valve shall not protrude beyond the face of the structure or end of the pipe.

3. The outside diameter of the upstream and downstream sections of the valve must be circumferentially in contact with the inside diameter of the pipe. The entire valve shall fit within the pipe inside diameter.

4. Slip-in style valves will be furnished with a set of 316 stainless steel expansion clamps. The clamps, which secure the valve in place, shall be installed in the upstream or downstream cuff of the valve, as shown on drawings, and shall expand outwards by means of a turnbuckle. Each band shall be pre-drilled allowing for the valve to be pinned and secured into position in accordance with the manufacturer's installation instructions.

5. Valves shall be manufactured by Red Valve Company, Tideflex model series CMC slip-in CheckMate Valves, or equal.

D. AIR VALVES FOR SLUDGE SERVICE

1. General:

   a. Air valves shall be of the size shown on the drawings with flanged or screwed ends to suit the installation as shown on the drawings. Valves shall be fabricated stainless steel, cast iron body, or reinforced nylon body with stainless steel trim or EPDM role seal with polypropylene float. Valves shall be designed for working pressure of 150 psi unless noted otherwise. Valve seals shall be suitable for the pressure range. A valve schedule is included on the drawings. All valves that are scheduled on less than 50 psi pipelines shall have soft seats and valves that are on over 50 psi pipelines shall have standard seats, to minimize leaking.

2. Sewage Air Release Valves (SARV): Valves shall be designed to vent accumulating air while the system is in operation and under pressure. Valve shall be fabricated of stainless steel. A.R.I. Model D-020, or equal.

3. Sewage Air and Vacuum Valve (SAVV): Valves shall be designed to pass large quantities of air either out of or into the pipeline during filling or draining operations.

4. Combination Sewage Air Valve (SCAV): Valve shall perform both as an air release valve and as an air and vacuum valve as described above. The valves shall provide controlled venting to prevent water hammer and surges in the pipelines

   a. The SCAV valves shall be stainless steel or ductile body, and shall be threaded-end (NPT) for 3" or less as noted on the Drawings. The internal float, stem, and spring mechanism shall be stainless steel the upper float shall be polypropylene with reinforced nylon-EPDM-SST plug assembly. Valve shall be suited for continuous operation in sewage

applications with a duration of 6 months or longer between required cleanings. For 2" and smaller, provide Apco Series 400CP, A.R.I. Model D-020, or equal. Provide necessary isolation valves and fittings for flushing with clean water and draining the valves for maintenance purposes. Provide a vent cap with insect screen mounted to top of vacuum valve.

5. Manufacturer: APCO, A.R.I., Vent-o-mat; or equal.

2.4 SPECIALTY VALVES

A. SOLENOID VALVES (SOV, SOL V)

1. ¾ inches and smaller.
2. Forged brass body, Buna "N" seals and disc or diaphragm.
3. Orifice diameter equal to or greater than pipe size.
4. Epoxy resin encapsulated, waterproof, high temperature coil, 120 volt or as indicated on the drawings, single phase, 60 cycle, explosion-proof enclosure, normally-closed design, continuous duty rated.
5. Jackes-Evans Mfg. Co. Series J; Asco No. 8210, or equal.

2.5 VALVE ACCESSORIES

A. VALVE BOXES (VB) IN PROCESS AREAS AND PROCESS BUILDINGS

1. Inside dimension of concrete box shall accommodate valve body with a minimum of 4-inches clear on all sides of valve.
2. Cast iron face and traffic weight lid, labeled for service used.
3. Brooks 3RT; Christy G5, or equal.

PART 3 EXECUTION

3.1 GENERAL

All valves and gates shall be installed in the manner and location shown on the plans and in strict accordance with manufacturer's recommendations.

3.2 BURIED

A. Buried valves with operating nuts shall be provided with covered valve boxes at grade. Where operating nut would otherwise be more than 30-inches below grade, stem extensions shall be provided to bring operating nut 6 to 12 inches below grade.

3.3 PLUG VALVES

Unless otherwise approved by the Engineer, plug valves shall be installed with shaft horizontal, seat upstream and plug opening upward.

3.4 BUTTERFLY VALVES

Unless otherwise approved by the Engineer, butterfly valves shall be installed with shaft horizontal.

3.5 HOSE VALVES

Hose valves shall be installed in locations shown on the plans. Unless otherwise dimensioned, hose valves set adjacent to structures shall be located three inches from the wall of the structure. Hose valve outlets shall face away from the structures. Hose valves on the potable water system shall have vacuum breakers.

3.6 PINCH VALVES

A. The Contractor shall require the manufacturer to furnish the services of a factory representative who has complete knowledge of proper operation and maintenance to inspect the final installation and supervise a test run of the equipment.

B. After installation, pinch valve shall be field-tested to insure that all items of equipment are in compliance with the Specifications and operating properly.

END OF SECTION

SECTION 15400

PLUMBING

PART 1 GENERAL

1.1 WORK INCLUDED

A. Plumbing Fixtures

B. Plumbing Specialties

C. Plumbing Equipment

1.2 RELATED SECTIONS

A. Section 01300 – Submittals

B. Section 11604 – Safety Equipment

1.3 REFERENCES

A. National Electrical Manufacturers Association (NEMA).

B. Plumbing and Drainage Institute (PDI).

C. International Association of Plumbing and Mechanical Officials:

D. Uniform Plumbing Code (UPC)

1.4 SYSTEM DESCRIPTION

System Requirements:

A. Includes in plumbing system fixtures; vent, drain, and water piping; connections; cleanouts; fittings, accessories and testing for complete and functional system.

B. Except in details, piping is indicated on the Drawings in diagrammatic form. Sizes and locations are indicated on the Drawings, however, not every offset and fitting, nor every structural difficulty that will be encountered in the Work has been indicated.

C. As part of the Work, modify piping alignment indicated on the Drawings as necessary to avoid structural or mechanical obstructions and to clear the work of other trades.

D. Furnish such parts and pieces necessary to provide a complete and operational system.

1.5 QUALITY ASSURANCE

Regulatory Requirements:

A. Perform work under this Section in accordance with the Uniform Plumbing code issued by the International Association of Plumbing and Mechanical Officials, and in accordance with applicable laws and regulations, including requirements for accessibility, energy, water conservation, and health including related requirements for water fountains and coolers.

B. Where provisions specified in these Specifications or the design indicated on the Drawings are in conflict with the Uniform Plumbing Code or laws or regulations, the code and the laws or regulations take precedence over the specified provisions and design.

1.6 MANUFACTURES

The plumbing equipment schedules are shown on the drawings. The following is a list of additional equipment approved for use on this project:

A. Lavatories, Water Closets, Urinals, Showers: Eljer, American Standard, Kohler, Crane/UR

B. Shower Valves: Symmons, Powers, Moen, Bradley

C. Thermostatic Mixing Valves: Symmons, Powers, Leonard, Lawler

D. Sink: Eljer, Kohler American Standard, Crane, Just, Elkay, Designers Choice

E. Electric Water Cooler: Haws, Halsey Taylor, Oasis, Sunroc, Elkay

F. Roof Drain, Floor Drain, Sanitary Floor Drain, Wall Carriers, Cleanouts, Water Hammer Arrestors: Josam, J.R. Smith, Ancon, Rockford, Wade, Zurn, Watts

G. Water Heaters: Rheem/Ruud, Morflo/American, Lochinvar, A.O. Smith, Precision, Teledyne Laars, Weben-Jarco, Bock, Bradford White, State.

H. Faucets: Symmons, Delta, Chicago Faucet Co., T&S Brass and Bronze Works, Cambridge Brass, Powers, Bradley, Kohler, Sloan

I. Flush Valves: Zurn, Sloan

J. Pumps: Grundfos, Hydromatic, Paco, Bell & Gosset, Amtrol, Armstrong, Taco

K. Expansion Tanks: Amtrol, Watts, John Wood Co. (ASME ONLY)

L. Trap and Supplies: McGuire, Brass Craft, Eastman, CS&B

M. Water Closet Seats: Church, Bemis, Olsonite.

N. Trap Primer Valves: Precision Plumbing Products, Mifab

O. Shower Enclosures: Aqua Glass, Lasco, Aqua Bath, Crane, Fiat

P. Emergency Fixtures: Haws, Bradley, Chicago, Encon

Q. Flexible Gas Connections: Dormont, T&S Brass and Bronze Works

R. Insulation Kits (for P-traps and supplies): Truebro, McGuire, Plumberex

S. Hosebibbs: Chicago, Woodford, Mifab, Nibco

T. Wall Hydrants: Woodford, Wade, Zurn

U. Neutralization Tanks: Orion, Schott, Nalgene, Enfield

V. Laboratory Turrets, Faucets: Chicago Faucet Co., T&S Brass and Bronze Works, Cambridge Brass, Orion (DI water only)

W. Wash Sink: Bradley model WF2503

X. Electric Water Heater: Eemax Model EX 180

1.7 SUBMITTALS

Also refer to Section 01300. Before beginning work, provide shop drawings on the following items:

A. Plumbing Fixtures

B. Drains

C. Water Heaters

D. Pumps

E. Storage Tanks

F. Plumbing Specialties

G. Expansion Tanks

H. Wash Sinks

I. Other items as directed by the Owner

PART 2 MATERIALS

2.1 MATERIALS

A. General: Manufactured Units: Fixture fittings and piping which are exposed shall be heavy-duty chrome.

B. Accessories:

1. Stops:

a. Fixtures, except showers, shall have stops at the fixtures' service.

b. Stops shall be chrome-plated straight pattern compression stops or chrome-plated angle pattern compression stops.

2. Drain Piping and fittings:

a. Per specification section 15010.

2.2 PLUMBING FIXTURES AND DEVICES

A. General: Furnish and install all plumbing fixtures as indicated below. All fixtures shall be white and be of the same manufacturer unless otherwise noted. All fixtures to have accessible stops and all faucets shall have renewable seats, discs, and metal indexed handles. All fixture trim shall be chrome plated and by the same manufacturer unless otherwise noted.

B. Cleanouts:

1. Floor cleanouts (FCO) in finished floors shall be Wade W-6000-Z series with nickel bronze cover and frame, adjustable top, and tapered bronze plug. Cleanouts in concrete floors shall be provided with standard tractor type covers. Cleanouts in carpeted areas shall be provided with carpet flange top. Cleanouts in tile floors shall be provided with square or round tops for tile or terrazzo as required.

2. Wall cleanouts (WCO) shall be Wade W-8560-E series with 8480-R. Cast iron tee with countersunk brass plug drilled for cover screw and round stainless steel access cover.

3. Exterior Floor Cleanouts (FCO) in Unfinished Floor Areas: Same as floor cleanouts specified for finished areas, except heavy-duty scoriated cast-iron top suitable for heavy traffic conditions.

    a. Manufacturers (one of the following or equal):

        1) Josam Company, 56040-5.

        2) Zurn Industries Inc., Z-1400-HD.

4. Yard Cleanouts (YCO) in Asphalt or Ground Areas: Floor cleanouts in unfinished floor areas specified before, for encasement in a concrete pad as indicated on the Drawings and flush with grade.

5. Provide membrane clamps for cleanouts installed in surfaces have waterproofing membranes installed.

C. Fixture Specifications: Certain fixtures for process areas are specified below. Also refer to the fixture schedules on the plans for additional fixtures required for non-process areas of the project.

1. Water Closet (Chemical Building): Kohler “Highcliff” Model #K-4368, 1.6 gallon per flush 17-1/2" high vitreous china siphon jet, elongated water closet with 1-1/2" top spud and bolt caps.

2. Seat: Church Model #9500 SSC white heavy duty solid high impact plastic elongated open front seat less cover complete with #3145 stainless steel hinge posts with combination self-sustaining and concealed check.

3. Flush Valve: Sloan Royal Model #111 exposed closet flush valve, chrome plated with metal oscillating non-hold-open ADA compliant handle, dual filtered bypass, 1" I.P.S. screw driver Bak-Chek angle stop with free spinning vandal resistant cap, sweat solder adapter with cast set screw wall flange, adjustable tailpiece, high back pressure vacuum breaker flush connection and spud coupling for 1-1/2" top spud with wall and spud flanges. 1.6 gallon flush.

D. Floor Drains in Non-Process Areas and Buildings: Wade Series Model #W-1100-STD ” size as indicated on the drawings, outlet cast iron floor drain with flange, integral reversible clamping collar, seepage openings, and adjustable 6" round nickel bronze strainer with vandal resistant screws. Provide deep seal trap (p-trap) and trap primer connection.

E. Sanitary Floor Drain: Wade Model #W-9142, 12" x 12" x 8" cast iron sanitary floor drain with A.R.E. (acid resisting enamel) interior, aluminum dome strainer or flat strainer with funnel (for equipment drains), seepage flange, and nickel bronze hinged top. Provide deep seal trap (p-trap) and trap primer connection (suffix –6). Provide ¾ grate (suffix –16) or as specified on drawings.

F. Tankless Water Heater: As scheduled on the plans.

1. Tankless Electric Water Heaters

a. Thermostat-Control, Instantaneous Electric Water Heaters: Comply with UL 499 for tankless electric (water heater) heating appliance.

1) Construction: Copper piping or tubing complying with NSF 61 barrier materials for potable water, without storage capacity.

a) Connections: ASME B1.20.1 pipe thread.

b) Pressure Rating: 150 psig.

c) Heating Element: Resistance heating system.

d) Temperature Control: Thermostat.

e) Safety Control: High-temperature-limit cutoff device or system.

f) Jacket: Aluminum or steel with enameled finish.

2) Support: Bracket for wall mounting.

3) Capacity and Characteristics (unless shown otherwise on the drawings):

a) Voltage: 480V, 3 phase

b) Power: 72 kW

c) Amperage: 87A/phase

d) The water heater shall heat 23 GPM at a temperature rise of 21 degrees F.

e) Inlet/Outlet Fittings: 1.25” NPT Fitting

G. Floor Drains and Equipment Drains in Process Areas or Buildings:

1. Equipment and Floor Drains: Provide with adjustable strainer head, floor level grate, 4-inch diameter funnel extension and provided with no-hub outlet and nickel bronze top.

a. Manufacturers (one of the following or equal):

1) Josam Company, 30000-A, combination drip drain, less clamping collar.

2) Zurn Industries Inc., ZN-415 strainer.

2. Funnel Extension:

   a. Manufacturers (one of the following or equal):

      1) Josam Company, E-2.

      2) Zurn Industries Inc., Zn-238.

3. Other floor drains with no-hub outlet and nickel bronze Type B strainer:

   a. Manufacturers (one of the following or equal):

      1) Josam Company, 30000-A universal floor drain with adjustable strainer, less clamping collar.

      2) Zurn Industries, Inc., ZN-415.

H. Strainers with 3-inch drains shall be 6-inch diameter, and strainers with 4-inch drains shall be 8-inch diameter.

I. Heavy-Duty Floor Drains with Sedimentation Bucket:

1. 12-inches square with coated cast-iron body, grate, and slotted sediment bucket.

   a. Manufacturers (one of the following or equal):

      1) Josam Company, 35570.

      2) Zurn Industries Inc., ZN-610.

J. Floor Sinks for Indirect Wastes:

1. Full, half, or quarter grate, 12-inches square by 6-inches deep, acid resisting enamel interior and exterior, no-hub outlet, pipe size as indicated on the Drawings.

   a. Manufacturers (one of the following or equal):

      1) Josam Company, 49030.

      2) Zurn Industries Inc., ZN-345-6.

K. Trap Primer Valve (TPV-1): Precision Plumbing Products Model #PR-500 "Prime Rite" brass automatic drip trap primer valve with 1/2" NPT connections. Note: Maximum four floor drain traps per valve.

L. Roof Drain (RD): Wade Model #W-3000-42-52-53 cast iron roof drain with flange, flashing ring with gravel stop and cast iron mushroom dome, provide optional deck clamp and bearing pan. (Provide extension as required to accommodate roof thickness.)

M. Overflow Roof Drain (ORD): Same as R.D. except Wade Model #W-3000-D-42-52-53 with 2" solid dam.

N. Sink Hose Bibb (all other hose bib see specification section 15100): Chicago Faucet Co. Model #387 polished chrome plated 3/4" with vandal proof lock shield removable tee handle and Chicago model #E27 vacuum breaker.

O. Wall Hydrant Type Hose Bibb (all other hose bib see specification section 15100): Zurn Model #Z-1350-5-12, 3/4" anti-siphon moderate climate narrow wall hydrant with stainless steel box and cover with bronze body, top inlet connection, cylinder lock, and integral backflow preventer. Note: this fixture requires a minimum 4" wall.

P. Thermostatic Mixing Valve TMV-1 (Without Cabinet): Symmons "Tempcontrol" Model #5-400A-P-W-RC 3/4" inlets, 1" outlet mixing valve with check stops, removable cartridge with strainer, stainless steel piston, liquid fill thermal motor with bellows, volume control shut off valve, dial thermometer and all fittings and unions. Provide polish chrome finish, wall mounting bracket and spare cartridges for un-interrupted service. 20 GPM at 5 psi pressure drop.

Q. Eyewash/Shower: Per Section 11604.

R. Wash Sink For Process Areas: Bradley model WF2503, 36” semi-circular, off line vent with supplies from below, standard height, foot control valve, manual mixing valve, metal clad liquid soap dispenser, terreon bowl, soap stone gray, paper towel dispenser.

S. Sample Sink For Process Areas: Floor Mounted Service Sink: 20” by 24”, 4 support legs, White color and resistant to fading and abrasion. Sink shall have 1.5 inch drain opening. Manufactured by Florestone Products Inc, or equal. Provide faucet that delivers 0.5 gpm; JR Smith, Zurn, or equal.

T. Trench Drains For Process Areas:

1. Trench Drain Channels:

   a. Trench drain channels shall be made of precast polymer concrete with a top width of 6.1 inches, radiused bottoms and nominal lengths of ½ or 1 meter. All channels shall interlock with tongue and groove connections with adjoining channels.

   b. Each channel shall have horizontal anchoring ribs to mechanically lock the channel into the floor slab or pavement.

   c. Channels shall have available vertical cut outs for 4-inch or 6-inch discharge and available 4-inch or 6-inch horizontal outlet end caps. Standard channels shall be a minimum 4-inches deep and shall have a built-in bottom slope of 0.6 percent. Piccolo trench drains shall be 2.70 inches deep with flat slope.

2. Channel Grates: Channel grates shall be for heavy duty service made of Vinylester FRP. Grates should be securely locked down with built-in channel lock blocks. Locking mechanism shall be designed so as to provide an obstruction-free trench for

maintenance and cleaning as well as to prevent concrete from entering channels during installation.

3. Catch Basins: Catch basins shall be precast polymer concrete with FRP grates. Any trench drains entering catch basins shall interlock fully with tongue and groove connections.

4. Joint Sealers: To prevent leakage, joints between channels, catch basin connections, etc., shall be sealed with an adhesive recommended by the manufacturer.

5. Manufacturer's: Trench drains shall be as manufactured by ACO Polymer Products, Inc., Chagrin Falls, OH, Polydrain ABT, Inc., Troutman, N.C., or equal.

2.3 PLUMBING SPECIALTIES

A. All water heaters shall be equipped with self-closing temperature and pressure relief valves. Approved manufacturers: Watts, Conbraco, Wilkins.

B. All water heaters shall be provided with a thermometer.

C. Water hammer arrestors shall be all stainless steel construction, bellows assembly type. Bellows shall be nested and welded. Unit shall be tested and certified in accordance with PDI-WH201 and by A.S.S.E. to Standard 1010.

D. Trap primer valves shall be equivalent to Precision Plumbing Products Model #PR-500 with distribution unit as required.

E. Expansion tanks shall have a steel outer shell, pre-charged air chamber with standard air valve, stainless steel system connection, heavy-duty butyl diaphragm and rigid polypropylene liner.

PART 3 EXECUTION

3.1 GENERAL

All changes in the plumbing work made after letting of the contract, in order to comply with the applicable codes or requirements of the plumbing inspectors, Health inspectors, Utility Regulatory Agency and similar shall be made without additional cost to the Owner.

Should the Plumbing Contractor or any of the Subcontractors perform any work that does not comply with the requirements of the applicable Building Codes, State Laws, Local Ordinances and Industry Standards, he shall bear all costs arising in correcting the deficiencies, as approved by the Engineer.

3.2 PREPARATION

A. Rough-in fixtures and accessories in accordance with the dimensions supplied by the manufacturers of the fixtures.

B. General:

1. Mount fixtures and accessories without cutting of finish surface.

2. Make cross connections between piping for domestic water supply and piping for contaminated sources only by means of appropriate connection devices that prevent backflow from the contaminated sources to the domestic water supply.

   Provide connection devices approved by the Public Health authorities having jurisdiction over the Work.

3. Conceal plumbing piping unless otherwise indicated on the Drawings or specified in the Specifications.

4. Furnish and install vents required in drainage piping as part of the plumbing system, in accordance with Laws and Regulations.

5. Insulate hot water piping.

C. Piping:

1. In accordance with specificaiton section 15010.

2. Encase in concrete underground piping under structures.

3. Support aboveground horizontal piping at not more than 5 foot spacing.

4. Above Ground Vertical Piping:

   a. Install vertical piping in chases in the wall where the wall is plastered; where the wall is not plastered, vertical piping may be installed in chases in the wall or may be run exposed.

   b. Support vertical pipes at the base and at each floor.

5. Fittings:

   a. Make junctions with sanitary tees or with wyes, with brass screw plug cleanouts at accessible locations at changes in direction.

   b. Make changes in pipe size with reducing fittings.

   c. Make changes in direction by use of 45 degree wyes, half wyes, long sweep ¼ bends, 1/5, 1/6 1//8, or 1/16 bends, except that sanitary tees may be used on vertical stacks; short ¼ bends or elbows 3-inches in size or larger may be used on drain or waste lines where the change in direction of flow is from horizontal to vertical, and on the discharge from water closets.

   d. Cleanouts: Same size as the pipe, except that cleanout plugs larger than 4-inches will not be required.

D. Plumbing Piping Accessories:

1. Provide cleanouts of the same size as the size of the waste and drain piping on which cleanouts are installed, up to 4-inches in diameter. Provide cleanouts 4-inches in diameter on waste and drain piping larger than 4-inches diameter.

2. Provide traps at all fixture and equipment connections to the sanitary drainage system. Install traps as near to the fixtures as possible.

3. Sizes of equipment drains and of floor drains shall be as indicated on the Drawings.

4. When indicated on the Drawings, cut holes in heavy-duty floor drain grate for a drain pipe from equipment or other source.

3.3 FIELD QUALITY CONTROL

A. Test lines as specified and in accordance with Uniform Plumbing Code.

B. Test water piping with water under a pressure of 100 pounds per square inch.

C. Repair and correct defective work disclosed by testing. Repeat testing until defective work is corrected.

3.4 CLEANING

Flush piping and leave clean, as required by Public Health authorities having jurisdiction over the Work.

3.5 INSTALLATION

A. Secure each water line where it penetrates partitions to serve fixtures, shower arms, hose bibbs and similar items. Wrap all piping in block walls or penetrating concrete with 10 mil polyethylene tape or covering with polysleeve.

B. Set hose bibbs 18 inches above finished grade, unless otherwise indicated. Adjust height as required to line-up bottom or top edge of wall hydrants with masonry seams where applicable. Grout water-tight any wall penetrations with non-shrinking grout. Wall hydrants shall be installed level and square with face flush with finished wall face. Thoroughly clean after installation.

C. Seal fixtures to walls, floors, and counters using a sanitary type, one part, mildew resistant white 100% silicone sealant.

D. Cleanouts shall be installed in accessible locations. Wall cleanout access covers shall be installed above bottom course of tile when installed in tiled walls. Floor and ground cleanouts shall be installed with covers set flush to finished grade or floor.

E. During construction, floor drains, fixtures, and equipment shall be provided with adequate protection against damage and sealed against entrance of construction debris. Floors shall not be washed into floor drains as part of the construction clean-up process.

3.6 PLUMBING SPECIALTY INSTALLATION

A. Extend discharge of temperature and pressure relief valve full size to daylight with elbow down between 6" and 18" above finished grade or as indicated on plans.

B. Temperature and pressure relief valves shall be installed such that the sensing element is within 6” of the high water level of the tank. Extend discharge of temperature and pressure relief valve full size to daylight with elbow down between 6" and 18" above finished grade or as indicated on plans.

C. Install each thermometer in a 304 stainless steel bimetal type thermowell with the entire sensing element in the flow of water and a min. pipe size of 1-1/4" for entire length of element. Provide extension necks for insulation piping. Operating ranges shall be selected to assure nominal temperature readings at the midpoint thereof.

D. Provide a water hammer arrestor on all cold water lines serving fixtures using flush valves, solenoid valves or quick closing devices, sized in accordance with P.D.I. Standard WH-201 for the total number of fixtures served. Provide access door as required.

E. Provide trap primers on floor drains where noted with approved trap primer valve connections. Provide ball valve for isolation of trap primer valve. Provide access doors as required. When possible, trap primer valves shall be located behind the same access panel as shock absorber. Install trap seal primer valves with valve outlet piping pitched down toward drain trap a minimum of 1/8" inch per foot (1 percent) and connect to floor drain body, trap, or inlet fitting.

F. Provide an expansion tank sized in accordance with manufacturer’s recommendations for all hot water heating vessels which store hot water.

3.7 FLASHINGS

A. All vent stacks passing through the roof shall be flashed with 4 lb. per square foot lead sheets extending around the pipe 8" in all directions at the roof surface and turned down 2" into the pipe opening.

B. Provide 4 lb. per square foot lead sheets for all roof drains and overflow roof drains (minimum 24" x 24" cut for drain and clamped at collar). Coordinate installation with roofer.

END OF SECTION

SECTION 16010

ELECTRICAL

PART 1 GENERAL

1.1 SCOPE OF WORK

A. The Contractor shall install, ready for use, the electrical system as specified in Division 16 and shown on the Contract Drawings. This document describes the function and operation of the system and particular components, but does not necessarily describe all necessary devices. All components and devices shall be furnished and installed as required to provide a complete operable and reliable system for accomplishing the functions and meeting the performance set forth hereinafter.

B. If an "or equal" manufacturer is proposed by the Bidder, the cost of any required engineering redesign, and the cost of any electrical, mechanical or structural modifications to adjacent and interfacing equipment necessary to make the several parts fit together, licensing fees and additional construction and other costs resulting from the proposed "or equal" equipment shall be included in the Bid. If the proposed "or-equal" manufacturer is not accepted by the Owner after the Award of Contract, the Bidder shall furnish and install the named equipment at no additional cost to the Owner. See specification section 01300 for further information on submitting equal products.

C. Furnish all required labor, materials, project equipment, tools, construction equipment, safety equipment, transportation, test equipment, incidentals, and services to provide a complete and operational electrical system as shown on the Drawings, included in these Specifications, or required for fully operating facilities.

D. Examine the Specification and Drawings for mechanical equipment and provide all starters, circuit breakers, switches, pushbuttons and appurtenances which are not specified to be with the mechanical equipment. Erect all electrical equipment not definitely stated to be erected by others, furnish and install conduit, wire, cable, and make connections required to place all equipment in complete operation.

E. Contract Elementary Drawings do <u>not</u> show all electrical interfaces, lockouts, etc. required for motor control. These Drawings show general layout and have made provisions for interlocks, solenoid valve control, etc. and are only typical. Contractor is responsible for examining the Contract Drawings for all motor control interfaces, temperature switches, solenoid valves, float switches and device lockout, requirements. The Contractor's submitted elementary diagrams shall show all motor controls and interlocks for the specific

piece of equipment. Provide a separate set of elementary diagrams for each similar group of equipment. It is within the Contractor's scope of work to submit elementary diagrams that not only show the panel wiring, but also include the field interlocks, motor heaters, protective devices, valve controls, etc. The Contractor's Elementary submittal Drawings shall also show field terminal block numbers for each of the field interlocks and valve controls.

F. The major areas in the Division scope of work are shown on the Contract Drawings and are designated on the Division 16 Index Specifications which include both the furnishing and installation of:

1. Control Panels modifications containing programmable logic controller (PLC) for controlling the pumps, aerators, drives, etc. and other miscellaneous devices.
2. Conduits, and the field interconnection wiring between the equipment, pumps, MCCs, main switchboard, control panels, panelboards, field devices, etc. as shown on plans for both sites.
3. All necessary miscellaneous shut off, sample, and calibration valves to sensors.
4. Trenching, backfilling, compaction, and resurfacing for all new underground conduit routes.
5. Building electrical devices and receptacles.
6. Grounding system and equipment grounding.
7. Supply concrete pads and supports for electrical and instrumentation equipment.
8. Installation of primary devices, equipment and instruments, are not completely detailed on Contract drawing plan sheets.
9. Removal and disposal of excess materials from excavation, pavement removal and demolition work.
10. Pico Controller programming is the responsibility of the System Supplier.

G. No items for panels shall be shipped loose for later field installation in control panel, enclosures, etc. without prior written approval of the Owner. Incomplete panels arriving at the jobsite shall be returned by the Contractor to the shop to complete fabrication at no additional cost to the Owner when directed by the Owner. Panels that were shipped to site without a factory test will be returned by the Contractor to the shop to complete factory test no additional cost to the Owner.

H. Provide all necessary hardware, conduit, wiring, fittings, and devices to connect the electrical equipment provided under other Sections. The following shall be done by the Contractor at no additional cost to the Owner:

1. Provide additional devices, wiring, conduits, relays, and isolators to complete interfaces of the electrical and instrumentation system.
2. Changing normally open contacts to normally closed contacts or vice versa.

3. Adding additional relays to provide more contacts as necessary to carry out work specified.

4. Other work implied by the Contract documents.

5. Provide larger circuit breakers, starter, conduit and wire as required for the horsepower of the supplied equipment when the supplied equipment is larger than that specified, at no additional cost to the Owner or lug adapters as necessary when connecting to the wires listed in the Conduit and Wire routing schedule.

I. The following Specifications incorporate specific equipment and devices that are preferred by the Owner because of their serviceability, because of the local availability of labor, parts and materials, or because of the ability of the Owner to umbrella the equipment under existing maintenance Contracts; however, favorable alternatives proposed in writing during the submittal process will be reviewed by the Owner as to whether they are acceptable as approved equals.

J. The decision of the Engineer governs what is acceptable as a substitution or approved equal. If the Engineer considers it necessary, tests to determine equality of the proposed substitution shall be made, at the Contractor's expense, by an unbiased laboratory that is satisfactory to the Engineer. No reason will be released on why a substitution was not acceptable. No Contract extension will be granted due to the substitution being rejected.

K. All electrical equipment and materials, including installation and testing, shall conform to the applicable codes and standards listed in this and other Sections. All electrical work shall conform with the latest edition of the National Electric Code (NEC) and California Electrical Code (CEC). Nothing on the Drawings or in the Specifications shall be construed to permit work or materials not conforming to these codes and standards.

L. Electrical Contractor is encouraged to attend the pre-bid job walk and it is highly recommended Contractor shall have accomplished the following:

1. Thoroughly examine existing conditions before submitting his bid proposal to perform any work. He shall compare site conditions with data given on the plans or in these Specifications. No allowance shall be made for any additional costs incurred by the Electrical Contractor due to his failure to have examined the site or to have failed to report any discrepancies to the Owner prior to bid.

2. Verify all measurements and conditions and shall be responsible for the correctness of same. No extra compensation will be allowed because of differences between work shown on the Drawings and measurements at the site.

M. It is the Electrical Contractor's responsibility to be fully familiar with the existing conditions and local requirements and regulations.

N. Any major deviations in location and conduit routing that the Electrical Contractor makes without the express written review or direction of the Engineer, shall be considered to have been made at the Electrical Contractor's sole responsibility. Such deviations made by the

Electrical Contractor shall be reflected on the Electrical Contractor supplied "Record Drawings" and Conduit Schedule. The Owner will reimburse the Electrical Engineer and the Owner and then will deduct an amount equal to this reimbursement from the Electrical Contractor's contract for all engineering, drafting, and clerical expenses associated with updating the Record Drawings and Conduit Schedule due to any major unauthorized changes.

O. All control panels, control stations and instrument enclosures shall be a listed approved assembly and labeled by an approved testing shop. This is to be an entire assembly (a complete unit) to include all components and enclosures as an assembly, controls. etc.

P. The Contractor shall field verify all existing conditions, equipment, wires, conduit, etc., as required to complete the project.

1.2 CODES AND STANDARDS

A. All electrical/instrumentation equipment and materials, including installation and testing, shall conform to latest adopted edition of the following applicable codes and standards:

1.	ANSI	American National Standards Institute, Inc.
2.	CEC	California Electrical Code
3.	EIA	Electronics Industries Association
4.	ETL	Electrical Testing Laboratories
5.	FM	Factory Mutual
6.	IEEE	Institute of Electrical and Electronics Engineers
7.	ICEA	Insulated Power Cable Engineers' Association
8.	ISA	International Society for Measurements & Control Standards (formerly Instrument Society of America)
9.	NEC	National Electric Code, 2020 Edition
10.	NEMA	National Electrical Manufacturers Association
11.	NETA	Acceptance Testing Specifications for Electrical Power Distribution Equipment and Systems, International Electrical Testing Association
12.	NESC	National Electrical Safety Code
13.	NFPA 820	National Fire Protection Agency, Standard for Fire Protection in Wastewater and Collection Facilities
14.	OSHA	Occupational Safety and Health Act Standards
15.	UL	Underwriter's Laboratories, Inc.

B. The revisions of these codes and standards in effect on the date of issuance of the Contract Documents shall apply.

C. Codes and standards referenced shall be considered minimum acceptable work.

D. In instances where two or more codes are at variance, the most restrictive requirements shall apply.

E. Nothing on the Drawings or in the Specifications shall be construed to permit work or materials not conforming to the preceding codes and standards.

F. All work shall also be performed in accordance with the State, County or Owner standards, and local Utility codes.

G. The Contractor shall furnish without extra charge any additional material and labor which may be required for compliance with these codes and standards, even though the work is not explicitly mentioned in the Specifications or shown on the Contract E- Series Drawings.

H. Amperage listed on the single-line Drawings for motors are per NEC Table 430.250 and may not necessarily match that of the equipment supplied. It is the electrical system supplier and Contractor's responsibility to furnish equipment sized for the motors supplied for this project at no additional cost.

1.3 ELECTRICAL CONTRACTOR QUALIFICATIONS

A. It is the intent of this Division that the complete responsibility for management and installation of the electrical and instrumentation required for this project be by the Electrical Contractor. This responsibility includes, but is not limited to, supervision and coordination of work performed by the System Supplier. Uncertified electricians shall not perform electrical work for which certification is required.

B. Contractor shall submit the proposed Electrical Sub-Contractor and System Supplier with bid documents that will be used on this project.

C. The Electrical Contractor shall meet the following minimum qualifications:

1. Has a current C-10 Electrical Contractor's License.

2. Has regularly engaged in similar electrical Contracting for the municipal water and wastewater industry.

3. Has performed work of similar or greater complexity on at least five previous projects under one company name which is the present company name.

4. Has all persons performing work as electricians certified by the California Apprenticeship Council per California Labor Code Section 3099.

1.4 SYSTEM SUPPLIER QUALIFICATIONS

A. General:

1. All switchboards, panels, MCCs, panelboards, panelboard transformers and PLC hardware, shall be supplied by one system supplier. All panels and instrumentation listed for Division 16 in all Division 16 appendix Indexes shall be supplied by the same System Supplier. This includes, but not limited to, all work necessary to select, furnish, supervise installation, calibrate, program, and place into operation all transmitters, instruments, controllers, alarm equipment, monitoring equipment, and accessories as specified herein. The system supplier shall not subcontract any portions of the equipment provisioning with the exception of fire and security alarm systems without written approval of Owner.

2. The system supplier shall have an on-staff project engineer with prior experience on similar sized projects. This project engineer shall coordinate the technical aspects of this project and prepare the submittals and drawings. This project engineer's name, address, and phone number shall be provided within the first week after notice to proceed. The system supplier project engineer shall attend all coordination meetings and be on-site when requested by the Owner's Resident Engineer.

1.5 CONTRACT DOCUMENTS

A. The Contract Drawings and Specifications are intended to be descriptive of the type of electrical system to be provided; any minor details missing in either shall not relieve the Contractor from the obligations there under to install in correct detail any and all materials necessary for a complete operational system at no additional cost.

B. The Contract Drawings are generally diagrammatic; exact locations of electrical products shall be verified in the field with the Owner's Resident Engineer. Except where special details on Drawings are used to illustrate the method of installation of a particular piece or type of equipment or materials, the more restrictive of the two shall take precedence in the event of conflict.

C. The Contract Electrical elementary, elevation and one-line diagrams are the basis of the electrical system to be provided and are for reference only. It is the Contractor's responsibility to adjust and make minor revisions to the diagrams as necessary for an operational system at no additional cost to the Owner. Additional isolators, relays, wiring, terminal blocks, etc., shall be provided for an operational system at no additional cost to the Owner. Contractor shall also modify starter size, breaker size, etc. at no additional cost to the Owner, if such changes are the direct result of the equipment selected by the Contractor.

D. Location at facilities of new equipment, inserts, anchors, panels, pull boxes, conduits, stub-ups, and fittings for the electrical system are to be determined by the Contractor and Engineer at time of installation. Contractor shall make minor adjustments to locations of electrical equipment required by conditions and coordination with other trades at no additional cost. Minor adjustments are defined as those adjustments required due to equipment size changes or variations between different equipment suppliers.

E. The Conduit and Wire Routing Schedule, wire fill, and number of conduits are based on the best information available. It is the Contractor's responsibility to modify the conduit schedule based upon Shop Drawings for the actual equipment. Such modifications in conduit sizes and numbers of conductors shall be at no additional cost to the Owner and shall be approved by Owner, if such changes are the direct result of the equipment selected by the Contractor. A copy of the Conduit and Wire Routing Schedule and Electrical plans showing conduit routing shall be updated weekly by the Contractor. Progress payments will be withheld if during monthly checks it is found that the contractor fails to maintain the Conduit Schedule updates.

F. Electrical and instrumentation, conduit and wire lengths shown on circuit Drawings are approximate and do not show changes in elevation or vertical risers. The Contractor is responsible for determining actual lengths for bidding and installation purposes.

G. All equipment shall be installed and located so that it can be readily accessed for operation and maintenance. The Engineer reserves the right to require minor changes in location of equipment, without incurring any additional costs. These minor changes are changes which would provide adequate clearance and work areas in front of and around equipment.

H. Where conduits are shown as "home runs" on the Contract Drawings or stated to be furnished, but not explicitly shown as part of the scope of work, the Contractor shall provide all fittings, boxes, wiring, etc., as required for completion of the raceway system in compliance with the NEC and the applicable Specifications in this Section.

I. No changes from the Contract Drawings or Specifications shall be made without written approval of the Engineer. Should there be a need to deviate from the Contract documents, submit written details and reasons for all changes to the Engineer for review within thirty days after the award of the contract.

J. The resolution of conflicting interpretation of the Contract documents shall be as determined by the Engineer.

K. The Electrical Contractor shall maintain a separate set of neatly hand-printed or typed and accurately marked set of Record Documents, consisting of spreadsheets, specifications and full size blue-line Electrical and Instrumentation Contract Drawings. These documents are to be used specifically for recording the as built locations and layout of all electrical and instrumentation equipment, routing of raceways, vaults, junction and pull boxes, and other diagram or document changes. These Record documents shall be kept up-to-date during the progress of the job, with all "change orders," submittal modifications, and construction

changes shown and stamped with "As-Built" at end of job. These Record documents shall not be used for daily construction use and shall not contain any mark-ups that are unrelated to as-built corrections. Updated drawings are to be submitted with pay estimates to show progress of revisions, changes which affects pay request.

1. The following lists the record documents that shall be submitted as "as-built" by the Electrical Contractor:
    a. E-Series Drawings.
    b. Panelboard schedules.
    c. Conduit and Wire Routing Schedule.
        1) A copy of the Conduit and Wire Routing Schedule and Electrical Contract Drawings showing conduit routing shall be updated weekly by the Contractor.
        2) Progress payments will be withheld if during monthly checks it is found that the Contractor fails to maintain the Conduit Schedule updates.
    d. Lighting and Fixture Schedule.
    e. Duct banks and their routing with offset measurement and indicated changes in depths.
2. Record documents shall be kept current weekly with all change orders, submittal modifications, and construction changes shown. Record Documents shall be subject to the inspection by the Engineer at all times, progress payments or portions thereof may be withheld if Record Documents are not accurate or current.
3. When documents are changed, they shall be marked with erasable colored pencils using the following coloring scheme:
    a. Additions – red
    b. Deletions – green
    c. Comments - blue
    d. Dimensions – black
4. Show the following on the Electrical (E-Series) Record Contract Drawings by dimension from readily obtained base lines:
    a. Exact location, type and function of electrical and instrumentation equipment and devices.
    b. Precise routing and locations of underground conduits, ductbanks, vaults, pullboxes, junction boxes, etc. that make-up the raceway system.
    c. Show the dimensions, location and routing of electrical work which will become permanently concealed.

d. Show complete routing and size of any significant revisions to the systems shown.

5. Prior to acceptance of the work, the Contractor shall deliver to the Engineer one set of record full-size Electrical and Instrumentation series Record Contract Drawings and spreadsheets neatly marked and accurately showing the information required above.

1.6 SUBMITTAL AND DRAWING REQUIREMENTS

Provide electrical and instrumentation submittals per Section 01300 - Submittals.

1.7 COORDINATION

A. The Contractor shall coordinate the electrical work with the other trades, code authorities, utilities, and the Engineer, with due regard to their work, towards promotion of rapid completion of the project. If any cooperative work must be altered due to lack of proper supervision of such, or failure to make proper provisions, then the Contractor shall bear expense of such changes as necessary to be made in the work of others.

B. The Contractor shall examine the architectural, mechanical, structural, electrical, and instrumentation equipment provided under other Sections of this Contract in order to determine the exact routing and final terminations for all conduits and cables. The exact locations and routing of cables and conduits shall be governed by structural conditions, physical interferences, and the physical location of wire terminations on equipment. Conduits shall be stubbed up as close as possible to equipment terminals.

C. Manufacturer's directions and instructions shall be followed in all cases when they have more restrictive requirements than that shown on the Contract Drawings or have stipulations in order to meet warranty requirements.

D. The Contractor shall schedule a minimum of two (2) mandatory coordination meetings during the initial and submittal phase of the project. The meetings shall be held at the jobsite and include, as a minimum, attendance by the Owner's Resident Engineer, Prime Contractor, Electrical Contractor, System Supplier Engineer, and Design Engineer.

1. The first meeting shall be held in advance of the first comprehensive submittal and no later than 21 days after Contract award. The purpose of the meeting shall be for the Electrical Contractor and System Supplier to summarize their understanding of the project, discuss any proposed substitutions or alternatives, review the project schedule, explain format of Drawings, and discuss any other topics deemed necessary for project coordination.

2. The second meeting shall be held after the review of the first comprehensive System Supplier submittal has been completed by the Owner. The purpose of the meeting is to discuss comments made on the submittal package, to update the project schedule, and coordinate the testing, training, and installation phases of the project.

E. The electrical and instrumentation modifications and additions are to be made after parts of the Plant are operational. The Contractor shall schedule all the required work with the Owner, including each shutdown period. Each shutdown shall be implemented to minimize disruption of the existing operations. The work to be provided under this Contract shall not disrupt any of the Plant operations without prior approval.

1. The Contractor shall limit all unscheduled shutdown periods to less than 1 hour and only with prior approval of the Owner.

2. Carry out scheduled shut downs only after the time, date, and sequence of work proposed to be accomplished during shutdown has been favorably reviewed by the Owner. Submit shutdown plans at least 2 days in advance of when the scheduled shutdown is to occur.

3. The Owner reserves the right to delay, change, or modify any shutdown at any time, at no additional cost to the Owner, when the risk of such a shutdown would jeopardize the operation of the system.

F. The Contractor shall cease work at any particular point, temporarily, and transfer his operations to such portions of work as directed, when in the judgment of the Owner it is necessary to do so.

G. Prior to commencing construction, the Electrical Contractor shall arrange a conference with the Prime Contractor, System Supplier and Owner's Resident Engineer as well as all major equipment suppliers, and shall verify types, sizes, locations, controls and installation requirements of all proposed equipment. He shall, in writing, inform the Owner's Resident Engineer that all phases of coordination of this equipment have been covered and if there are any unusual conditions, they shall be enumerated at this time.

H. The Supplier shall coordinate submittals and required meetings with the work, panel fabrication and factory tests so that project will not be delayed. This coordination shall include scheduling the different categories of submittals, so that one will not be delayed for lack of coordination with another.

1.8 SUPERVISION

A. The Contractor shall schedule all activities, manage all technical aspects of the project, coordinate submittal and Drawings, and attend all project meetings associated with this Section.

B. The Contractor shall supervise all work in this Section, including the Electrical Contractor's general construction work, and System Supplier's work, from the beginning to completion and final acceptance.

C. The Contractor shall supervise and coordinate all work in this Section to ensure that each phase of the project, submittal, delivery, installation, and acceptance testing, warranty, etc., is completed within the allowable scheduled time frame.

D. The Contractor shall be responsible for obtaining, preparing, completing, and furnishing all paper work for this Section including that of the Electrical Contractor and the System Supplier, which shall include transmittals, submittals, forms, documents, manuals, instructions, and procedures.

1.9 INSPECTIONS

A. All work or materials covered by the Contract documents shall be subject to inspection at any and all times by the Engineer. If any material does not conform to the Contract documents, or does not have an "approved" or "approved as noted" submittal status; then the Contractor shall, within three days after being notified by the Engineer, remove the unacceptable material from the premises; and if said material has been installed, the entire expense of removing and replacing same, including any cutting and patching that may be necessary, shall be done by the Contractor.

B. The Contractor shall give the Owner 10 working days' notice of the dates and time for inspection. Date of inspection shall be as agreed upon by both the Contractor and Owner.

C. Work shall not be closed in or covered over before inspection and approval by the Owner's Resident Engineer. All costs associated with uncovering and making repairs where non-inspected work has been performed shall be borne by the Contractor.

D. The Contractor shall cooperate with the Owner and provide assistance for the inspection of the electrical system under this Contract. The Contractor shall remove covers, provide access, operate equipment, and perform other reasonable work which, in the opinion of the Engineer, will be necessary to determine the quality and adequacy of the work.

E. Before request for final inspection is made, the Contractor shall submit to the Owner in writing, a statement that the Contractor has made his own thorough inspection of the entire project enumerating punch list items not complete and that the installation and testing is complete and in conformance with the requirements of this Division.

F. The Owner may arrange for a facility inspection by Cal-OSHA Consultation Service at any time. The Contractor shall make the necessary corrections to bring all work in conformance with Cal-OSHA requirements, all at no additional cost to the Owner.

G. Contractor will be responsible for any additional cost for overtime, weekend overtime or differential time expenses for inspection of defective work that has to be re-inspected.

1.10 JOB CONDITIONS

A. The Contractor shall make all arrangements and pay the costs thereof for temporary services required during construction of the project, such as temporary electrical power and

telephone service. Upon completion of the project, remove all temporary services, equipment, material, and wiring from the site as the property of the Contractor.

B. The Contractor shall provide adequate protection for all equipment and materials during shipment, storage, and construction. Equipment and materials shall be completely covered with two layers of plastic and set on cribbing six inches above grade so that they are protected from weather, wind, dust, water, or construction operations. Equipment shall not be stored outdoors without the approval of the Owner. Where equipment is stored or installed in moist areas, such as unheated buildings, provide an acceptable means to prevent moisture damage, such as a uniformly distributed heat source to prevent condensation.

C. The elevation of the project site is approximately 150 feet above sea level. All equipment shall be derated as recommended by the manufacturer or in accordance with ANSI C37.30.

D. The normal, unconditioned ambient temperature range of the job site will vary between 10° to 110 °F. All equipment shall be rated to operate at continuous full load under these temperature ranges. Any additional provisions for cooling or heating shall be provided to meet these requirements at no additional cost.

E. Corrosion Protection:

1. The Contractor is specifically cautioned that the treatment plant ambient air contains airborne contaminants, including but not limited to, the corrosive gasses: hydrogen sulfide, chlorine and ammonia. The corrosion severity level will vary according to specific locations, temperature, relative humidity, ratio of change of relative humidity, wind speed and wind direction, and may also be subject to seasonal variation.

2. Unless otherwise specified, equipment shall be installed such that no significant or detrimental corrosion shall occur over a 20 year period. Installation of 316 stainless steel NEMA 4X enclosures is acceptable to meet this requirement.

3. Class 1 Areas:

   a. Areas noted as Class 1, Div 1 or 2 areas may contain gases or vapors that are hazardous. The Contractor shall take all precautions to maintain personnel safety by always having working gas monitors present in Class 1 areas or by other methods.

   b. All Electrical construction in Class 1, Div 1 or 2 areas shall be installed as follows:

      1) Explosion proof.

      2) Intrinsically safe.

1.11 OPERATION AND MAINTENANCE MANUALS

Operation and maintenance manuals covering instructions and maintenance for each type of equipment shall be furnished per Section 01680 – Operating and Maintenance Manuals.

1.12 AREA CLASSIFICATION

Where equipment ratings are not specifically called out on the drawings or schedules, they shall be supplied with the following ratings:

A. Wet environments requiring NEMA 4X enclosures and construction:

1. Indoors in water corrosive or chemical exposed areas.
2. All equipment mounted outdoors.

B. Seismic Classification:

1. The site is within Seismic Zone 3. All electrical equipment and construction techniques must be designed and braced per Section 01610 Seismic Design Criteria.

C. Locations requiring Class 1, Division 1 rating:

1. Septage receiving station.
2. Headworks screening area.
3. All wetwells of submersible sewage or wastewater pumps.

D. Locations requiring Class 1, Division 2 rating:

1. Grit pumps, basins and classifier.
2. Aerobic Digesters.
3. Influent pump station.

1.13 CHANGE ORDER PRICING

A. All change order pricing by Contractor or System Supplier shall be broken out into the following minimum categories:

1. Labor per hour, listed per discipline, i.e. Engineer, Drafter, Estimator, Programmer, Secretarial, Electrician, etc.
2. Materials and equipment itemized per component and quantity.
3. Conduit and wiring size, lengths and costs per foot for material only.
4. Rentals, travel, per diem, etc.

5. Tax.

6. Shipping.

7. Insurance.

8. Overhead and profit.

B. Lump sum change order pricing is not acceptable.

C. If Contractor or System Supplier refuses to provide a change order with broken out pricing, the Engineer reserves the right to obtain independent estimates from other Contractors or System Suppliers. The Contractor or System Supplier, who refused to provide the change order with broken out pricing, will be charged for the preparation of the independent estimates.

PART 2 MATERIALS

2.1 QUALITY

A. It is the intent of the Contract Specifications and Drawings to secure the highest quality of all materials and equipment in order to facilitate operation and maintenance of the facility. All equipment and materials shall be new and the products of reputable suppliers having adequate experience in the manufacture of these particular items. For uniformity, only one manufacturer will be accepted for each type of product. Provide the manufacturer's latest design that conforms to these Specifications.

B. All equipment shall be designed for the service intended and shall be of rugged construction, of ample strength for all stresses which may occur during fabrication, transportation, erection, and continuous or intermittent operation. All equipment shall be adequately stayed, braced, and anchored, and shall be installed in a neat and workmanlike manner. Appearance and safety, as well as utility, shall be given consideration in the design of details. All components and devices installed shall be standard items of industrial grade, unless otherwise noted, and shall be of sturdy and durable construction suitable for long, trouble-free service. Light duty, fragile, and competitive grade devices which in the opinion of the Engineer are of doubtful durability shall not be used.

C. Products that are specified by manufacturer, trade name, or catalog number, establish a standard of quality and do not prohibit the use of approved equal of other manufacturers. However, all provided products specified or not, must be favorably reviewed and approved by the Engineer prior to installation.

D. Underwriter's Laboratories (UL) listing is required for any installed equipment; this includes substituted equipment when such a listing is available for any named equipment.

E. When required by the Contract Specifications or requested by the Engineer, the Contractor shall submit equipment or material samples for test or evaluation. The samples shall be furnished with information as to their source and prepared in such quantities and sizes as may be required for proper examination and testing, with all freight and charges prepaid. All samples shall be submitted before shipment of the equipment or material to the job site and in ample time to permit the making of proper tests, analyses, examinations, rejections, and resubmissions before incorporated into the work.

F. It is the System Supplier's responsibility to visit the jobsite to collect and document existing equipment and device part numbers in order for all similar new equipment to match existing.

2.2 COMPONENTS

A. Circuit Breakers:

1. Circuit breakers shall be of the indicating type, providing ON, OFF and TRIPPED positions of the operating handle. Circuit breakers shall be quick-make, quick-break, with a thermal-magnetic (TM) action, except when protecting motor feeders where motor circuit protector (MCP) breakers with adjustable magnetic trip shall be used. Circuit breakers shall be the bolted on type. The use of tandem or dual circuit breakers in a normal single-pole space to provide the number of poles or spaces specified are not acceptable. All multiple-pole circuit breakers shall be designed so that an overload on one pole automatically causes all poles to open. Circuit breakers and motor circuit protectors shall be manufactured by Eaton, ABB, ITE, Schneider or approved equal.

2. Breakers shall be sized and have a minimum interrupting capacity as shown on Drawings and as required for the supplied equipment.

3. Breakers requiring GF trip on E-Series Drawings shall be provided with breakers with integral ground fault trip.

4. Thermal magnetic circuit breakers with frames 250A and above shall be provided with removable interchangeable trip units.

5. Breaker for HVAC equipment shall have HACR rating.

6. All breakers shall be supplied with the correct sized copper only lugs for wire sizes as listed in "Conduit and Wire Routing Schedule". Provide larger frame breaker or lug adapters as necessary when connecting to the listed oversized wire.

7. All fuses on circuits of 480V or less shall have blown fuse indicators.

8. Provide larger MCPs as required for the horsepower of the supplied equipment at no additional cost to the Owner.

2.3 ELECTRICAL ENCLOSURES AND BOXES

A. Enclosures to be NEMA rated with fast access door latches. Enclosure construction shall be 14 gauge (minimum) with continuously welded seams. Outer door shall have provisions for locking enclosure with standard padlock. Provide full height white backpan in each box. Provide larger enclosure as required to accommodate the supplied equipment at no additional cost to the Owner.

B. Provide accessories consisting of breaker to disconnect incoming power, heater, fan, louvers, and thermostats. Provide metal data pocket within each enclosure and box to hold as-built drawings.

C. Panels listed as stainless steel shall be 316 stainless steel.

D. Provide copper ground bus per Section 16450.

E. All metal panel doors shall be installed with ground straps.

F. Panels shall be provided with engraved nameplate identifying name of panel, voltage and location of power source feeding it (i.e. MCC-100, Panelboard LP-1, etc.).

G. Enclosure shall be Hoffman, Rittal or approved equal.

2.4 MOTOR CONTROL PANELS

A. Provide motor control panels with padlockable main disconnect, motor circuit protector (MCP), auxiliary contacts for remote SCADA monitoring, control power transformer, elapsed time meter (ETM), HOA selector switch, reset pushbutton, starter with motor overloads, terminal blocks, relays, full height backpan, relays, and interlocks as shown on Contract P&ID Drawings. Provide larger panel as required to accommodate the supplied equipment at no additional cost to the Owner.

B. Motor controls shall be mounted on a backpan and installed in a NEMA rated enclosure.

C. Pilot devices, ETMs, indicators, etc. shall be mounted on a deadfront door located behind the outer enclosure door for motor control panels located outdoors.

D. Provide copper ground bus per Section 16450. All metal panel doors shall be installed with ground straps.

E. Enclosure shall have a padlockable disconnect switch for locking out pump operation and controls.

F. Provide metal data pocket within each enclosure and box to hold as-built drawings.

G. Motor control panel shall be Square D Class 8940, Eaton, or approved equal.

PART 3 EXECUTION

3.1 WORKMANSHIP

A. All work in this Section shall conform to the codes and standards outlined in Division 16 or in these plans and specifications.

B. The Contractor shall employ personnel that are skilled and experienced in the installation and connection of all elements, equipment, devices, instruments, accessories, and assemblies. All installation labor shall be performed by qualified personnel who have had experience on similar projects. Provide first class workmanship for all installations.

C. The Contractor shall ensure that all equipment and materials fit properly in his installations.

D. The Contractor shall perform any required work to correct that in the opinion of the Engineer are improper installations at no additional expense to the Owner.

E. The Engineer reserves the right to halt any work that is found to be substandard or being installed by unqualified personnel.

F. All cutting and notching shall be laid out carefully in advance. Do not notch any structural member or building surface without specific approval in writing from the Engineer. Carefully carry out any cutting, channeling, chasing, or drilling of floors, walls, partitions, ceilings, paving, or other surfaces required for the installation, support, or anchorage of conduit, raceways, or other electrical materials and equipment. Following such work, restore surfaces neatly to new condition using skilled craftsmen of the trades involved, at no additional cost to the Owner.

G. Keep the premises free from accumulation of waste material or rubbish on a daily basis. Upon daily completion of work, remove waste materials, scraps, and debris from the premises and from the interior and exterior of all devices and equipment.

H. All equipment installed by the Contractor shall be in accordance with the Drawings and the manufacturer's recommendations and instructions and shall operate to the Engineer's satisfaction. Follow all manufacturers' instructions for handling, receiving, installation, and pre-check requirements prior to energization. After energization, follow manufacturer's instructions for programming, set-up and calibration of equipment. The Contractor shall be responsible for and shall correct by repair or replacement, at his own expense, equipment which in the opinion of the Engineer, has been caused by faulty mechanical or electrical assembly by the Contractor. Necessary tests to demonstrate that the electrical and mechanical operation of the equipment is satisfactory and meets the requirements of these Specifications shall be made by the Contractor at no additional cost to the Owner.

I. The Contractor shall vacuum clean the interior of all motor control centers, panelboards, junction boxes and other enclosures supplied under this project containing electrical equipment to remove all dirt, metal chips, stripped insulation, etc., from the enclosure. This cleaning shall be done prior to energizing the device initially and a second time immediately prior to the final acceptance inspection.

3.2 CONSTRUCTION METHODS, GENERAL

A. All wiring shall be neatly bundled and laced with plastic tie-wraps, anchored in place by screw attached retainer. Where space is available, such as in electrical cabinets, all wiring shall be run in slotted plastic wireways or channels with dust covers. Wireways or channels shall be sized such that the wire fill does not exceed 50%. Wires carrying 100 volts and above shall be physically separated from lower voltage wiring by using separate bundles or wireways with sufficient distance to minimize the introduction of noise, crossing only at 90 degree angles. Retainers shall be Panduit High Bond Adhesive back mounts SGABM series, or approved equal.

B. Where wiring crosses hinged surfaces, provide a "U" shaped hinge loop protected by plastic spiral wrap. The hinge loop shall be of sufficient length to permit opening and closing the door without stressing any of the terminations or connections.

C. Wireways, retainers, and other devices shall be screw-mounted with round-head 316 stainless steel screws. Glue or sticky back attachment of any type or style shall not be used.

D. All devices and wiring shall be installed and permanently labeled and secured in accordance with Section 16120.

E. All components associated with a particular compartment's or enclosure's function shall be mounted in that compartment or enclosure.

F. Spacing and clearance of components shall be in accordance with UL, JIC, and NEC standards.

G. Wires shall not be spliced except where shown. Devices with pigtails, except lighting fixtures, shall be connected at terminal blocks. Equipment delivered with spliced wires shall be rejected and the Contractor required to replace all such wiring, at no additional cost to the Owner.

H. Where splices are allowed or approved by the Engineer they shall conform with the following:

1. Splices of #10 and smaller, including fixture taps, shall be made with nylon self-insulated twist on wire joints; T & B, or approved equal.

2. Splices of #8 and larger shall be double crimped splices, or approved equal, insulated with heat shrink tubing, or approved equal.

3. Splices in underground pullboxes shall be insulated and moisture sealed with 3M "Scotchcast" cast resin splice kits. Kits used shall have a date marking for shelf life that is not expired.

4. Wire splicing devices shall be sized according to manufacturer's recommendations.

5. Tape on splices shall not be allowed.

6. Splices for motor leads shall be made with 3M DB series splice kit, or approved equal.

I. Tapes shall conform to the requirements of UL 510 and be rated: 105 °C, 600V, flame retardant, hot and cold weather resistant. Vinyl plastic electrical tape shall be 7 mil black. Phase tape shall be 7 mil vinyl plastic, color coded as specified; 3M 33 + or equal. Electrical insulation putty shall be rubber based, elastic putty in tape form; 3M or equal. Varnished cambric shall not be used.

J. Connections to terminals shall be as follows:

1. Use connector or socket type terminals furnished with component.

2. Connections to binding post screw, stud, or bolt use:

a. For #10 and smaller wire, T & B "Sta-Kon," Buchanan "Termend" or approved equal, self-insulated locking forked tongue lug.

b. For #8 to #4/0 wire, T & B "Locktite," Burndy QA, or approved equal, lug of shape best suited.

3. Use ratchet type crimping tool which does not release until proper crimp pressure has been applied.

4. Connections for all terminals shall be made with insulation stripped per manufacturer's instructions.

K. Equipment shall be wired and piped by the manufacturer or supplier. Major field modifications or changes are not allowed without the written "change order" authority by the Engineer. When field changes are made, the components, materials, wiring, labeling, and construction methods shall be identical to that of the original supplied equipment. Contractor's cost to replace or rework the equipment to match original manufacturer or supplier methods shall be done at no additional cost to the Owner.

L. Mating fittings, bulkhead fittings, plugs, connectors, etc., required to field interface to the equipment and panels shall be provided by the supplier when the equipment is delivered.

M. All electrical and instrumentation Drawings associated with the equipment shall be provided with the equipment when it is delivered to the job site. Drawings for each piece of equipment shall be placed in clear plastic packets of sufficient strength that will not tear or stretch from drawing removal and insertion. All Drawings shall also be provided in a digital electronic format.

N. Vertical motors, horizontal motors and all motors shall have make-up connections per Contract Drawings.

O. All wire and cable lugs shall be copper; aluminum or aluminum alloy lugs shall not be allowed. The Electrical Contractor shall supply all lugs to match the quantity and size of wire listed in the Conduit and Wire Routing Schedule.

3.3 EQUIPMENT FABRICATION, GENERAL

A. Panel cutouts for devices (i.e., indicating lights, switches) shall be cut, punched, or drilled and smoothly finished with rounded edges. Exposed metal from cutouts that are made after the final paint finish has been applied shall be touched up with a matching paint prior to installing device. Do not paint nameplates, labels, tags, switches, receptacles, conductors, etc.

B. All doors shall be fully gasketed with non-shrinkable, water and flame resistant material.

C. Bolts and screws for mounting devices on doors shall be as specified by the manufacturer; otherwise they shall have a flush head which blends into the device or door surface. No bolt or screw holding nuts shall be used on the external surface of the door.

D. No fastening devices shall project through the outer surfaces of equipment except as designated by the manufacturer and approved by the Engineer.

E. Each component within the equipment shall be securely mounted on an interior subpanel or backpan and arranged for easy servicing, such that all adjustments and component removal can be accomplished without removing or disturbing other components. Mounting bolts and screws shall be front located for easy access and removal without special tools. Access behind the sub panel or backpan shall not be required for removing any component.

F. A copper ground bus shall be provided in each enclosure or cabinet. It shall have provisions for connecting a minimum of ten grounding conductors. Screw type lugs shall be provided for connection of grounding conductors. All grounding conductors shall be sized as shown on plans or in accordance with NEC Table 250.120, whichever is larger.

G. Minimum wire bending space at terminals and minimum width of wiring gutters shall comply with NEC Tables 312.6 (a) and (b).

H. Wire shall not be installed with smaller sizes than those shown in NEC Article 310 for each circuit amperage rating.

I. Future device and component mounting space shall be provided on the door, backpan, and subpanel where detailed on the Drawings. Where no detail is shown, provide a minimum of 15 percent usable future space.

J. Doors shall swing freely to a minimum of 90° and close with proper alignment.

K. All control, power, and signal wires inside enclosures shall be run in separate plastic wireways. Wireways shall not be filled over 50% capacity.

L. All electrical panels shall be labeled with the KAIC rating and meet the minimum Contract Document design rating; SSCR labeling is not accepted as an equivalent.

M. All vents shall be provided with removable metal filter.

N. A ground bus shall be provided in each enclosure or cabinet. It shall have provisions for connecting a minimum of ten grounding conductors. Screw type lugs shall be provided for connection of grounding conductors. All grounding conductors shall be sized as shown on plans or in accordance with NEC Table 250.122, whichever is larger.

3.4 DELIVERY

A. Contractor shall inspect each electrical and instrumentation item delivered to the jobsite and ensure that it is undamaged, meets specification and submittal.

B. Contractor shall unpack each item for inspection within two (2) days of arrival.

C. Complete written inventory shall be produced by Contractor and submitted to Owner within (2) days after arrival on jobsite for record keeping prior to any payment for the item.

3.5 DAMAGED PRODUCTS

Damage products will not be accepted. All damaged products shall be replaced with new products.

3.6 FASTENERS

A. Fasteners for securing equipment to walls, floors, and the like shall be 316 stainless steel. The minimum size fastener shall be 1/2-inch diameter. Layout to maintain headroom, neat mechanical appearance, and to support equipment loads required.

B. Concrete pad with stainless steel anchor bolts shall be provided for each Field Control Station and instrument support.

C. Anchor Methods:

1. Hollow Masonry: Sleeve type anchors.
2. Solid Masonry: Sleeve type anchors or epoxy anchors bolts.

3. Metal Surfaces: Machine screws, bolts, or welded studs.

4. Concrete Surfaces: Wedge or expansion anchors.

5. Structural Steel: Right angle, parallel and edge type rigid metal clamps. Do not weld or drill structural steel.

D. Equipment Mounting:

1. The Contractor shall be responsible for furnishing and setting all anchor bolts required to install his equipment.

2. Electrical equipment shall be unistrut "stand off" mounted a minimum of ½ - inch from the wall in a manner so that the rear of the equipment is freely exposed to air circulation.

3. Unistrut material shall be 316 stainless steel in NEMA 4X areas and galvanized in non-NEMA 4X areas unless called out specifically in details. Provide and install all unistrut face and bracing for secure mounting with a maximum ¼" deflection.

4. All equipment enclosures shall be of the NEMA classification noted on the electrical plan Drawings for the area in which the device will be mounted.

5. Reinforced concrete pad with 316 stainless steel anchor bolts shall be provided for each electrical freestanding equipment.

E. Dissimilar metals such as aluminum, stainless steel, steel, galvanized steel between enclosures, devices, etc. and mounting surfaces shall be isolated from each other using insulated tape or nonmetal spacers. Tape and spacers used shall be specifically manufactured for this application.

3.7 INSTALLATION, GENERAL

A. System:

1. Install all products per manufacturer's recommendations and the Drawings.

2. Provide relays, signal converters, isolators, boosters, and other miscellaneous devices as required.

3. Change normally open contacts to normally closed contacts or vice versa.

4. Add additional relays to provide more contacts as necessary.

5. Keep a copy of the manufacturer's installation instructions on the jobsite available for review at all times prior to and during the installation of the associated equipment.

B. Panels and Enclosures:

1. Install panels and enclosures at the location shown on the Drawings or approved by the Engineer.

2. Install level and plumb.

3. Seal all enclosure openings to prevent entrance of insects and rodents.

4. All conduits entering outdoor panels and enclosures shall use watertight hubs. These hubs shall be located on sides or bottom only. Top entry of outdoor panels or enclosures is not allowed unless specifically shown on plans.

5. Provide larger motor termination boxes as required to accommodate conduit and wires.

6. Additional condulets with terminal blocks shall be supplied for wire termination to devices with leads instead of terminals (i.e. solenoid valves, level probe, etc.).

7. Terminate all status, control, and analog I/O wiring on terminal blocks, including spares. Provide additional relay, DIN rails, terminal blocks and side panels as required.

8. Seal around bottom edge of all pad mounted enclosures to prevent entrance of insects, rodents, dirt, debris, etc.

9. Clearance about electrical equipment shall meet the minimum requirements of NEC 110.26.

10. Provide supporting devices per Section 16190.

11. All panels and enclosures shall be delivered with as-built drawings in clear plastic packets within each panel and enclosure.

C. Conduits and Ducts:

1. Install all conduits and ducts per Section 16110, Section 16115 and Section 16190.

2. Special “Soft–Jaw” type pipe clamps shall be used to prevent damage to PVC-coated conduit while field threading and cutting to length.

D. Wiring, Grounding, and Shielding:

1. Wiring inside and outside equipment shall be installed per Section 16120.

2. It is important to observe good grounding and shielding practices in the generally noisy environment in this application. The shield of shielded cables shall be terminated to ground at one end only, the originating panel end. The shield at the other end shall be encased in an insulated material to isolate it from ground.

3. Special cables shall be provided when required by manufacturer or necessary to correct noise or distortion interference at no additional cost to Owner.

4. Field wiring shall not begin until interconnection drawings have been submitted by the Contractor and approved by the Engineer, per Section 16011.

E. Cutting and Patching:

1. The Contractor shall do all cutting and patching required to install their work. Any cutting which may impair the structure shall require prior approval by the Engineer. Cutting and patching shall be done only by skilled labor of the respective trades. All surfaces shall be restored to their original condition after cutting and patching.

F. Seals:

1. Seal around all conduits, wires, and cables penetrating between walls, ceilings, and floors in all buildings with a fire stop material. Seal shall be made at both ends of the conduit with a fire stop putty. Seal shall have a minimum two hour rating. Fire stop sealing shall be International Protective Coatings Flamesafe, or approved equal.

2. Seal around conduits entering outside to inside structures and around bottom of free standing enclosures to maintain watertight integrity of structure.

3. Place conduit type seal in each underground conduit riser into panels and enclosures to prevent entrance of insects and rodents.

4. Seal around bottom edge of all pad mounted enclosures to prevent entrance of insects, rodents, dirt, debris, etc.

G. Housekeeping Pads:

1. Concrete housekeeping pads are required for all free standing electrical equipment. Housekeeping pads shall be 3-1/2" inches above surrounding finished floor or grade unless otherwise shown and shall be 4 (minimum) inches larger in width and depth around equipment.

2. Housekeeping pads shall be installed for future units as shown on the Contract Drawings.

3. Housekeeping pad shall be high quality Class "A" concrete with rebar crossway network per Contract Drawings. The minimum size rebar allowed is #3. Concrete shall be precisely leveled so that equipment set in place will not require shimming.

H. Cleaning and Touch up:

1. Prior to start-up and the completion of the work, all parts of the installation, including all equipment, exposed conduit, and fittings shall be cleaned and given touch up by Contractor as follows:

   a. Remove all grease and metal cuttings.

   b. Any discoloration or other damage to parts of the building, the finish, or the furnishings, shall be repaired.

   c. Thoroughly clean any of his exposed work requiring same.

d. Vacuum and clean the inside of all MCC and electrical and instrumentation enclosures prior to applying power and at end of project before final acceptance. Removing debris with an air blower is not permitted.

e. Clean all above and below ground pull boxes, junction boxes, and vaults from all foreign debris prior to final acceptance.

f. Paint all scratched or blemished surfaces with the necessary coats of quick drying paint to match existing color, texture, and thickness. This shall include all prime painted electrical equipment, including but not limited to enclosures, panels, poles, boxes, devices, etc.

g. Remove all decals and lettering from both sides of support plates.

h. Repair damage to factory finishes with repair products recommended by Manufacturer.

i. Repair damage to PVC or paint finishes with matching touchup coating recommended by Manufacturer.

3.8 SAFETY LOCKOUTS

A. Contractor shall provide safety lockout tags on the breakers for all MCCs and Panelboards and other electrical enclosures. Safety tags shall not be the same as those used by the Owner. All padlocks used for this purpose shall be keyed differently from any of the Owner's padlocks. Padlocks shall remain in place by the Contractor until operation of the portion of work is turned over to the Owner with the responsibilities noted on the acceptance form.

B. The following is the procedure for transferring each portion of work over to the Owner prior to completion of the entire project:

1. Contractor shall inform the Owner when a portion of the work is complete, ready for inspection and available to be placed into operation.

2. The Owner will schedule the inspection and substantiate that the work is complete and operational.

3. The Contractor will correct any deficiencies.

4. The Owner will prepare a Partial Utilization form in which that portion of the project will be turned over the Owner with the responsibilities noted on the acceptance form. The Contractor then shall remove his safety lockouts and tags.

C. Safety lockout tags shall be rigid vinyl with write-on surface and brass grommet. Safety tags shall be secured in place with material of sufficient strength to prevent accidental removal or displacement. Safety lockout tags shall be Panduit Write-on Safety Tags, model PVT-98 or approved equal

3.9 TESTING

A. Field Tests shall be per NETA ATS requirements.

3.10 WARRANTY

A. The Contractor shall warrant all electrical and instrumentation equipment and software supplied under this scope of work for a period of one (1) year from date of final acceptance. Standard published warranties of equipment which exceed the preceding specified length of time shall be honored by the manufacturer or supplier.

B. The Contractor shall provide all labor and material to troubleshoot, replace, or repair any hardware or software that fails or operates improperly during the warranty period, at no additional cost to the Owner.

C. The System Supplier shall have a staff of experienced personnel available to provide service on a two (2) working day notice during the warranty period. Such personnel shall be capable of fully testing, programming and diagnosing the hardware and software delivered; and of implementing corrective measures.

D. If the System Supplier fails to respond in two (2) working days, the Owner at its option will proceed to have the warranty work completed by other resources; the total cost for these other resources shall be reimbursed in full by the Contractor. The use of other resources, as stated above, shall not change or relieve the Contractor or supplier from fulfilling the remainder of the warranty requirements.

E. Each time the Supplier's repair person responds to a system malfunction during the warranty period, he or she must contact the designated Owner maintenance supervisor for scheduling of the work, access to the jobsite, and permission to make repairs. Operation of facilities necessary to test equipment shall only be performed by or under the direction of the Owner Staff. The Owner reserves the right at its sole discretion to deny operations requested by the Supplier. A written description of all warranty work performed shall be documented on a field service report to be given to Owner prior to the repair person leaving job site each day. This field service report shall detail and clearly state problem, corrective actions taken, additional work that needs to be done, data, repair person name and company.

F. Prior to "final acceptance," the Contractor shall furnish to the Engineer a listing of warranty information for all manufacturers of materials, instruments, and equipment used on the project. The listing shall include the following:

1. Manufacturer's name, service contact person, phone number, and address.

2. Material and equipment description, equipment number, part number, serial number, and model number.

3. Manufacturer's warranty expiration date.

4. Copies of receipts/proof of purchase.

3.11 FINAL ACCEPTANCE

A. Final acceptance will be given by the Owner after the equipment has passed the "final acceptance trial period," each deficiency has been corrected, final documentation has been provided, and all the requirements of design documents have been fulfilled.

B. At the end of the project, following the completion of all of the field tests, and prior to final acceptance, the Supplier shall:

1. Remove all temporary services, equipment, material, and wiring from the site.

2. Verify Service equipment has been legibly marked in field with the maximum available fault current per NEC 110.24 (A). Field marking shall include date the fault current calculation was performed and be weather & UV rated. Service equipment shall not be hand labeled.

3. Two sets of all keys for locks supplied on this project. Submit each key with matching duplicate. Wire all keys for each lock securely together. Tag and plainly mark with lock number or equipment identification, and indicate physical location, such as panel or switch number.

4. Verify that as-installed drawings, in reinforced clear plastic pockets, have been placed in all new or modified panels.

5. Provide the following final documentation to the Owner:

a. A listing of warranty information.

b. Operations and Maintenance Manual – Each "operation and maintenance" manual shall be modified or supplemented by the Supplier to reflect all field changes and as-built conditions.

c. Full size record drawings, neatly marked and accurately showing the information required herein.

d. Four (4) USB drives with copies of all final documentation to reflect as-built conditions. USB to include drawings in both PDF & DWG Format.

END OF SECTION

SECTION 16110

CONDUITS

PART 1 GENERAL

1.1 SCOPE OF WORK

A. This Specification Section covers the furnishing, installing and testing of all conduits, cable tray, fittings, and supports as specified herein, as shown on the Drawings, and as required for a complete electrical installation.

B. The provisions of Section 16010 of these Specifications shall apply, unless otherwise specified in this Section.

C. The conduit system shall consist of the types and sizes as required and shall include all rigid steel conduit, flexible conduit, non-metallic conduit, wireway, and accessories as required for the embedded and exposed raceway systems.

1.2 SUBMITTALS

A. Provide data and Drawings for all materials furnished under this Section with the content and format as specified Section 01300.

B. Submittals for the Conduit materials and equipment shall include, but shall not be limited to, the following:

1. Catalog cuts showing manufacturer, catalog numbers, dimensions, weights and material for all raceway and accessories.
2. Dimensioned "as-built" Drawings of Contract Electrical plans.
3. Marked up "as-built" Conduit and Wire Routing Schedule.

1.3 QUALITY ASSURANCE

A. Materials shall be of a manufacturer that has been fabricating and assembling specified raceway systems in it’s current facility for a minimum of two (2) years.

B. All materials selected for the manufacture of the hardware shall be the best available for the purpose for which they are used, considering strength, ductility, durability, and the best engineering practice.

C. All like parts shall be interchangeable.

PART 2 MATERIALS

2.1 REFERENCE STANDARDS

A. Conduits supplied under this Contract shall be designed, manufactured, and tested in accordance with the latest version of the following standards.

B. American National Standards Institute (ANSI) Publications:

C33.92	Flexible Liquidtight Metal Conduit
C80.1	Rigid Steel Conduit
C80.4	Rigid Steel Conduit Fittings

C. National Electrical Manufacturer's Association (NEMA):

FB 1	Fittings and Supports for Conduit Cable Assemblies
TC-2 and TC-3	Non-metallic Conduit and Fittings
RN 1	Rigid Steel Conduit PVC jacketed

D. Underwriters Laboratories, Inc.:

UL-514A	Metallic Outlet Boxes, Electrical
UL-870	Wireways, Auxiliary Gutters and Associated Fittings
UL-6	Rigid Metal Electrical Conduit
UL 651	Schedule 40 and 80 Rigid PVC Conduit

2.2 CONDUIT AND CONDUIT FITTINGS

A. General:

1. Conduit, fittings, and raceway materials shall be manufactured in accordance with UL and ANSI standards and shall be UL labeled for the application.
2. The Contractor shall use special conduit, raceways, wireways, construction methods, and materials as shown on the Contract Drawings; which shall take precedence over any general methods and materials specified in this Section.

3. Continuation of conduit runs, not specifically called out in Conduit and Wire Routing Schedule, especially "flex" conduits, shall be provided with wires listed in Conduit and Wire Routing Schedule of previous runs.

B. Material for the conduit system shall conform to the following:

1. Galvanized Rigid Steel Conduit:

a. Rigid steel conduit, couplings, bends and nipples shall be in accordance with ANSI C80.1 and UL-6.

b. Hotdip galvanized inside and outside after fabrication and then coated with a zinc bichromate finish.

c. Minimum trade size - three-quarters inch (¾") unless otherwise shown on Contract Drawings.

d. Galvanized rigid steel factory elbows for NEMA 1 areas 90 degree transitions. NEMA 4X area transitions shall be GRS-PVC factory ells.

e. EMT or IMC is not considered an equivalent to GRS.

f. GRS conduit is allowed only when specifically called out in the "Conduit and Wire Routing Schedule."

2. Flexible Liquidtight Metal Conduit: (FLEX):

a. Flexible liquidtight metal conduit shall be in accordance with ANSI C33.92 and shall be galvanized steel core with a copper bonding conductor between the spiral segments and an extruded synthetic jacket overall to insure a liquid-tight conduit. Flexible metallic conduit shall be fabricated from galvanized interlocked steep strip. Liquid-tight flexible metallic conduit shall have an extruded polyvinylchloride covering of the flexible steel conduit and shall be in accordance with NEC 350.120. The conduit shall be Anamet Sealtight Flexible conduit, or approved equal.

b. FLEX conduits shall meet the minimum requirements of NEC Code Table Annex 3 C3 "Maximum Number of Conductors and Fixture Wires in Flexible Metallic Conduit" and Table C3A "Maximum Number of Compact Conductors and Fixture Wires in Flexible Metallic Conduit."

c. Minimum trade size - one-half inch (½") unless otherwise shown on Contract Drawings.

d. Flexible conduit lengths shall not be greater than 36 inches for conduits 1½" or smaller (½" minimum) and 48 inches for conduits 2" or larger.

e. Flexible metallic conduit shall not be considered as a ground conductor, Contractor shall install a separate wire for equipment bonding.

f. Non-metallic flexible conduit shall not be used except when connecting from PVC-40 or PVC-80 conduits to equipment.

g. Flexible conduit shall only be installed in exposed or accessible locations.

h. Install flexible conduit in a manner that will minimize stress on connectors per NEC 350.24.

i. Flex connectors shall be PVC coated when connected to GRS-PVC conduits, or when located in NEMA 4X area.

3. Rigid Galvanized Steel Conduit PVC Bonded (GRS-PVC): Conduit shall conform to the requirements of NEMA RN1, Type A40. GRS-PVC conduit shall be rigid galvanized steel conduit to which an epoxy acrylic primer and a 40 mil thick UV rated polyvinyl chloride coating has been bonded. The interior of all GRS-PVC conduits and fittings shall be coated with a two part chemically cured urethane coating at a 2 mil minimum thickness. Bond strength shall exceed the tensile strength of the plastic coat. Furnish Perma Cote Supreme, Robroy Industries, or approved equal.

   a. Minimum trade size – three-quarters inch (¾") unless otherwise shown on Contract Drawings.

   b. Provide PVC coated galvanized rigid steel factory elbows for 45 or 90 degree transitions.

   c. All fittings used with plastic coated conduit shall be similarly coated with not less than 40 mils of polyvinyl chloride and shall be provided with Type #316 stainless steel hardware.

   d. For factory coated conduit, use overlapping PVC sleeves. Sleeves shall extend beyond end of fitting minimum distance equal to nominal diameter of conduit, and shall fit tightly over conduit coating to form a watertight joint. Joints and fittings shall be made tight with strap wrenches.

   e. All damage to PVC jacket shall be repaired with four separate applications of PVC paint. Finished patch shall be 0.040-inch minimum thickness. PVC coating patching material shall be as provided by the Manufacturer.

   f. Support channel and pipe straps shall be PVC coated. Exposed metal bolts/nuts, all-thread rod shall be 316 stainless steel.

   g. GRS-PVC conduits shall be used for all underground conduits except service entrance conduits.

4. Rigid Polyvinyl Chloride (PVC) Conduit: PVC conduit shall be manufactured in accordance with UL 651. PVC conduit shall be Schedule 40 or Schedule 80 high impact polyvinyl chloride, UL listed for direct burial.

   a. Minimum trade size - one inch (1") unless otherwise shown on Contract Drawings.

   b. PVC fittings shall have solvent-weld-type conduit connections.

   c. PVC conduit is not suitable for above grade installation except where specifically called out in Conduit and Wire Routing Schedule.

5. Electrical Metallic Tubing (EMT):

    a. EMT shall be galvanized thinwall conduit conforming to UL 797.

    b. Minimum trade size - three-quarters inch (¾") unless otherwise shown on Contract Drawings.

    c. Couplings and connectors for EMT shall be galvanized or cadmium plated and shall be of the compression type requiring the tightening of a nut on a gland ring.

    d. Rolled steel, zinc coated outside with zinc-coating or other approved corrosion-resistant coating on the inside.

    e. EMT conduits may be used as follows when listed on plans or in the Conduit and Wire Routing Schedule:

        1) Conduit runs on walls and ceilings inside buildings more than 8 feet above the floor. EMT can be used below 8 feet, but not lower than 1 foot above the floor when EMT originates from above and conduit does not penetrate the floor. EMT Conduit may not be used in normal exposed locations lower than 8 feet above the floor when conduits penetrate the floor.

        2) Concealed in drywall partitions.

    f. EMT conduits shall not be used:

        1) When other types of conduit material are specifically called out in the Conduit and Wire Routing Schedule.

        2) Any location subject to physical damage.

        3) Normal exposed locations lower than 8 feet above the floor when conduits penetrate the floor.

        4) In boiler rooms.

        5) Wetwell, outdoor or corrosive locations.

6. Fittings:

    a. GRS Fittings:

        1) Fittings for GRS conduits shall be threaded type. Set-screw type and compression-type are not acceptable. Fittings shall conform to the requirements of ANSI C80.4.

    b. Flex Fittings:

        1) NEMA 1 or 12 locations shall have cadmium-plated malleable iron body and gland nut with cast-in lug, brass grounding ferrule threaded to engage conduit spiral and O-ring seals around the conduit and box connection and insulated throat.

2) NEMA 4X rated areas shall have PVC coated flex fittings and connectors.

3) Fittings, for Class 1 locations only, shall have insulted throats, liquidtight, oil tight, suitable for outdoors and Class I, Div 2 locations.

c. GRS-PVC Fittings:

1) GRS-PVC fittings shall be hot dipped galvanized steel or galvanized cast ferrous metal with a PVC 40 mils thick coating. Provide threaded-type fittings, couplings, and connectors; set-screw type and compression-type are not acceptable. Fittings shall be Robroy Liquitite, Perma-Cote, or approved equal coated fittings.

d. EMT Fittings:

1) Couplings shall be rain tight compression type Appleton 93T Series, Efcor 760 Series, or approved equal.

2) Connectors shall be rain tight compression type with insulated throat Appleton 84T Series, Efcor 750B Series, or approved equal.

C. Conduit Type by Installation: Provide conduits as listed in "Conduit and Wire Routing Schedule" or as shown on Contract Drawings. Conduits not covered by in "Conduit and Wire Routing Schedule" or Contract Drawings shall be GRS-PVC except where EMT is allowed.

2.3 WIREWAY

A. Provide screw cover and hinged wireway only.

B. Wireways shall be constructed in accordance with Underwriter's Laboratories Standards UL 870 for Wireways, Auxiliary Gutters and Associated Fittings. Every component including lengths, connectors, and fittings shall be UL listed.

C. Wireways shall be suitable for "lay-in" of conductors. All screws installed toward the inside shall be protected by spring nuts or otherwise guarded to prevent wire insulation damage.

D. Wireways shall be EMP-1 Sectional flanged oil-tight type with hinged covers and shall be 8 inches by 8 inches in cross Section unless otherwise specified. New wireways that extend existing wireways shall be of the same manufacturer and type.

E. Non-Corrosive Areas: Wireways shall be coated with a rust-inhibiting, phosphatizing coating and gray baked enamel finish. All hardware shall be plated to prevent corrosion.

F. Corrosive or NEMA 4X Areas: Wireways shall be NEMA 4X 316 stainless steel. Non-Metallic wireways may be used when approved by Engineer in writing.

2.4 CONDUIT SEAL

Conduit seal shall provide high adhesion and moisture protection. Seal shall absorb cable-filling material and be re-enterable. Conduit seal shall be 3M #442 High Gel re-enterable encapsulant, or approved equal.

2.5 WARNING TAPE

Bury plastic tape shall be colored for particular underground service, 3-inch minimum width, utilize tape made of material resistant to corrosive soil. Tape shall have aluminum backing to facilitate locating it underground using a non-ferrous locator. Use red tape for “Electric” service and orange tape for “Communication” service. Tape shall have printed wording listing type of service. Tape shall have aluminum backing to locate using non-ferrous locator. Bury detectable warning tape shall be Seton, Blackburn, Griffolyn Co., Terra-Tape, Brady, or equivalent.

2.6 PULL ROPE

A. Provide 1/2 inch wide, polyester pull tape rated 1250 pounds tensile strength in each empty conduit more than 10 feet in length. Pull tape is synonymous with pull rope. Pull tape shall be printed with sequential footage. Pull tape to be installed underground spare and future conduits.

B. Pull tape shall be Neptco Muletape WP1250P or approved equal.

2.7 CONDUIT MARKING

A. All exposed conduit inside buildings entering/leaving panels and enclosures shall conduit tags composed of tag tiles with tag holder where allowed by space. Tag holder shall be secured to conduit using nylon cable ties on both ends. Tag tiles shall be Almetek Type EZ-V, or approved equal. Tag holder shall be Almetek Type TH, or approved equal.

B. When there is no space available to use tag ties, such as in Motor Control Centers with underground feed or for conduits outside of buildings, then the tag material shall be rigid laminated red phenolic with white lettering. The size of the tag shall be 2" diameter. No letters are allowed smaller than 7/16". Tags shall be heat and UV resistant, stain-proof, electrically non-conductive and non-corroding. Securely fasten tags in place using UV rated plastic ty-wraps. Engrave the tags, on both sides, with the conduit number. Labeling shall be neatly installed for visibility and shall be clearly legible. Conduit tags shall be Brady Custom B-1, or approved equal.

PART 3 EXECUTION

3.1 CONDUIT AND RACEWAY INSTALLATION

A. Conduit and Raceway Requirements:

1. Install an accessible raceway and conduit system for connection of all boxes, panelboards, cabinets, equipment, etc.

2. All conduit and raceway shall be the size and type as shown on Conduit and Wire Routing Schedule except as follows:

   a. All exposed conduits in NEMA 4X areas (except for indoor corrosive areas) and outdoor locations shall be GRS-PVC.

   b. All exposed conduits in NEMA 12 areas shall be GRS.

   c. All exposed conduits in indoor NEMA 4X corrosive areas shall be PVC-80.

3. All conduit and raceway shall be the type as shown on Conduit and Wire Routing Schedule. In no case shall the conduit size be smaller than that shown.

4. Conduits connected to boxes, cabinets, etc., outdoors, exposed to weather or in areas subject to excessive moisture shall be fitted with watertight sealing hubs of steel or malleable iron with sealing ring and insulated throat, Myers hub, Thomas and Betts 370 Series, or approved equal.

5. Malleable iron threaded grounding bushing, with insulated throat and set screw solderless lugs, Appleton GIB-XXXSL series shall be placed on the end of all rigid conduits. A ground bare copper wire shall bind each bushing to the enclosure ground bus.

6. Spare conduits shall be installed as that type of conduit.

7. Matching Existing Facilities:

   a. When new conduit are added to areas which are already painted, the conduit and its supports shall be painted to match the existing facilities.

   b. Where new conduit is used to replace existing conduit, the existing conduit and supports shall be removed, resulting blemishes shall be patched and repainted to match original conditions.

   c. If existing conduits are to be reused and rerouted, resulting blemishes shall be corrected in the same manner.

   d. Mandrel or conduit piston shall be pulled through the entire existing conduit run to prove the length contains no blockages or obstructions. Mandrelling shall be witness by the Owner

e. Install new conduit tags for reused conduits at all transition boxes and endpoints. Conduit & Wire Routing Schedule shall be updated as these modifications take place.

8. Contractor is to remove and waste all unused wire associated with existing conduits reused for new work.

9. When existing conduits have new wire pulled to existing equipment, the Contractor is responsible for reconnecting all terminations to the equipment.

10. Contractor to remove and waste all conduit and wire associated with removal or demolition of equipment.

11. Equipment to be replaced with new shall have new flex conduits installed and wire reconnected by Contractor.

12. Painted to match adjoining surface.

13. After complete installation of 2 inch and larger conduit runs, snake conduits with conduit cleaner equipped with a cylindrical mandrel of a diameter not less than 85 percent of nominal diameter of conduit. Remove and replace conduits through which mandrel will not pass.

14. Clean and ensure that new and existing conduit runs are not crushed or creased. Verify internal dimensions of existing conduit prior to installation of conductors. Verify that no foreign objects or obstructions are present in conduit prior to installing conductors.

15. Install conduit system to provide firm mechanical assemblies with electrical conductivity throughout.

B. Exposed Conduit:

1. All exposed conduits shall be run in straight lines parallel to column lines, walls or beams. Where conduits are grouped, the bends and fittings shall be installed so as to present an orderly appearance. Unnecessary bending or offsets shall be avoided. Conduits shall be kept at least 12 inches away from heating devices or similar equipment.

2. Supports for exposed conduit shall be in accordance with Title 24, CAC.

3. Securing and supporting of liquidtight metal conduit shall be in accordance with NEC 350.30.

4. Support rigid conduits at 8 feet intervals and PVC conduits at 4 feet intervals. Support all conduits within 1 foot of boxes or changes in direction. Use riser supports with clamps for vertical conduit risers.

5. For single conduit runs, use pipe straps or suspend from ceiling with single conduit hangers. Single hole malleable iron clamps with backplates may be used for horizontal runs on vertical surfaces. Perforated strap (plumber's tape), not acceptable.

6. For multiple conduit runs, group conduits together and support from ceiling by means of trapeze hangers. Wall brackets or unistrut supports shall be used for conduit runs on vertical surfaces. Clamp each conduit to trapeze or support, using conduit clamp.

7. Fasten hanger rods to structural steel members with beam clamps or to concrete inserts set flush with surface. Install reinforcing rod through opening in concrete insert.

8. Exposed conduit shall be supported rigidly in place. All exposed conduit shall include, where required, the drilling of holes in the bottom or sides of enclosures. The Contractor shall thoroughly examine work prior to drilling to avoid drilling into components within enclosures.

C. Conduits in Concrete Slabs:

1. Conduits may be installed in structural slabs, or in slabs on grade, having the following minimum thickness: 4" thick for conduits greater than ¾".

2. Maintain a minimum of two-inches of clearance between conduits and any reinforcement bars. In structural slabs, place conduits carefully between upper and lower layers of steel. In pre-stressed concrete slab construction, place conduits in center of slab and do not support from pre-stressed steel.

3. Space conduits to maintain structural integrity of slabs.

4. Place conduits running parallel to slab supports (beams, columns, walls, etc.) not less than 12" from such supports.

5. Where floor slab is in direct contact with earth or fill, rigid steel conduit may be embedded in concrete blister below bottom of slab with 2-inch minimum of concrete cover.

6. Runs of conduit to be embedded in concrete shall be rigidly supported in their proper positions while concrete is being placed. Place conduit separators every 4 feet on centers and securely anchor to prevent movement. Ends of conduits shall be plugged or capped during construction to prevent the entrance of concrete or other foreign matter. Connections shall be checked for tightness before being embedded.

D. Underground Conduits:

1. Buried conduit shall be placed at least 24 inches below grade and be located to avoid interference with other underground piping, foundations, etc. Conduit for Telephone and Power Utilities shall be set to depth as required by Utility engineered drawings and not less than 36" below grade.

2. Conduits placed in concrete which is in contact with earth or water shall be adequately separated from the earth or water by at least 3" of concrete. Concrete encasement shall extend 4" above finished grade or into housekeeping pad at completion of each run.

3. Install expansion couplings in conduit runs crossing expansion or contraction joints in concrete. Expansion couplings shall be zinc coated and watertight.

4. Where other piping systems are encountered or being installed along a raceway route, maintain a 12-inch-minimum vertical separation between raceways and other systems at crossings. Maintain a 12-inch-minimum separation between raceways and other systems in parallel runs. Do not place raceways over valves or couplings in other piping systems. Refer conflicts with these requirements to the Owner's Representative for instructions before further work is done.

5. Underground conduits not encased shall have a minimum 4" sand bedding completely encircling the conduits.

6. Duct taping conduits together is not acceptable. Conduits, installed into concrete pads, shall be installed with a minimum of 2” distance between conduits to allow installation of bushings.

E. Raceway Identification:

1. All conduits and raceways listed in Conduit and Wire Routing Schedule shall have conduit tags at both terminations of each conduit. All conduits and raceways listed in Conduit and Raceway Schedule shall be provided with conduit tags with tag numbers listed in schedule.

2. All spare conduits shall be labeled. Spare conduits that have prefix "X" with a conduit quantity greater than one shall have a unique conduit postfix number assigned to each conduit; i.e., if conduit quantity is 3 for conduit route X0001, then label conduits as X0001A, X0001B, X0001C, etc.

3. Conduit terminating in walls shall be identified by stenciling the conduit number on the wall directly under the conduit.

4. Prior to encasement, concealment, backfilling of conduits, temporary conduit labels shall be provided at each end of conduit. Temporary conduit labels shall be provided on conduits when it leaves an open transition point, junction boxes, terminal boxes, pullboxes, vaults, and manholes, etc. Temporary conduit labels shall have ½-inch (minimum) lettering at all transition points. After encasement and concealment temporary conduit labels shall be placed at each exposed end.

5. Each conduit listed in Conduit and Wire Routing Schedule shall have permanent tags where it enters an open transition point, junction boxes, terminal boxes, pullboxes, vaults, and manholes. Where limited conduit length is exposed, use a ½" washer attached with non-metallic tie wraps and having the conduit ID clearly labeled on both sides with black permanent ink.

6. All existing conduits listed in Conduit and Wire Routing Schedule reused for new work shall have new conduit tags installed at all transition boxes and endpoints. Conduit and Wire Routing Schedule shall be updated as these modifications take place.

F. Workmanship and Installation Requirements:

1. Where field changes are required, every precaution shall be taken to insure that the change is coordinated with other conduit, structural, plumbing, and piping work. Information shall be obtained regarding the completed raceway runs to insure that there will be no interference when the raceway run is extended or revised. A complete record of such changes shall be made on the Record Contract Drawings.

2. Conduits shall be cut square, threaded and reamed to remove sharp or rough edges and burrs. Conduit joints and connections shall be made waterproof and rustproof by application of a non-insulating thread compound, such as white lead or graphite, and zinc sealing material. Each threaded joint shall be thoroughly cleaned to remove cutting oil before the compound is applied.

3. All bends and offsets, where required, shall either be made with factory made bends or shall be field bends made with a conduit bender designed specifically for use with the type of conduit to be bent. Elbows and bends for conduits shall be formed in the field and shall be reasonably free from flattened surfaces, indentations, or kinks. Avoid field bends and offsets where possible. Heating of conduit to facilitate bending shall not be acceptable. Metallic conduits shall be bent cold to prevent damage to the protective coating. All bending shall be gradual and be done smoothly to permit the pulling on insulated electrical wires and cables without incurring damage to the insulation or sheath. Radius of curvature shall be not less than that permitted by NEC.

4. Conduit shall be rigidly secured to panels and other electrical equipment terminal boxes with locknuts and bushings in such a manner that each system shall be electrically continuous throughout.

5. Flexible liquidtight metal conduit shall be used to provide flexible connections between the rigid system and motor conduit boxes or other equipment subject to vibration.

6. To reduce damage to the zinc coating, only strap type wrenches shall be used. All wrench marks, field cut threads, and all other places where the zinc coating is damaged, shall be repaired with zinc-rich galvanizing repair compound.

7. Raceway shall be installed with necessary fittings and supports.

8. Contractor shall limit the number of directional changes of the conduit to total no more than the equivalent of 270 degrees in any run between pull points. Where required for ease of pulling and as necessary to meet code, the Contractor shall supply and install junction or pullboxes, even though not shown on Drawings, at no additional cost to the Owner.

9. Conduit runs between two vaults, pull or junction boxes shall be limited to a maximum of 300 feet, or less 50 feet for every 90 degrees of conduit change in direction.

10. Install and equip conduits and fittings installed outdoors or in other wet locations, entering equipment from bottom unless necessary to enter from side, so as to prevent water from entering the equipment. Top entry of conduits into enclosures located outdoors or in other wet locations is not allowed.

11. Spare or Future Conduits:

    a. Provide a pull rope in each spare and future conduit.

    b. Provide a waterproof label on each end of the pull cords to indicate the destination of the other end.

    c. Provide caps on conduit ends to prevent entrance of dirt or insects.

    d. Label conduits as specified herein.

12. Contractor shall neatly bundle all new and reused wires with ty-wraps.

13. Conduit stubs for future use shall be capped with coupling, nipple, and plug.

14. Conduit between vibrating equipment and outlet boxes or conduits shall be liquid tight flexible electrical conduits.

15. Whenever possible, make bends for exposed conduit stub-ups completely below the surface. Make stubs vertical and arrange neatly.

16. Where conduits turn up in accessible floor areas or under removable partitions, install coupling flush with finish floor surface (exclusive of floor covering). Provide flush threaded plug in this coupling where conduit is not to be extended.

17. For flush mounted panels, run empty conduits from panel to accessible spaces above. Install a minimum of one ¾" conduit for every 3 single pole spare circuit breakers or spaces, or fraction thereof.

18. Running Threads: Do not use running threads. Where such device is needed, use raintight unions or concrete tight couplings.

19. The entire electrical raceway system shall be bonded and form a continuous metallic electrical conductor from service point to every box and shall be terminated with ground bushings connected to the ground bus. Conduits entering enclosures shall be fitted with insulated grounding bushing. All grounding bushings shall be tied to the grounding system with properly sized bonding conductors per the NEC Code.

20. Connection to steel conduit from PVC shall be made with approved threaded adapters.

21. All conduits which are installed shall be capped during construction to prevent the entrance of foreign material.

22. Secure hangers, brackets, conduit straps, supports and electrical equipment by means of toggle bolts on hollow masonry; expansion shields and machine screws or standard preset inserts on concrete or solid masonry; machine screws or bolts on metal surfaces; wood screws on wood construction. Wood or fiber plugs or concrete nails, not acceptable.

23. Special "Soft–Jaw" type pipe clamps shall be used to prevent damage to PVC-coated conduit while field threading and cutting to length.

G. Raceway shall be installed with necessary Warning Tapes:

1. Bury warning tapes approximately 12 inches above all underground concrete-encased duct banks and other conduit runs over 50' in length. Align parallel to and within 3 inches of the centerline of the conduit or duct bank.

H. Cutting and Patching:

1. The Contractor shall do all core drilling, cutting, and patching required to install work at no additional cost to the Owner. Core drilling, cutting, and patching is considered standard work to be done at existing facilities, therefore, this work is not specifically called out on Drawings. Any core drilling or cutting which may impair the structure shall require prior approval by the Engineer. Core drilling, cutting, and patching shall be done only by skilled labor of the respective trades. All surfaces shall be restored to their original condition after core drilling, cutting, and patching and made watertight.

I. Seals:

1. Seal around all conduits, wires, and cables penetrating between panels, any other boxes that house electrical and instrumentation components, walls, ceilings, and floors in all buildings with a fire stop material. Seal shall be made at both ends of the conduit with a fire stop putty. Seal shall have a minimum two hour rating. Fire stop sealing shall be International Protective Coatings Flamesafe, or approved equal.

2. Conduit entrances: Seal each conduit entrance from below grade into the MCC and other electrical enclosures with plugging compound sealant to prevent the entrance of insects and rodents. Conduits between the enclosures shall be sealed with plugging compound sealant on each end. Plugging compound sealant shall be PRC-DeSoto (formerly Courtaulds) Aerospace Semco PR-868 or approved equal.

3. Seal all conduits to prevent water traveling through conduits into buildings, junction boxes, underground facilities, electrical enclosures, panels, instruments.

4. Install conduit drain boxes and plug conduit interior to form an effective barrier to keep out water traveling into equipment or instrumentation from conduit installed higher than equipment or instrumentation.

5. Conduit entrances in the bottom of MCCs, power distribution panels, switchboards, and enclosures shall project into the enclosure a minimum of two inches to prevent water from entering conduits.

J. Excavation and Back Filling:

1. At all times during the excavation and backfilling, the Contractor shall provide barricades, fences, guard rails, etc., to safeguard authorized personnel, and the general public from excavated trenches. Where Access is Deemed Necessary by the Owner, the Contractor shall provide trench plates to allow said access over excavated areas (traffic of all types).

2. Excavations: Provide the excavation for Utility power and telephone services, electrical, and instrumentation equipment foundations and trenches for conduits and ductbanks as necessary. Backfill and surface all areas in accordance with other Contract Sections. Excavations shall be in accordance with other Contract Sections.

    a. Underground conduits outside of structures, excluding utility conduits, shall have a minimum cover of 24 inches. Utility power and telephone conduits shall have a minimum cover of 36 inches.

    b. Trenches for all conduits below floor slabs and underground shall be excavated to the required depths. Conduits under floor slabs shall have trenches no deeper than is required to properly contain bends within walls.

    c. All trenching and underground work shall be closely coordinated with the Owner and Engineer. Contractor shall be responsible for locating, and avoiding disruption of, all existing underground facilities such as gas lines, water lines, sewer, fire protection lines, and existing underground electrical facilities. Any damage caused by the Contractor must be repaired at the Contractor's cost, to the satisfaction of the Owner.

    d. All trenching shall be done as to minimize disruption to normal plant or construction operations. All open trenches shall be suitably marked and/or protected to avoid any accidents or injuries to workers or plant personnel.

    e. Where new electrical ducts intersect existing facilities, at essentially the same depth, Contractor shall gradually divert the electrical facilities down, under, and back up around the existing facilities.

    f. All excavations shall be backfilled and resurfaced to match surfaces prior to and adjacent to excavation.

3. Back filling shall be done only after conduits have been inspected by Owner. Excavation and back fill of lines and conduits shall conform to the requirements of the Earthwork Section of these Specifications, unless modified on plans.

    a. Backfill, Non-Paved Areas: Use native backfill, compacted in 6 inch layers to 90 percent relative compaction. Final backfill elevation shall match existing.

b. Backfill, Paved Areas:

1) Use clean imported sand rated for use under paved areas.

2) Imported sand shall be free from organic material, trash, debris and rubbish.

3) Compact trench backfill by manual methods. Water flooding or jetting is not permitted.

4. Repave any area that was paved prior to excavation. Backfill and surface all areas as shown on the Drawings or where not shown to the original condition that was present prior to the excavation.

3.2 WARRANTY

Provide warranty as specified in Electrical Section 16010 - Warranty.

END OF SECTION

SECTION 16115

DUCT BANKS, VAULTS AND PULL BOXES

PART 1 GENERAL

1.1 SCOPE OF WORK

A. The Contractor shall install, ready for use, the duct banks, vaults, and pull boxes as specified herein. This document describes the function and operation of the system and particular components, but does not necessarily describe all necessary devices. All components and devices shall be furnished and installed as required to provide duct banks, vaults and pull boxes for accomplishing the functions and meeting the performance set forth hereinafter at no additional cost to the Owner.

B. Furnish all required labor, materials, project equipment, tools, construction equipment, safety equipment, transportation, test equipment, incidentals, and services to provide duct banks, vaults, and pull boxes as shown on the Drawings, included in these Specifications as recommended by suppliers, or required for complete installation.

C. This section scope of work includes providing and installing:

1. Duct banks, pull boxes, vaults, and associated hardware.
2. All necessary hardware, fittings, and devices to connect the electrical equipment and grounding system provided under other Sections.
3. Trenching and backfilling.

1.2 RELATED WORK

Junction boxes to be per Section 16140 – Wiring Devices.

1.3 SUBMITTALS AND DRAWINGS

A. Provide submittals and Drawings as specified in Section 01300.

B. Submit for approval, calculation verifying pull box and vault size and layout of duct banks.

C. Submit for approval, each rack cable and wire support layout proposed for each vault prior to installation.

PART 2 MATERIALS

2.1 GENERAL

A. The Contractor shall use special construction methods, and materials as shown on the Contract Drawings, which shall take precedence over any general methods and materials specified in this Section.

B. The location of pull boxes, vaults, and duct banks are shown on Contract drawing at their approximate location. The Contractor shall relocate theses pullboxes, vaults, and duct banks to avoid conflict with other underground utilities at no additional cost to Owner.

C. Provide larger pullboxes and junction boxes to accommodate the conduits and wires shown in the Conduit & Wire Routing schedule at no additional cost to Owner.

2.2 DUCT BANKS

Duct banks, materials, and installation shall meet all requirements of the NEC and the following minimum Specifications:

A. Concrete shall conform to ASTM C150, with 7-day 2500 PSI compressive strength and minimum cement content of 55%. Use a color additive for identification purposes: utility red or coral red "Chromix C-22," as manufactured by Sika or equal. Add the color additive while the concrete is being mixed, using the quantity per cubic yard of concrete recommended by the color additive Manufacturer for the class of concrete indicated.

2.3 PULL BOXES AND VAULTS

A. General:

1. Box dimensions shall be the minimum size as shown on Contract Drawings and in accordance with size, quantity of conductors, and conduit clearances per NEC article 314 requirements.

2. A copper ground bus shall be provided in each pullbox and vault. Screw type lugs shall be provided for connection of grounding conductors. All grounding conductors shall be sized as shown on plans or in accordance with NEC Table 250-122, whichever is larger.

B. Aboveground Pull Boxes:

1. Surface Mounted Pull Boxes:

a. Pull boxes in "damp", "wet" or NEMA 4X locations shall be stainless steel, with the exception of "corrosive" locations. Accessories and hardware shall be stainless steel.

b. Non-metallic pull boxes shall be used in "corrosive" locations, unless noted otherwise. Non-metallic pull boxes shall be molded PVC or hot compressed reinforced fiberglass. Conduit connections shall be made with solvent cement fittings or other watertight non-metallic fittings. Accessories and hardware shall be stainless steel.

c. Pull boxes in NEMA 12 or 3R areas shall be galvanized steel (unless specifically called out on Contract drawings) and painted to match surrounding surfaces or as designated by Engineer.

d. Pull boxes larger than 20" H by 16" W shall have hinges access covers.

e. Covers shall be attached with stainless steel screws. No devices, screws, rivets, or bolts shall protrude through the exterior surface unless specifically shown on the Drawings.

f. Boxes shall be Circle AW, Hoffman, or approved equal.

2.4 UNDERGROUND PULL BOXES AND VAULTS

A. Underground pull boxes and vaults, where shown or required by length of conduit runs, shall be prefabricated 3000PSI reinforced steel concrete type with the minimum size shown on the Drawings. Provide larger pull boxes/vaults when necessary to allow for adequate pull area or to accommodate the number of conduits entering box. Extension sections shall be provided as necessary to reach the depth of underground conduits.

B. Pullboxes shall have diamond plate galvanized steel full H/20 loading rated traffic covers with galvanized steel hold down bolts and hardware.

C. Vaults shall be precast concrete with traffic rated covers designed for full H/20 loading. Vaults shall have recessed checker plate, galvanized, ¼" (minimum) steel cover. Dimensions shall be as specified on the Drawings. Vaults shall be constructed of 3000 psi reinforced steel concrete.

D. Underground vaults shall be provided with end hinged, torsion spring opening assist type cover assemblies. Provide single leaf assemblies for 2 by 3 feet opening. Provide double leaf assemblies for pullboxes and vaults with openings larger than 2 by 3 feet.

E. Underground pullboxes, vaults and handholes shall be Utility Vault, Christy Concrete Products, Brooks, or approved equal.

2.5 PULL BOX AND VAULT IDENTIFICATION

A. Underground Pull Box and Vault Cover Identification: engrave or bead weld vault and pull box covers with minimum thickness of ¼".

B. Aboveground Pull Box Cover Identification: stainless steel screw attached phenolic nameplates with 1/2" letters meeting the requirements of Section 16144 Nameplates.

C. Identification to indicate services contained within each pull box as shown on Contract E-series Drawings.

PART 3 EXECUTION

3.1 WORKMANSHIP

A. All work in this Section shall conform to the codes and standards specified in Section 16010 - Electrical.

B. The Supplier shall employ personnel that are skilled and experienced in the installation of duct banks, vaults, and pull boxes. All installation labor shall be performed by qualified personnel who have had experience on similar projects. Provide first class workmanship for all installations.

C. Ensure that all vaults and pull boxes fit properly in their installations.

D. Perform any required work to correct that in the opinion of the Engineer are improper installations at no additional expense to the Owner.

3.2 INSTALLATION

A. General:

1. Install all products per Electrical 16010 - Installation, General.

2. Keep boxes, vaults, and other openings closed at all times when not being accessed to prevent entry of foreign matter. Cover to protect them against dirt, paint, water, chemical, or mechanical damage before and during construction period. Restore to original condition damaged products prior to final acceptance.

3. Duct banks and raceways shall not leak water into dry interiors. This applies to duct banks and raceways entering structures, vaults, basements, tunnels, and buildings. Replace defective sections with new duct banks and raceways which leak water into dry spaces.

4. Place non-shrink grout between conduits and void in sides of underground pull boxes and vaults.

B. Duct Banks:

1. Direct burial of conduit shall not be permitted where concrete duct banks are required. Minimum size of conduit in duct banks interconnecting vaults shall be 1 inch.

2. All ducts shall be inspected by the Owner prior to pouring concrete. The Owner will inspect for backfill compaction, drainage slope, spacers, flotation ties and conduit condition, joints, and end bells. Concrete shall not be poured until this inspection is complete.

3. Conduit placed in concrete which is in contact with the earth shall be separated from the earth by at least 4 inches of concrete. Clearances equal to the nominal conduit diameter, but not less than 1½ inches, shall be maintained between conduits. Clearances of less than 1½ inches at conduit crossing and terminating locations may be acceptable with Owner written approval.

4. Expansion fittings shall be provided whenever embedded conduit crosses building expansion joints, between two adjacent structures, and between a duct bank and structure.

5. Plastic conduit spacers shall be located 5 feet on centers. Plastic spacers shall be of the type manufactured specifically for spacing conduits in duct banks. The spacers shall be secured to the conduits by wire ties. The duct bank shall be securely anchored to prevent conduit flotation while the concrete is being placed. Conduit runs shall be watertight. Spacing for spacers shall be as recommended by manufacturer for size of conduit. Spacers shall be interlocking and rated for concrete encasement. Concrete duct bank spacers shall be Underground Devices Wunpeece or approved equal.

6. The ends of conduits shall be protected from damage during construction by using plastic plugs.

7. Conduits shall be thoroughly swabbed inside immediately upon completion of pouring concrete. After the concrete has set, but before backfilling, a mandrel having a diameter equal to the nominal conduit inside diameter minus 1/2 inch, and not less than 4 inches long, shall be pulled through each conduit. The mandrel shall be lead covered or painted white to indicate any protrusion on the inside of the conduit. The protrusion shall be removed or the conduit Section replaced.

8. Duct banks shall maintain a steady slope between the high point of the duct bank to the vault or pull box. Maintain a grade of at least 1 inch per 100 feet, either from one vault or pull box to the next or from a high point between them, depending on the surface contour. Slope duct banks downward away from buildings to pull boxes or vaults.

9. Conduits entering vaults and pull boxes shall have end bells with conduit tags.

10. Conduits tags shall be provided and installed as specified in Section 16110 – Conduits in all pull boxes and vaults.

11. The entire electrical raceway system shall be bonded and form a continuous metallic electrical conductor from service point to every box. Metallic conduits shall be terminated with ground bushings connected to the ground bus or to next section of conduit run.

12. Where other non-electrical systems are encountered or being installed along a duct bank route, maintain a 12-inch-minimum vertical separation between duct bank and other systems at crossings. Maintain a 12-inch-minimum separation between duct banks and other non-electrical systems in parallel runs. Do not place duct banks over valves or couplings in other piping systems. Refer conflicts with these requirements to the Owner's Representative for instructions before further work is done.

13. Conduit Separation in Duct Banks: "E," "XE," "L," "XL," "P" and "XP" prefixed conduit groups shall be separated a minimum of 12" from all other conduit groups.

14. Concrete encasement shall extend continuously to 4" above finished grade or into housekeeping pad at completion of each run; except for fiberglass pull boxes, where duct bank to stop at horizontal and space above filled with pea gravel.

C. Pull Boxes and Vaults Installation:

1. Pull boxes and vaults shall be installed accurately to match the surrounding building outline, pavement or sidewalk grade. Set pullboxes parallel or perpendicular with adjacent structures.

2. Size pull boxes and vaults to meet National Electrical Code requirements and to provide sufficient room for the future conduits and cables indicated on the Drawings at no additional cost to Owner.

3. Contractor shall limit the number of directional changes of the conduit to total no more than 270 degrees in any run between pull points. Where required for ease of pulling and as necessary to meet Code, the Contractor shall supply and install junction, vaults, or pullboxes, even though not shown on Drawings, at no additional cost to the Owner.

4. Conduit runs between two vaults, pull, or junction boxes shall be limited to a maximum of 300 feet, or less 50 feet for every 90 degrees of change in direction.

5. Set underground pull boxes and vaults level on a crushed rock base with a minimum 18 inches thick with horizontal dimensions same as bottom of pull box plus 8 inches minimum all around. Crushed rock shall be 3/4 inch maximum size, 1/4" minimum size.

6. Install covers flush within finished paved or concrete surfaces. In unfinished areas, install covers one inch (1") above finished grade. In areas where a snow plow would access, install covers ½" below grade.

7. In pullboxes and vaults separate power "E, L, P, XE, XL, and XP" wiring to one side within and all other wiring to opposite side in bundles. In vault, these separate bundles are to be supported on plastic cable supports rated for the bundle loading.

D. Vault Installation:

1. Vaults shall be set plumb. Vault covers, unless otherwise shown on Contract Drawings, shall be set at grade.

2. Seal vault joints located between box upper section, extensions and bottom with joint sealing compound to make watertight.

3. Provide plastic cable racks for all cables passing through each vault. No wires or cables are permitted to lie on bottom of the vault. Conductors of different voltages or types shall be suspended from different "saddles" on different sides. Cable racks shall be U.L. listed and suitable for mounting in vault. Design of saddle shall be capture type such that cables shall not be required to be tied to rack. Provide number of cable racks and sizes as required for each vault. Cable racks shall be Underground Devices Saddle Rack or approved equal.

E. Pull Boxes and Vaults Entry: Conduits entering underground pull boxes and vaults shall be horizontal, except when required otherwise by Power and Telephone Utility Standards. Conduits shall not enter through the concrete bottom of boxes, or vaults, except for vaults or boxes with bottoms shown at or above grade.

F. Provide Excavation and Back Filling per requirements of Section 16110-Conduits.

G. Openings:

1. Leave no unused opening in any pull box or vault. Install close-up plugs as required to seal openings.

H. Cleaning:

1. Prior to project completion, clean out debris from all pullboxes and vaults.

2. Remove dirt from vaults with concrete bottoms.

3.3 WARRANTY

Provide warranty as specified in Electrical Section 16010 - Warranty.

END OF SECTION

SECTION 16120

WIRES, FUSES, AND TERMINAL BLOCKS

PART 1 GENERAL

1.1 SCOPE OF WORK

A. The Contractor shall assemble, ready for use, the electrical and instrumentation system with wires, fuses, and terminal blocks as specified herein.

B. Furnish all required labor, materials, tools, test equipment, incidentals, and services to provide a complete and operational electrical and instrumentation system with wire and electrical devices as shown on the Drawings, included in these Specifications or required for fully operating facilities.

C. Work includes that specified in Section 16010 - Electrical.

1.2 SUBMITTALS AND DRAWINGS

Descriptive literature for all materials furnished under this Section shall be submitted in accordance with Section 01300.

1.3 QUALITY ASSURANCE

A. All materials selected for the manufacture of the hardware shall be the best available for the purpose for which they are used, considering strength, ductility, durability and the best engineering practice.

B. Conductors shall be less than 12 months old.

C. All like parts shall be interchangeable.

PART 2 MATERIALS

2.1 WIRING AND ELECTRICAL DEVICES

A. General:

1. The Electrical Contractor and the electrical and instrumentation system suppliers shall provide and install wiring and devices as specified herein and per Division 16 requirements.

B. Low Voltage Wire and Cable:

1. General: Low voltage conductors shall be used for power, control, lighting and miscellaneous circuits. This Section applies to all wires or conductors used internally for all electrical equipment or externally for field wiring. Wire shall be new, plainly marked with UL label, gauge, voltage, type of insulation, and Manufacturer's name.

2. Low voltage wire shall conform with the following:

a. NEMA standards WC70 and UL requirements.

b. Class B stranding. Solid conductors may be used for lighting and receptacle circuits.

c. Conductors shall be copper with a minimum of 98% conductivity.

d. Insulation type for conductors shall be XHHW insulation rated 90 °C in dry locations and 75 °C in wet or underground locations.

e. Insulation of all conductors shall be rated 600 volt or higher.

f. Field wire minimum AWG sizes:

1) #12 for wires used for individual conductor circuits 480 volts and above, except for PLC I/O which may be size listed in Conduit and Wire Routing Schedule.

2) #14 for wires used for individual conductor circuits below 480 volt.

g. Non-field or equipment wire minimum AWG sizes if properly protected by fuse or breaker:

1) #14 for wires used for individual conductor circuits 100 volt and above, except for PLC I/O wiring which may be #16.

2) #18 for wires used for individual conductor circuits below 100 volt.

C. Color Code:

1. The color code of all wire shall conform with the following table:

DESCRIPTION	PHASE/CODE LETTER	FIELD WIRE WIRE OR TAPE COLOR	NON-FIELD WIRE COLOR
480 V, 3 PHASE	A	BROWN	BROWN
	B	ORANGE	ORANGE
	C	YELLOW	YELLOW
240 V or 208 V, 3P	A	BLACK	-
	B	RED (ORANGE if high leg)	-
	C	BLUE	-
240 / 120 V, 1 P	L1	BLACK	BLACK
	L2	RED	-
12V POSITIVE	12P	DARK BLUE	DARK BLUE
12V NEGATIVE	12N	BLACK/RED STRIPE	BLACK/RED STRIPE
24V POSITIVE	24P	PINK	PINK
24V NEGATIVE	24N	BLACK/WHITE STRIPE	BLACK/WHITE STRIPE
AC CONTROL		VIOLET	RED (YELLOW FOR FOREIGN CIRCUITS)
DC CONTROL		LIGHT BLUE	LIGHT BLUE
NEUTRAL	N	WHITE	WHITE
GROUND	G	GREEN	GREEN
SHIELDED PAIR	+	WHITE OR CLEAR	WHITE OR CLEAR
	-	BLACK	BLACK

2. No other colors shall be used without prior written approval of the Owner.

3. The same color shall be connected to the same phase throughout the panel.

4. All wires shall be properly fused or protected by a breaker at the amperage rating allowed by the NEC.

5. Phase color insulation shall be provided for complete length of #8 wire or smaller, colored phase tape is <u>not</u> allowed on #8 and smaller wire.

6. Neutral used for AC Control shall be white.

D. Instrument Cable:

1. All 4-20mA and 1-5VDC inside instrument and control panel cables shall conform with the following:

   a. Signal wiring shall be shielded twisted pair with #18 AWG tinned copper stranded conductors and shield drain conductor.

b. Conductor insulation shall be polyethylene rated 600VAC, 90° C and outer jacket shall be PVC.

c. A metal foil shield shall completely surround the signal conductors.

d. Multiple pair cables with individually shielded pairs may be used only with prior written approval of the Engineer.

2. All field 4-20mA instrument cables and cables shall conform with the following:

a. Signal wiring shall be shielded twisted pair with a minimum #16 AWG, tinned copper stranded conductors and shield drain conductor.

b. Conductor insulation shall be polyethylene rated 600VAC, 90° C and outer jacket shall be PVC and be "Tray Cable" rated.

c. A metal foil shield shall completely surround the signal conductors.

d. Multiple pair cables with individually shielded pairs may be used only with prior approval written of the Engineer.

3. Instrument Cables shall be Okonite, Okoseal-N Type P-OS, Belden, or approved equal. Note, multi-pair T.S.PR. Cables may be reduced in size to that listed in Conduit and Wire Routing Schedule.

E. Special Purpose Wiring:

1. Manufacturer Supplied Cables (MNFR CBL): Cables and wiring for special systems shall be provided by the manufacturer with the equipment and installed per the manufacturer's recommendations.

2. VFD rated wire: All VFD load side power wiring shall have rated blended composite semi-conductive, tray-cable rated, UL-type TC 90°C insulation and 100% shielding with foil tape & tinned copper braid.

3. CAT 6 Cable

a. Underground (UG) buried CAT 5 communication cable meet the following requirements:

b. CAT 6 communication cable in underground (UG) conduit shall meet the following requirements:

1) TIA/EIA-568-B Category 6 Specifications.

2) #24 AWG solid bare copper conductor, 4 or 25 pair shielded twisted pair per “Conduit & Wire Routing Schedule.”

3) Rated for direct burial application.

4) Insulation: Solid Polyolefin, 600v.

5) Filling compound: 80°C extended thermoplastic rubber.

6) Outer Jacket: Water and UV resistant polyethylene.

7) Electrically continuous aluminum shield.

c. Indoor CAT 6 communication cable shall meet the following requirements:

1) TIA/EIA-568-B Category 6 specifications.

2) #24 AWG solid bare copper conductor, 4 twisted pairs.

3) Thermoplastic Dielectric type, 600v.

4) Shielded bulk cable.

5) UL listed.

6) Non-plenum usage rated when routed in conduit.

7) Plenum usage rated when routed in plenum spaces.

F. Wire Marking:

1. Wire identification: All wire terminations including field interconnect as well as wiring interior MCC cubicles, switchboard, panels, equipment, junction panels and boxes shall be identified with machine printed labels. Hand lettered labels are not acceptable and shall be replaced at the Contractor's expense. The wire identification code for all field interconnect and panel interior wiring, shall be similar to the designations shown on the Contract example drawings.

2. Wire Labels: The labels shall be machine printed with indelible ink, heat shrink type capable of accepting a minimum of 23 machine printed characters per sleeve label by Brady "Bradysleeve" or equal. Labeling shall be neatly installed for visibility and shall be clearly legible. Each wire and conductor shall be labeled with wire label as shown on approved loop, elementary and interconnect Drawings. Labels shall not be wrap-around or snap-on type.

3. Where there is insufficient space for labels on locally interconnected neutral wires such as jumpers between adjacent auxiliary relay coil neutral terminals, these labels may be omitted. "Locally" is defined as wires no longer than 8".

4. Wire labels for lighting and receptacles shall be installed and consist of the panelboard and circuit number (i.e., Panelboard "LP1," circuit breaker #3 would have wire label line "LP1-L3" and neutral "LP1-N3").

5. All control and signal wiring terminations shall have the correct wire label applied prior to making connection.

6. Numerically identify every conductor within each multi-pair and triad tray cable.

7. Ethernet patch cables and fiber cables shall be labeled with primary devices it is connected to (i.e. “PLC”, “OI”, “PLC-2” etc.). Fiber cables shall be labeled with source / designation label. Label shall be white plastic with black machine printed lettering as produced by a KROY or similar machine with lettering no smaller than 3/8”. Securely attach to cable with clear tape.

8. Extra wire was intentionally placed in the “Conduit & Wire Routing Schedule” and shall be labeled on both ends with a unique wire label. All spare wires shall be labeled with equipment number followed by X1, X2, etc. (i.e., P11001-X1 for first spare wire.

G. Pulling Compound:

1. Use only cable pulling compound which is approved by the manufacturer of the cable as being compatible with cable insulation and jacket materials.

H. Distribution:

1. Panel Power:

a. All electrical and instrumentation panels shall be equipped with a main power disconnect circuit breaker and power distribution circuit breakers. The main power disconnect breaker shall disconnect all power to panel. Distribution circuit breakers shall be single pole. The circuit breakers shall be mounted on a standard DIN rail, and shall be Allen - Bradley Channel Mounting Type, or equal.

b. For each power distribution circuit breaker, a neutral return terminal block shall be installed at the bottom of the breaker rail.

2. Analog Signals:

a. Analog signal transmission between electric or electronic instruments shall be 4-20 milliamperes and shall operate at 24 volts DC unless otherwise specified. Milliampere signals shall be current regulated and shall not be affected by changes in load resistance within the unit's rating. Provide isolated current amplifiers wherever the loop load resistance exceeds the current signal transmitter's rating. Associated shunt resistors shall be located on rail-mounted terminal blocks. Exposed resistor leads shall be insulated with heat-shrink tubing.

b. Each analog loop source shall be individually fused at the panel analog interface terminal block. Each analog loop shall be provided with a separate fuse, positive terminal, negative terminal and ground terminal at each Control panel

c. Signal transmission from remote or field electric and electronic devices shall be 4-20 mA. Nonstandard transmission methods such as impulse duration, pulse rate, and voltage regulated will not be permitted except where specifically noted. Outputs of equipment that are not of the standard signals as outlined, shall have the output immediately raised and/or converted to compatible standard signals for remote transmission.

3. Terminal Blocks and Fuses:

   a. General:

      1) Each terminal block shall have a unique identifying alphanumeric code. Terminal numbers shall be assigned starting lowest number at one end, incrementing in sequence top to bottom or left to right (i.e., 1,2,3,4....).

      2) Numbers shall be assigned to all blocks except grounding blocks. Fuse blocks shall be assigned unique tag numbers such as FU1, FU2. No two fuses in a common enclosure shall be assigned the same tag number. Fuse blocks shall also be provided with markers identifying the current rating of the fuse.

      3) A plastic marking tab shall be provided to label each individual terminal block. Each tab shall have a unique number/letter for each terminal which is identical to the "elementary" and "loop" diagram wire designation. Numbers on tabs shall be machine printed and 1/8-inch high.

      4) Terminal blocks shall be physically separated into groups by the level of signal and voltage served. Power and control wiring above 100 volts shall have a separate group of terminal blocks from terminal blocks for wiring below 100 volts, intermixing of these two types of wiring on the same group of terminal blocks is not allowed.

      5) As a minimum, provide a ground terminal or connection point for the power system grounding conductor for each terminal block group.

      6) Terminate field wiring on the "field side" of the terminal blocks. Do not connect internal panel wiring to the "field side" of the terminal blocks. Do not connect field wiring to the "panel side" of the terminal block.

      7) Provide a separate terminal block for every two neutral terminals or as coordinated with the interconnect diagrams.

      8) Terminal blocks shall be, DIN rail, and 600V rated.

      9) Provide terminal blocks with "follower" plates which compress the wires and have wire guide tangs for ease of maintenance. Terminal blocks which compress the wires with direct screw compression are unacceptable.

      10) All power, control and instrument wires entering and leaving a compartment shall terminate on terminal blocks.

   b. Control/Signal – Control and Signal Panel Terminal Blocks, (Excluding Motor Starter Cubicles):

      1) Power Distribution, 120 VAC

a) Terminal Blocks: Compression -clamp, black bodies, 600 volt rating, Entrelec M4/6 or approved equal.

b) Fuse Blocks: Compression Clamp, black bodies, 600 volt rating, with fuse blown indicator, Entrelec ML 10/13.SFL or approved equal.

2) Control Circuits, Analog and Digital

a) Terminal Blocks: Compression-clamp, grey bodies, 600 volt rating, Entrelec M4/6 or approved equal.

b) Fuse Blocks: Compression Clamp, grey bodies, 600 volt rating, Entrelec M 4/8.SF or approved equal.

c) Provide a separate fuse and neutral terminal block for each PLC input or output card.

d) The configuration of analog and discrete input/output terminals and associated accessories shall be submitted for approval by the Owner. Colored marking tabs inserted into terminal blocks shall be Entrelec or approved equal. Color coding for all MCC Control Compartment or Panel Section terminal tabs shall be:

Description	Color	TB Code Letter
Digital Inputs	Red	R
Digital Outputs	Yellow	Y
Analog Inputs	Blue	B
Analog Outputs	Orange	O
Distribution / Fuses	Grey	A
Ground	Green	G
Neutral	White	W

3) Analog input and output terminal blocks, in addition to terminal block numbering, shall have "+," "-" and ground prefabricated symbol plastic terminal label inserts.

4) No more than two field wires are to be inserted in any single terminal block.

5) All PLC spare I/O points including spares shall be wired to terminal blocks.

c. Miscellaneous - Terminal Blocks, for locations other than MCC cubicles and Control/Signal Panels:

1) Provide terminal blocks rate a minimum of 20 amps at 600VAC.

2) Terminal blocks shall be Buchanan 500 series, or approved equal.

I. Splices:

1. No splices are allowed with exceptions as stated in Electrical Section 16010 - Construction Methods, General.

PART 3 EXECUTION

3.1 WORKMANSHIP

A. All work in this Section shall conform to the Codes and Standards specified in Section 16010 - Electrical.

B. The Supplier shall employ personnel that are skilled and experienced in the installation and wiring of electrical enclosure panels, devices, accessories, and assemblies. All installation labor shall be performed by qualified personnel who have had experience on similar projects. Provide first class workmanship for all installations.

C. Ensure that all equipment and materials fit properly in their installations.

D. Perform any required work to correct that in the opinion of the Engineer are improper installations at no additional expense to the Owner.

3.2 INSTALLATION

A. System:

1. Install all products per Electrical Section 16010 - Installation, General.
2. All panels and enclosures shall be completely factory wired and tested before shipment.
3. Lace tie with cord, minimum length 2', each wire bundle entering any enclosure, vault, pull box, cable tray or any other enclosure. Place label with conduit number associated with wire on each of these bundles when there is no place to attach label to conduit.
4. Pulling lubricant shall be used when installing all wire in conduits.

B. Wiring Methods:

1. Wiring Separation: Wires carrying 100 volts and above shall be physically separated from lower voltage wiring by using separate bundles or wire ways with sufficient distance to minimize the introduction of noise, crossing only at 90 degree angles.

2. Harness: All wiring shall be neatly bundled and laced with plastic tie-wraps, anchored in place by screw attached retainer. Where space is available, all wiring shall be run in slotted plastic wire ways or channels with dust covers. Wire ways or channels shall be sized such that the wire fill does not exceed 60%. Tie-wraps shall be T&B TY-RAP, or approved equal. Wiring inside of conduit, plastic wire duct, duct bank Sections or corrugated loom tubing is not to be wire tied or taped together.

3. Hinge Loops: Where wiring crosses hinged surfaces, provide a "U" shaped hinge loop protected by black head stabilized corrugated loom tubing as manufactured by Panduit # CLT100N-C630, or approved equal. The hinge loop shall be of sufficient length to permit opening and closing of the door without stressing any of the terminations or connections. Corrugated flexible wire duct shall be Graybar T25N, or approved equal.

4. Retainers: Wire ways, retainers, and other devices shall be screw-mounted with round-head 316 stainless steel screws or mechanically mounted by push-in or snap-in attachments. Glue or sticky back attachment of any type or style shall not be used. Retainers shall be T&B TC series, or approved equal.

5. Routing:

    a. Wires shall be routed in slotted plastic wire-ways with snap covers. Wires carrying VAC shall be separated as much as possible from other wires and signal cables, and shall be routed only in wireways for VAC. If the power wiring has to cross the signal wiring, the crossing shall be as close to a right angle as possible. Wireways for signal and VDC wiring shall be used separate from all VAC wireways. Routing of VAC wiring in combined ducts shall not be allowed. Wires and cable shall be routed along the shortest route between termination points, excepting routes which would result in routing VAC and other wires and cables in the same duct. Wires and cables shall have sufficient length to allow slack and to avoid any strain or tension in the wire or cable. Wires and cables shall be placed in the wireways in a straight, neat and organized fashion and shall not be kinked, tangled, or twisted together. Additional wire ducting shall be provided for use by the Electrical Subcontractor for routing field wires to their landing points in the each electrical enclosure and control panel.

    b. Wiring that cannot be routed in wireways, shall be neatly bundled, treed, and laced with plastic ties. Wiring across door hinges shall be carefully made up and supported to avoid straining and chafing of the conductors or from putting any strain on their terminals.

    c. Exposed Tie-Wraps: Plastic tie-wraps used in all outdoor or exposed applications shall be sun resistant UV rated for outdoor usage.

6. Terminations: Single wire and cable conductors shall be terminated according to the requirements of the terminal device.

    a. For screw terminals, appropriately sized locking forked spade lugs shall be used. Lugs shall be crimp on type that form gas tight connections. All

crimping shall be done using a calibrated crimping tool made specifically for the lug type and size being crimped.

b. On shielded cables, the drain wire shall be covered with heat shrunk insulating tubing along its full bare length between the cable jacket and the terminal lug or terminal pressure plate. To insulate the foil or braid shielding use heat shrink tubing sized for the wire and shrunk into place with the properly sized heat gun.

c. Minimum distance between terminal blocks and relays or other terminations and wireways shall be 2".

d. The wire label codes for each end of the same wire shall be identical.

7. Spare Terminals: Provide a minimum of 20% spare terminals in all MCC cubicles, electrical and instrumentation enclosures, and instrumentation/control panels.

3.3 WARRANTY

Provide warranty as specified in Electrical Section 16010 - Warranty.

END OF SECTION

SECTION 16140

WIRING DEVICES

PART 1 -- GENERAL

1.1 THE SUMMARY

A. The CONTRACTOR shall provide wiring devices, complete and operable, as indicated in accordance with the Contract Documents.

B. The requirements of Section 16010 Electrical apply to this Section.

1.2 CONTRACTOR SUBMITTALS

A. Furnish submittals in accordance with the requirements of Section 01300 – Contractor Submittals.

B. Shop Drawings

1. Submit complete catalog cuts of switches, receptacles, enclosures, covers and appurtenances, marked to clearly identify the proposed materials.

2. Submit documentation showing that the proposed materials comply with the requirements of NEC and U.L.

3. Submit documentation of the manufacturer's qualifications.

PART 2 -- PRODUCTS

2.1 GENERAL

A. Devices shall carry the U.L. label, and shall be designed for use with stranded copper conductors.

B. Color

1. General purpose duplex receptacles and toggle switch handles shall be Brown everywhere except unless otherwise indicated.

C. Receptacles and switches shall be of specification grade and shall conform to NEMA WD-1, Federal Specifications W-C-596E and W-S-896E, respectively.

2.2 GENERAL PURPOSE RECEPTACLES

A. Duplex receptacles shall be of the polarized 3-wire type for use with a 3-wire cord with grounded lead, and one designated stud shall be permanently grounded to the conduit system in accordance with NEC article 406.4.

B. Damp/Wet Areas

1. Receptacles for damp/wet locations shall be weather-resistant with extra duty, metal in-use listed covers in accordance with NEC Article 406.8.

C. GFCIs

1. Ground-fault circuit-interrupting receptacles (GFCIs) shall be installed at the indicated locations and as required by the NEC.

2. GFCIs shall be duplex receptacles, of specification grade, and tripping at 5 mA.

3. GFCI ratings shall be 125V, 20 amperes, NEMA WD-1, Configuration 5-20R, and capable of interrupting 5,000 amperes without damage.

4. GFCIs shall be weather resistant-listed in accordance with NEC Article 406.8.

5. Feed-through-type GFCIs serving standard receptacles will not be permitted.

a. Leviton: G5362-WT
b. **Hubbel:** GFR5362SG
c. **Or Equal**

2.3 ENCLOSURES AND COVERS

A. Surface-mounted switches and receptacles shall be housed in FS or FD-type weatherproof conduit fittings.

B. Switch and receptacle covers on surface-mounted boxes shall be constructed of die-cast copper-free aluminum.

1. **Appleton**: FSK
2. **Crouse-Hinds**: DS185 and WLRD-1
3. **Hubbell Killark**: FZ and FC
4. **Or Equal**

C. Wet Locations

1. Receptacles in wet locations shall be provided with a hinged metallic cover/enclosure marked "Suitable for Wet Locations when in use" and "UL Listed."

2. Provide a gasket between the enclosure and the mounting surface, and between the hinged cover and mounting plate/base.

a. **Appleton**: WCIU

b. **Crouse-Hinds**: TP74
c. **Hubbell TayMac:** Extra Duty
d. Or Equal

2.4 NAMEPLATES

A. Provide nameplates or equivalent markings on the switch enclosures to indicate the ON and OFF positions of each switch.

B. ON and OFF for 3-way or 4-way switches will not be accepted.

C. Provide receptacles for special purposes with nameplates indicating their use.

D. Nameplates shall meet the requirements of Section 26 00 00 – Electrical Work, General.

PART 3 -- EXECUTION

3.1 GENERAL

A. Perform WORK in accordance with the requirements of the NEC.

3.2 CONNECTION

A. Rigidly attach wiring devices in accordance with the NEC and as indicated, avoiding interference with other equipment.

B. Securely fasten nameplates using screws, bolts, or rivets centered under or on the device, unless otherwise indicated.

3.3 GROUNDING

A. Devices, including switches and receptacles, shall be grounded in accordance with NEC, Article 250, and Section 16450– Grounding.

B. Switches and associated metal plates shall be grounded through the switch mounting yoke, outlet box, and raceway system.

C. Receptacles served from an uninterruptible power supply shall be provided with an isolated grounding conductor from the serving power panelboard.

3.4 FIELD TESTING

A. Test each receptacle for polarity and ground integrity, using a standard receptacle tester.

END OF SECTION

SECTION 16441

PANELBOARDS

PART 1 -- GENERAL

1.01 SUMMARY

A. Section Includes

1. Panelboards for three-phase and single-phase feeder and branch circuit distribution.

2. The Contractor shall provide panelboards complete and operable in accordance with the Contract Documents.

1.02 REFERENCE SPECIFICATIONS, CODES, AND STANDARDS

A. Reference Specifications

01300	Submittal Procedures
16010	Electrical General Requirements

B. Reference Standards

UNDERWRITERS LABORATORIES (UL)	
UL 67	Panelboards
NATIONAL ELECTRICAL MANUFACTURERS ASSOCIATION (NEMA)	
NEMA PB1	Panelboards
NEMA PB1.1	General Instructions for Proper Installation, Operation and Maintenance of Panelboards Rated 600 V or Less
NEMA 250	Enclosures for Electrical Equipment (1000 Volts Maximum)

C. Reference Codes

NATIONAL FIRE PROTECTION ASSOCIATION (NFPA)	
NFPA 70	National Electrical Code, 2020 Edition

1.03 SUBMITTALS

A. General: Submittals shall be made in accordance with Section 01300 –Submittal Procedures and Section16010 – Electrical General Requirements.

B. Product Data

1. Manufacturer's data sheets or catalog pages clearly identifying the make, model, part number, equipment and component ratings, selected options, and selected accessories.

C. Shop Drawings

1. Breaker layout drawings with dimensions and nameplate designations
2. Component list
3. Drawings of conduit entry/exit locations
4. Assembly ratings, including:
    a. Short circuit rating
    b. Breaker interrupting ratings
    c. Voltage
    d. Continuous current
    e. Enclosure type / environmental ratings
5. Cable terminal sizes and temperature rating
6. Descriptive bulletins
7. Installation information
8. Seismic certification and equipment anchorage details

D. Site Quality Control Submittals

1. Contractor shall submit documentation of successful testing, including completed test forms.

1.04 CLOSEOUT SUBMITTALS

A. Operation and Maintenance Data

1. Contractor shall include the following operating and maintenance data for materials and products as per the requirements outlined in Division 01 and Section 16010 – Electrical General Requirements:

    a. Shop Drawings

    b. Completed test forms

    c. Manufacturer's published operation and maintenance procedures

    d. List of spare parts

B. Warranty Documentation

1. Contractor shall provide manufacturer's warranty documentation. Submit this information with the operating and maintenance data.

C. Record Documentation

1. Contractor shall include as-built panelboard directories indicating final breaker size and load information. Submit this information as printed (not handwritten) directories with the operating and maintenance data and as-built drawings.

1.05 MAINTENANCE MATERIAL SUBMITTALS

A. Spare Parts

1. Contractor shall provide spare breakers in the size and quantity indicated on the panelboard schedules (refer to Drawings).

2. Where no spares are shown on the Drawings, Contractor shall provide spare breakers in a quantity not less than 10 percent of breakers shown on schedules. Provide spare breakers installed in available slots.

3. Unless otherwise shown on the Drawings, spare breakers shall be sized 20A,1P for 120/208V or 120/240V panelboards and sized 20A,3P for 480V or 600V panelboards.

1.06 DELIVERY, STORAGE, AND HANDLING

A. Storage and Handling Requirements

1. Contractor shall handle and store the products in accordance with the manufacturer's written requirements.

PART 2 -- **PRODUCTS**

2.01 PANELBOARDS

A. Manufacturers

1. Manufacturer List

    a. Eaton

    b. Schneider Electric / Square D

    c. ABB / General Electric

    d. Siemens

    e. Approved equal

2. Single Manufacturer

    a. To achieve standardization of appearance, operation, maintenance, spare parts, and manufacturer's services, all panelboards provided shall be the product of one manufacturer.

B. Materials

1. Ratings

    a. Voltage Ratings:

        1) 3-Phase, 3-Wire: 480V

        2) 1-Phase, 3-Wire: 120/240V

    b. Continuous Current Rating:

        1) As indicated on schedules (see drawings), not less than 100A.

        2) Neutral bus shall have the same ampere rating as the main bus.

    c. Short Circuit Ratings:

        1) Series ratings are not acceptable.

        2) 65KAIC rated

2. Enclosures

    a. Type:

        1) Panelboards to be installed in any non-hazardous locations shall be rated NEMA Type 4X stainless steel.

        2) Panelboards to be installed in hazardous locations shall be rated suitable for the hazardous area classification.

b. Features:

1) Hinged doors with combination catch and hatch.

2) Lockable. Key all panelboard locks alike and supply two keys per panel.

3) Panelboards shall be arranged such that when the hinged door is open no energized parts are exposed. All other parts shall be accessible only by removal of a grounded cover plate.

4) Panelboards shall have the necessary barriers, supports, and liberal wiring gutters. Trim screws shall be stainless steel.

5) Spaces: Stamp out spaces and install removable fillers where breaker spaces are indicated on schedules.

3. Bus Bars

a. Tin-plated copper.

b. Suitable for bolt-on breakers.

4. Circuit Breakers

a. Bolt-on type with solderless lug load connections. Plug-in circuit breakers will not be acceptable.

b. Thermal magnetic type with “ON”, “OFF” and “TRIPPED” positions. Common trip for 2 and 3 pole units. Single pole breakers with handle ties are not acceptable.

c. Single, 2- and 3-pole as indicated on schedules.

d. Ampere ratings as indicated on schedules.

e. Ground Fault Circuit Interrupters (GFCI): Shall provide 5mA ground fault sensitivity in addition to overcurrent protection of the amperage rating indicated on schedules. Wire each GFCI breaker with a separate neutral conductor wired through the interrupter to the ground bus.

f. Branch circuit breakers shall be interchangeable and capable of being operated in any position as well as being removable from the front of the panelboard without disturbing adjacent units.

g. Circuit breakers shall be compatible with clamp-on lockout devices.

C. Assembly

1. Factory Assembly

a. Panelboards shall be fully assembled in the factory.

2. Equipment Identification

a. Provide equipment identification in accordance with Section 16010 – Electrical General Requirements and Division 01.

b. Nameplate for each panelboard shall be as indicated on schedule.

2.02 ACCESSORIES

A. Lockout Devices

1. Provide clamp-on lockout devices compatible with circuit breakers in the following quantities:

a. Single-pole type: Provide 1 lockout device for every 12 circuit breakers.

b. 2-pole type: Provide 1 lockout device for every 6 circuit breakers.

c. 3-pole type: Provide 1 lockout device for every 3 circuit breakers.

2. Lockout devices shall be padlockable.

B. Circuit Directory

1. Circuit directory shall be located on the inside of the front door and shall be laminated.

2. Provide typewritten directory describing the load and its location for each circuit.

C. Surge Protection Device (SPD)

1. Provide integral SPD in all panelboards.

2.03 SOURCE QUALITY CONTROL

A. Tests and Inspections

1. Panelboards shall be tested and inspected prior to shipment in accordance with manufacturer's standard testing procedures.

PART 3 -- **EXECUTION**

3.01 GENERAL

A. The Work shall be installed as indicated in Section 16010 – Electrical General Requirements, and as described herein.

3.02 INSTALLATION

A. General

1. Ensure the equipment is properly installed to provide satisfactory service.

B. Location

1. Locate panelboards as indicated on the Drawings.

2. Ensure sufficient working clearance is provided around panelboards.

C. Mounting

1. Mount securely, plumb, true and square to adjoining surface. Where located in wet or damp areas, mount the panelboard with ½-in 12 mm space (or larger where required by Code) between the wall and the back of the panelboard.

2. Mount panelboards to height specified in Section 16010 – Electrical General Requirements.

D. Electrical

1. All branch circuit cables shall be bottom entry.

2. Connect loads to circuits.

3. For panelboards with neutrals, connect neutral conductor from source to common neutral bus, and from neutral bus to branch circuit and feeder neutrals. Do not mix neutral and ground connections on the same bus.

4. Connect ground bus and connect equipment grounding conductors to the ground bus.

3.03 SITE QUALITY CONTROL

A. Site Tests and Inspections

1. Complete testing and document results in accordance with Section 16010 – Electrical General Requirements, and the supplementary requirements stated herein.

2. Arrange for proper authorities to witness testing and inspect installation in a manner that avoids duplication of tests.

3. Obtain certificates of approval/acceptance in compliance with rules and regulations of authorities having jurisdiction.

B. Non-Conforming Work

1. Correct all non-conforming work.

2. Re-test and obtain re-inspection.

3.04 SYSTEM STARTUP

A. Manufacturer's Recommendations

1. Prior to starting, obtain and review manufacturer's installation, operation and starting instructions.

3.05 ADJUSTING

A. Load Balancing

1. Measure load balance on all panelboards with normal loads (lighting included) operating. Adjust branch circuit connections as required to obtain best balance of current between phases and record changes.

2. If load unbalance exceeds 15 percent, reconnect circuits to balance loads. Revise panelboard directories and wiring accordingly.

3. Submit, at completion of the Work, a report listing phase and neutral currents on panelboards operating under normal loads. State hour and date on which each load was measured and include voltage at time of test.

3.06 CLEANING

A. Prior to testing ensure all components are cleaned and free of dust.

B. After testing, protect components from dust and construction activities.

END OF SECTION

SECTION 16450

GROUNDING

PART 1 GENERAL

1.1 SCOPE OF WORK

A. The Contractor shall install, ready for use, the grounding system as specified herein. This document describes the function of the grounding system and particular components, but does not necessarily describe all necessary devices. All components and devices shall be furnished and installed as required to provide a complete grounding system for accomplishing the functions and meeting the performance set forth hereinafter at no additional cost to the Owner.

B. Furnish all required labor, materials, project equipment, tools, construction equipment, safety equipment, transportation, test equipment, incidentals, and services to provide a complete grounding system as shown on the Drawings or included in these Specifications.

C. The grounding system scope of work includes:

1. Provide and install miscellaneous trenching, grounding system wiring, and associated hardware.

2. Related work specified in Division 16.

1.2 SUBMITTALS AND DRAWINGS

A. Submittals and Drawings

1. Provide Submittals and Drawings as specified in Section 01300 for all grounding system components.

PART 2 MATERIALS

2.1 SERVICE GROUNDING

A. The ground ring shall consist of bare wire laid in a grid as detailed on the Contract E-Series Drawings. Bond ring to building steel frames and to metal water pipe within 5 feet of pipe entrance to building when available.

B. Network ground bond wires shall be connected from the UFFER ground to locations shown on Contract Drawings. The network ground bonding wires shall be bare copper sized as shown on Contract Drawings.

C. The system neutral shall be connected to the system's grounding conductor at only a single point in the system. This connection shall be made by a removable bonding jumper sized in accordance with the applicable provisions of the National Electrical Code. The grounding of the system neutral shall be in the enclosure that houses the service entrance main breaker.

D. Ground grid and bond wires shall be AWG bare copper as manufactured by Southwire or approve equal. Ground grid and bond wires shall be sized as shown on the Plans or in accordance with NEC Table 250.66, whichever is greater.

E. All grid and bond wire connections shall be made with U.L. approved material and methods. Ground clamps and connectors shall be made of cast bronze.

2.2 RACEWAY, EQUIPMENT AND ENCLOSURE GROUNDING

A. All raceway systems, supports, enclosures, panels, motor frames, and equipment housings shall be permanently and effectively grounded.

B. Ground clamps shall be bolt-on cast bronze type as manufactured by ILSCO type AGC, O-Z Gedney type GRC, or approved equal.

C. Grounding conductors shall be sized as shown on the Plans or in accordance with NEC Table 250.122, whichever is greater.

D. Bonding wires shall be installed on ends all metallic conduits with grounding bushings, expansion joints, and for continuity of raceways transitions. Bonding wires shall be solid bare copper sized and installed per NEC 250.102. Bonding wires at endpoints shall be connected to enclosure ground bus or equipment grounding lug. No aluminum fittings, bushings and lugs shall be used.

E. All equipment and devices shall be grounded in a manner that satisfies the requirements of the National Electrical Code.

F. One side of neutral of the secondary on all transformers shall be grounded to the ground bus or ground bond wire.

G. All receptacles shall have their grounding contact connected to a grounding conductor.

H. Branch circuit grounding conductors for receptacles or other electrical loads shall be arranged such that the removal of a lighting fixture, receptacle, or other load does not interrupt the ground continuity to any other part of the circuit.

I. All metallic light fixture enclosures and ballasts shall be grounded.

J. Attachment of the grounding conductor to equipment or enclosures shall be by connectors specifically provided for grounding. Mounting, support, or bracing bolts shall not be used as an attachment point for ground conductors.

K. The negative side of all DC power supplies shall be grounded.

L. Each ground bus shall be copper. Screw type fasteners shall be provided on all ground buses for connection of grounding conductors. Ground bus shall be a Challenger GB Series, ILSCO CAN Series, or approved equal.

2.3 ENCLOSURE GROUND BUS

A. Each electrical, control and instrumentation enclosure shall be provided with a copper grounding bus bar, mounted on the inside of the enclosure. The grounding bar shall be mounted on non-insulated standoffs so that a good electrical connection is made between the ground bar and the cabinet through the mounting.

B. The bus bar shall be sized to meet the panel grounding requirements of NEC, and for connection of a minimum of 10 groundings conductors.

C. Each ground bus shall be copper and UL recognized. Screw type fasteners shall be provided on all ground buses for connection of grounding conductors. Ground bus shall have a minimum of 10 taps, and be rated for copper conductors. Ground bus shall be an ILSCO CAN Series, or approved equal.

D. Aluminum ground bus and lugs are not acceptable.

2.4 GROUND RODS

A. The ground rod shall consist of not less than 10 continuous feet of 3/4 inch copper coated electroplated high grade carbon steel. The ground rod shall be a NEHRING type NCC 3410, or approved equal. The ground rod shall extend up for visible connection of a UL approved "ground clamp" to the ground bus.

B. Provide 14 inch diameter, 9-inch nominal throat, concrete ground rod boxes, minimum 12 inches deep, with a cast-iron traffic cover embossed or engraved "GROUND." Ground rod boxes to be as manufactured by BES Concrete Products or approve equal.

PART 3 EXECUTION

3.1 WORKMANSHIP

A. All work in this Section shall conform to the codes and standards specified in Section 16010 - Electrical.

B. The Supplier shall employ personnel that are skilled and experienced in the installation grounding system, accessories, and assemblies. All installation labor shall be performed by qualified personnel who have had experience on similar projects. Provide first class workmanship for all installations.

C. Ensure that all equipment and materials fit properly in their installations.

D. The Contractor shall perform any required work to correct that in the opinion of the Engineer are improper installations at no additional expense to the Owner.

E. All grounding system components installed by the Contractor shall be in accordance with the Drawings, NEC, and the manufacturer's recommendations and instructions.

3.2 INSTALLATION

A. System:

1. Install all products per Electrical 16010 – Installation.
2. Ground rods that are unable to be driven vertically into the earth shall be installed per NEC 250.53(G) at a 45 degree angle or buried 30 inches below grade.
3. Install additional ground rods as required to meet NEC 250.53.
4. Provide a separate grounding conductor in each raceway, securely grounded to equipment at each end of raceway.
5. Bond metal piping and building structure metal frames to grounding electrode per NEC.
6. Contractor shall not conceal or cover any ground connections until the Engineer or Owner has established that every grounding connection conforms to the Contract Drawings and Specifications and has given the Contractor written confirmation.

7. Grounding details shown on plans are minimum. If additional equipment, such as ground rods, clamps, conductors, etc., is required per NEC, Title 24, CAC, furnish and install same without additional cost to Owner.

B. Connections:

1. Use U.L. approved ground clamps specifically designed for grounding purposes. Strap metal is not acceptable for grounding or bonding.

2. Exposed connections to ground buses, raceways, and small pipes shall be made by means of U.L. approved grounding clamps. Exposed connections between different metals shall be sealed with No-Oxide Paint Grade A, or approved equal.

3. All buried, ground rod, large pipe, and steel plate or frame ground bond connections shall be made by welding process equal to Cadweld.

C. Electrical Equipment Grounding:

1. Metal conduits shall be bonded together to the enclosure ground bus.

2. Lightning arresters or suppressors shall be directly connected to the ground system using copper conductors sized per manufacturer's literature.

3. Transformer secondary neutrals shall be directly connected to the ground system using copper conductors sized as per NEC.

4. All motors shall be grounded by bonding the grounding conductor within the raceway to the motor frame. Motors as shown on Electrical Plans shall also have a supplemental grounding conductor bonded to the ground grid in the immediate area of the motor.

5. Each enclosure containing metallic components shall be grounded to the ground grid per NEC 250.4(A) (1) ~ (5).

6. A ground bus shall be provided in each enclosure or cabinet. It shall have provisions for connecting a minimum of ten grounding conductors. Screw type lugs shall be provided for connection of grounding conductors. All grounding conductors shall be sized as shown on Contract Drawings or in accordance with NEC Table 250.122, whichever is larger.

7. Each panelboard shall be equipped with a ground bus secured to the interior of the enclosure. The bus shall be equal to panelboard neutral bus amp rating and shall have adequate quantity of lugs. No more than two grounding conductors shall be installed per lug.

D. Excavation and Back Filling:

1. Trenches for all bare copper ground bond wires shall be excavated to a minimum depth of 30".

2. Back filling shall be done only after grounding system has been inspected. Excavation and back fill of grounding system shall conform to the requirements of the Earthwork Section of these Specifications.

3. At all times during the installation of the grounding system, the Contractor shall provide barricades, fences, guard rails, etc., to safeguard all personnel, including small children, from excavated trenches.

E. Cutting and Patching:

1. The Contractor shall do all cutting and patching required to install his work. Any cutting which may impair the structure shall require prior written approval by the Engineer. Cutting and patching shall be done only by skilled labor of the respective trades. All surfaces shall be restored to their original condition after cutting and patching.

3.3 WARRANTY

Provide warranty as specified in Electrical Section 16010 – Warranty.

END OF SECTION

APPENDIX A

Final Geotechnical Report, Union Mine WWTP Headworks Improvements Project, by Crawford & Associates, dated October 2023.

FINAL GEOTECHNICAL REPORT

Union Mine WWTP
Headwork Improvements Project
El Dorado County, California

Prepared by:

Crawford & Associates, Inc.
4701 Freeport Boulevard
Sacramento, CA 95822

October 11, 2023

Prepared for:

Stantec

Stantec Consulting Services Inc.
2250 Douglas Blvd., Suite 260
Roseville, CA 95661

Crawford & Associates, Inc.
Geotechnical Engineering, Design and Construction Services
Sacramento | Modesto | Pleasanton | Rocklin | Ukiah

Corporate Office: 4701 Freeport Boulevard, Sacramento, CA 95822
Modesto: 1405 8th Street, Modesto, CA 95354
Pleasanton: 6200 Stoneridge Mall Road, Suite 330, Pleasanton, CA 94588
Seattle: 1448 NW Market Street, Suite 500, Seattle, WA 98107
Ukiah: 100 North Pine Street, Ukiah, CA 95482

October 11, 2023
Crawford File No. 23-933.1

Beth Cohen, P.E.
Stantec Consulting Services Inc.
2250 Douglas Blvd., Suite 260
Roseville, CA 95661

Subject: **Final Geotechnical Report**
Union Mine WWTP
Headwork Improvement Project
El Dorado County, California

Crawford & Associates, Inc. (Crawford) prepared this Final Geotechnical Report for the Union Mine WWTP Project in El Dorado County, California. Crawford prepared this report in accordance with our June 8, 2023 agreement and based on Stantec Consultants Inc. (Stantec) 60% project plans, dated June 23, 2023. This report updates and supersedes our Draft Geotechnical Report, dated August 4, 2023.

Thank you for the opportunity to be part of your design team. Please call if you have questions or require additional information.

Sincerely,

Crawford & Associates, Inc.,

Keiko Lewis, PE
Senior Engineer

Reviewed by:

W. Eric Nichols, PE, CEG
Principal







TABLE OF CONTENTS

1 INTRODUCTION 1
1.1 PURPOSE 1
1.2 GEOTECHNICAL SERVICES 1
2 SITE AND PROJECT DESCRIPTION 1
3 FIELD EXPLORATION 2
4 GEOTECHNICAL CONDITIONS 2
4.1 SITE GEOLOGY AND FAULTING 2
4.2 SUBSURFACE CONDITIONS 3
4.3 GROUNDWATER 3
5 LABORATORY TESTING 3
6 CORROSION EVALUATION 3
7 SEISMIC INFORMATION 4
7.1 SURFACE FAULT RUPTURE 4
7.2 SEISMIC DESIGN PARAMETERS 4
7.3 LIQUEFACTION POTENTIAL 5
7.4 SEISMICALLY INDUCED SETTLEMENT 5
8 CONCLUSIONS AND RECOMMENDATIONS 5
8.1 HEADWORKS STRUCTURE 6
8.2 GRIT REMOVAL SYSTEM 6
8.3 POLE FOUNDATIONS 7
8.4 LATERAL EARTH PRESSURES 7
8.5 GRADING 8
8.5.1 ORIGINAL GROUND & SUBGRADE PREPARATION 8
8.5.2 FILL PLACEMENT & COMPACTION 8
8.5.3 EXCAVATABILITY/RIPPABILITY 9
8.6 UTILITIES 9
8.7 CONSTRUCTION CONSIDERATIONS 9
8.7.1 SHORING 9
8.7.2 DEWATERING 9
8.7.3 EXISTING STRUCTURES AND UTILITIES 9
8.7.4 POLE FOUNDATIONS 10
9 RISK MANAGEMENT 10
10 LIMITATIONS 11

FIGURES

Figure 1: Vicinity Map
Figure 2: Exploration Map
Figure 3: Geologic Map
Figure 4: Fault Activity Map

APPENDIX A

Boring Legend
Boring Logs

APPENDIX B

Laboratory Test Results

APPENDIX C

El Dorado County Trench Detail

1 INTRODUCTION

1.1 PURPOSE

Crawford & Associates, Inc. (Crawford), prepared this Final Geotechnical Report for the Union Mine WWTP Headwork Improvement project in El Dorado County, California. We prepared this report to provide geotechnical data, conclusions, and recommendations for the project.

This report updates and supersedes our Draft Geotechnical Report, dated August 4, 2023. Information and comments on that study are incorporated herein, as appropriate.

1.2 GEOTECHNICAL SERVICES

To prepare this report Crawford:

- discussed the project with Beth Cohen, P.E. with Stantec;
- reviewed published geologic maps and literature pertaining to the site;
- reviewed 60% project plans prepared by Stantec, dated September 7, 2023;
- reviewed a site topographic survey provided by Stantec;
- drilled, logged, and sampled two exploratory borings within the headwork improvements to a maximum depth of about 10.2 feet (ft) below the ground surface (bgs);
- completed laboratory testing on soil/rock samples obtained during the subsurface exploration;
- performed engineering evaluation and analysis; and
- developed conclusions and recommendations based on the data and test results.

Limitations of this study are discussed in the final section of this report.

2 SITE AND PROJECT DESCRIPTION

The project site is located in the southeastern area of El Dorado County approximately 3 miles south of the town of El Dorado, California (Figure 1). The existing Union Mine Wastewater Treatment Facility (Union Mine WWTP) currently processes raw sewage from the western portions of the County. Site coordinates are approximately latitude 38.6465° N and longitude 120.8273° W.

The existing ground surface in the vicinity of the proposed improvements was relatively level at the time of our site investigation. Existing nearby structures consisted of an aerobic digester (No. 1), odor control, blower building, and effluent storage tank (No. 2). Underground utilities present near the proposed improvements include a 2-inch air line running along the east side of the aerobic digester and a 10-inch FRP line running between the solids dewatering building to the odor control. No overhead utility lines were present near the vicinity of the proposed improvements. Martinez Creek lies to the east-northeast of the Union Mine WWTP.

We understand the project will include construction of a conventional headworks structure consisting of a partially buried screening channel and an at-grade grit removal system to improve the treatment process within the WWTP. New structure design is also understood to target about

one-half inch of permissible differential settlement. The project will also include site lighting at the south end of the headworks structure. Light standard type/details have not been defined.

Based on 60% Submittal Plans provided by Stantec the details of the headworks and grit removal system structures are as follows:

Facility	Approximate Design Subgrade Depth (feet)	Foundation Type	Footprint Dimensions (feet)	Bottom of Mat Elevation (feet)
Headworks Structure	7	Mat	16'-6" x 34'-9"	1157.0
Grit Removal System	At-Grade	Slab	16 x 34	1162.5

3 FIELD EXPLORATION

Crawford retained Geo-Ex Subsurface Exploration (Geo-Ex) to drill and sample two borings (A-23-001 and A-23-002) at the Union Mine WWTP to a maximum depth of 10 ft bgs on July 5, 2023. Geo-Ex used a CME 75 truck drill rig to complete the borings using 4-inch solid-stem augers.

Soil samples were recovered by means of a 2.0-inch O.D. “Standard Penetration” (SPT) split-spoon sampler without liners and a 3.0-inch O.D. “Modified California” split-spoon sampler with liners. Both samplers were advanced with standard 350 ft-lb striking force using an automatic hammer. An energy hammer analysis was not performed specific to this project/site, but a recent calibration test reported by Geo-Ex indicates an efficiency of 82%. Sampler penetration resistance was recorded to provide a field measure of relative densities and can be correlated to soils strength and bearing characteristics. The field-recorded (uncorrected) blow counts are shown on the soil logs attached in Appendix I.

Crawford logged the exploratory borings consistent with the Unified Soil Classification System (USCS) and the Caltrans 2022 Logging Manual. Selected portions of recovered soil drive samples were retained in sealed containers for laboratory testing and reference. Additionally, bulk soil samples were retained in sealed bags for laboratory testing and reference. At completion, exploratory borings were backfilled with cement grout and capped with dyed black concrete. The locations of the exploratory borings are shown on Figure 2.

4 GEOTECHNICAL CONDITIONS

4.1 SITE GEOLOGY AND FAULTING

Published geologic mapping[1] shows surface materials at the site as the Jurassic-age Mariposa Formation Metamorphic Rock that generally consists of slate, graywacke, and conglomerate. No faults, landslides, or other geologic hazards are mapped at the site. Nearby faults and associated

[1] Wagner, Jennings, Bedrossian and Bortugno, 1981, “Geologic Map of the Sacramento Quadrangle”, California; State of California, scale 1:250,000.

potential ground motion at the site are discussed in the site seismic conditions section of this report.

4.2 SUBSURFACE CONDITIONS

The materials encountered in the exploratory borings completed for this study are considered consistent with the published mapping. We divide the earth materials encountered in the borings into two general units (Unit 1 Soil and Unit 2 Rock), as summarized below. Refer to Appendix B that includes the test boring logs for more specific soil/rock descriptions, sampling methods, laboratory test results and blow count data.

Unit 1: This soil unit was encountered in Borings A-23-001 and A-23-002 and generally consists of medium dense poorly-graded gravel with sand to a depth of about 2.5 ft (elev. 1159.5±) in A-23-001 and 1.0 ft (elev. 1161±) in A-23-002. These materials are interpreted as predominately fill for the existing gravel roadway. No asphalt concrete was encountered in the borings.

Unit 2: This rock unit was encountered below Unit 1 in Borings A-23-001 and A-23-002 to the maximum depth explored (10 ft; elev. 1152±). Unit 2 materials consist of metamorphic rock (slate) that is generally described as dark gray, fine grained, moderately soft, and intensely to moderately weathered. This unit was readily drilled with 4-inch diameter continuous flight auger until essential refusal in each boring. Sampler refusal (where blow counts are greater than 50 blows) were predominately encountered within this unit.

4.3 GROUNDWATER

At the time of the June 2023 field exploration, groundwater was not encountered within the augered borings (A-23-001 and A-23-002). According to information available from the California Department of Water Resources Water Data Library website[2], there are no wells with groundwater data located near the project site. Groundwater is not expected to impact site grading and construction, although local perched water may be encountered during the winter and spring months.

5 LABORATORY TESTING

The following laboratory tests were completed on representative soil/rock samples obtained from the exploratory borings:

- Moisture Content (ASTM D2216)
- Sulfate/Chloride Content (CTM 417/422)
- pH/Minimum Resistivity (CTM 643)

We present the laboratory tests results in Appendix B.

6 CORROSION EVALUATION

Corrosivity tests were completed on one sample obtained from Borings A-23-002. Results of the corrosivity tests are summarized in Table 1.

[2] http://www.water.ca.gov/waterdatalibrary/, accessed July 11, 2023.

Table 1: Corrosivity Test Results

Boring / Sample No.	Sample Depth Interval (ft)	Elevation (ft)	pH	Minimum Resistivity (ohm-cm)	Chloride (ppm)	Sulfate (ppm)	Corrosive?
A-23-002-1A	3.5 – 4.0	1,154.5 – 1,154.0	3.09	3,220	3.5	81.4	Yes

Note: Caltrans[3] currently defines a corrosive environment as an area where the soil has either a chloride concentration of 500 ppm or greater, a sulfate concentration of 1500 ppm or greater, or has a pH of 5.5 or less. With the exception of MSE wall design, Caltrans does not include minimum resistivity as a parameter to define a corrosive area for structures and soil and water are not required to be tested for chlorides and sulfates if the minimum resistivity is greater than 1,100 ohm-cm. (Caltrans Corrosion Guidelines Version 3.2, May 2021).

Based on the corrosivity test results and current Caltrans guidelines, the site is considered corrosive to structural concrete/steel foundation elements due to pH being less than 5.5.

These tests are only an indicator of soil corrosivity. Section 12 of Caltrans' guidelines provides information regarding corrosion mitigation measures for structural elements and lists additional Caltrans guideline documents regarding corrosion mitigation. The designer could also consult with a corrosion engineer if the test result values are consider significant.

7 SEISMIC INFORMATION

7.1 SURFACE FAULT RUPTURE

No active fault traces are shown on published mapping to cross the site and the site is not within or adjacent to an Alquist–Priolo Earthquake Fault Zone for fault rupture hazard. No evidence of surface fault rupture was observed from our geologic reconnaissance at the project site. On these bases, the potential for surface fault rupture within the project limits is considered negligible and not a design consideration.

7.2 SEISMIC DESIGN PARAMETERS

Based on our exploratory borings, we provide the ASCE 7-16 standards – California Building Code (CBC) design parameters below. We determined the values using an approximate latitude of 38.6465°N and longitude of 120.8273°W with the ASCE 7 Hazard tool[4] developed by the American Society of Civil Engineers, which interpolates values (S_S, S_1, T_L, and PGA) from the ASCE 7-16 maps using the site location, and Chapter 11 of ASCE 7-16 with Supplement 1, 2 and 3. Since this is a Site Class C, no site-specific analysis is required.

[3] Caltrans, Corrosion Guidelines Version 3.2, May 2021.
[4] https://asce7hazardtool.online/ , accessed August 2, 2023.

Table 2: Seismic Design Parameters

Site Class	C
Risk Category	I/II/III
S_S – Acceleration Parameter	0.409
S_1 – Acceleration Parameter	0.201
F_a – Site Coefficient	1.3
F_v – Site Coefficient	1.5
S_{MS} – Adjusted MCE[1] Spectral Response Acceleration Parameter	0.532
S_{M1} – Adjusted MCE[1] Spectral Response Acceleration Parameter	0.302
S_{DS} – Design Spectral Acceleration Parameter	0.355
S_{D1} – Design Spectral Acceleration Parameter	0.201
T_L – Long-Period Transition Period[2]	12 sec
Peak Ground Acceleration (PGA)	0.174
Site Modified Peak Ground Acceleration (PGA_M)	0.213

[1]Risk Targeted Maximum Considered Earthquake
[2]Figure 22-14, ASCE 7-16

7.3 LIQUEFACTION POTENTIAL

Liquefaction is a secondary effect associated with seismic loading. It can occur when saturated, loose to medium dense, granular soils (generally within 50 feet of the surface), or specifically-defined cohesive soils, are subjected to ground shaking. Loose granular soils in the range of soil texture and consistency potentially susceptible to liquefaction are locally present at this site. However, based on the shallow depth to bedrock and lack of groundwater encountered in our borings at this site, we consider the potential for detrimental liquefaction to adversely affect the proposed structure to be low and is not a design consideration.

7.4 SEISMICALLY INDUCED SETTLEMENT

During a seismic event, ground shaking can cause densification of granular soil above the water table that can result in settlement of the ground surface. For similar reasons as indicated above, we would not expect significant densification of site soils and consider the potential for detrimental seismic settlement at the site to be low is not a design consideration.

8 CONCLUSIONS AND RECOMMENDATIONS

We conclude that the site conditions are suitable for construction of the proposed improvements provided the recommendations presented below are included in design and construction. The risk of fault rupture hazard is considered low. No over-riding geologic hazards (e.g., active faults, landslides, severe settlement/erosion, flooding, soft soils, subsidence, etc.) were identified by either published geologic mapping or site reconnaissance performed for this study. No evidence of faulting was observed at the site and potential for ground rupture due to faulting at the site is considered very low. Key geotechnical considerations associated with design and construction of this project include the construction of the headworks near existing structures and utilities, presence of shallow weathered bedrock, varying soil/rock transition depths and bedrock rippability.

8.1 HEADWORKS STRUCTURE

The headworks structure (approximately 34'-9" by 16'-6") is planned to be supported on a shallow mat foundation established approximately 7 ft below existing grade. At this level, we expect the mat foundation will bear entirely on weathered bedrock (Unit 2). Provided the mat foundation is capable of uniformly distributing the loads, an allowable bearing capacity of 5,000 psf is readily available and recommended to design the foundation. This bearing capacity value may be increased by one-third if wind and/or seismic loads are included. Provided the above allowable bearing capacity is used, we estimate total settlement less than 1 inch and differential settlement less than 1/2-inch. Settlement is expected to be almost entirely immediate.

For lateral resistance, we recommend a passive pressure as shown in Table 3 below depending on the backfill material (ignore the upper 2 ft) along the sides of the structures and a coefficient of friction of 0.45 along the bottom of the structure that is bearing on bedrock (located 1 to 2 ft below the ground surface in our exploratory borings).

Excavation of the bedrock may create an irregular foundation bottom. If needed to construct a uniform foundation bottom, the contractor may place 6 inches of compacted Class 2 Aggregate Base (per Caltrans Standard Specifications) or controlled low-strength material as a leveling course. Clean foundation excavations of debris and loose soil/rock prior to placing structural concrete or leveling course. Slope the ground surface away from the structures to direct water away from the foundations to prevent ponding.

8.2 GRIT REMOVAL SYSTEM

The grit removal system (approximately 34' by 16') will be supported on an at-grade slab foundation. Based on the boring data generated for this study, about 1 to 2.5 ft of fill (Unit 1) is present overlying bedrock (Unit 2), although the extent of fill in this area is unknown. Therefore, to mitigate the non-uniform nature of the fill and potential for differential settlement, and to provide uniform support of the slab foundation, we recommend that the existing fill (Unit 1) be entirely removed below the grit removal system, and 2 ft laterally in all directions, to expose intact bedrock (Unit 2). The excavated materials are recommended to be replaced with properly compacted soil per our Grading Recommendations below. Depending on the extent of the undocumented fill, shoring may be required to prevent damage to the adjacent aerobic digester during fill removal and backfill.

Provided the fill is replaced with properly compacted soil per the Grading Recommendation section, an allowable bearing capacity of 2,000 psf is recommended to design the foundation. This bearing capacity value may be increase by one-third if wind and/or seismic loads are included. Provided the above allowable bearing capacity is used, we estimate total settlement less than 1 inch and differential settlement less than 1/2-inch. Settlement is expected to be almost entirely immediate. The grit removal system slab should be constructed independent from the headworks structure in consideration of potential differential settlement between the two structures.

For lateral resistance, we recommend a coefficient of friction of 0.40 along the bottom of the structure that is bearing on soil. Clean foundation excavations of debris and loose soil/rock prior to placing structural concrete or leveling course. Slope the ground surface away from the structures to direct water away from the foundations to prevent ponding.

8.3 POLE FOUNDATIONS

The lateral bearing resistance for light standard pole foundations is recommended to be based on an allowable lateral earth pressure of 400 psf/ft below natural grade (Class of Material 2 on Table 1806.2 of the 2022 CBC[5]) and neglecting the upper 2 ft in non-paved areas. In accordance with Section 1806.3.4 of the CBC, the allowable lateral earth pressure may be doubled assuming isolated poles can tolerate at least a ½-inch deflection at the ground surface due to short-term lateral loading. The lateral bearing resistance may be computed following Section 1807.3.2 of the CBC assuming the foundations will be embedded against intact rock.

We recommend the use of minimum 16-inch diameter cast-in-drilled-hole (CIDH) piles penetrating into the underlying intact bedrock (Unit 2). For axial capacity, we recommend using 450 psf for allowable skin friction, ignoring the uppermost 2 ft below finished grade. The designer should neglect end bearing and the piles should be at least 4 pile diameters long.

8.4 LATERAL EARTH PRESSURES

Design below ground structures using the equivalent fluid weights (EFWs) shown in Table 4. We assume in-place native materials or compacted soil with level backfill conditions. If shoring will be used adjacent to the proposed walls during construction, we recommend using the rock values as presented below. If the excavations will be sloped back and engineered fill placed adjacent to the proposed walls, we recommend using the soil values as presented in Table 3.

Table 3: Static Equivalent Fluid Weights

Condition	Static EFW (pcf)	
	Rock	Soil
Active	31	36
At-Rest	50	56
Passive	320	220

The EFW values above were calculated based on compacted soil with an average unit weight of approximately 125 pcf and an angle of internal friction (ϕ) of 34° and rock with an average unit weight of approximately 140 pcf and an angle of internal friction (ϕ) of 40°.

For *static design*, we recommend applying the resultant of the static earth pressure at a depth of 0.33H from the base of the wall (where H equals the wall height). At-rest and active earth pressures do not include a factor of safety; the passive earth pressures have been reduced by a factor of safety of 2.0. The use of the active earth pressure assumes the wall is free to rotate at least 0.002H to mobilize the active condition. The at-rest earth pressure is recommended for walls that are restrained at the top and do not deflect or move. The passive fluid weight is only applicable if the retained earth is allowed to strain at least 0.02H.

For *seismic design*, we recommend reducing the allowable passive pressure to 315 and 218 pcf for rock and soil, respectively. For the at-rest condition, use an incremental seismic EFW of 14 pcf. Use a triangular pressure distribution with the magnitude of the resultant applied at H/3 from the base of the wall. The total seismic load is equal to the resultant of the incremental seismic

[5] 2022 California Building Code, Title 24, Part 2 (Volumes 1 & 2) with January 2023 Errata

earth pressure added to the resultant of the static earth pressure. For the active condition, the seismic increase in earth pressure for the active condition can be ignored since the site PGA is less than 0.4 g.

For surcharge loads, apply an additional uniform lateral load behind the wall equivalent to the greater of 0.45-times the design surcharge pressure, or 0.45-times a minimum surcharge of 240 psf in soil or 0.33-times a minimum surcharge of 240 psf in rock.

8.5 GRADING

Where referenced in this report, ASTM D1557 test methods are recommended to be used to determine relative compaction and optimum moisture. Compacted soils are considered unsuitable (even if it meets relative compaction requirements) if it unstable and pumps or flexes under construction equipment loads, as determined by Crawford.

8.5.1 ORIGINAL GROUND & SUBGRADE PREPARATION

Prior to site grading, demolish and clear the site to remove all existing fill, structures, slabs, foundations, vegetation, debris, abandoned utilities, soft or unstable areas or other deleterious materials.

All materials should be excavated to expose intact bedrock and the surface should be trimmed to receive fill. The bottom of the headworks structure is anticipated to be supported entirely in/on Unit 2 bedrock material.

The surface exposed by excavation is recommended to be reviewed by a geologist or engineer from Crawford to confirm adequate depth and identify loose/soft or unsuitable materials to be overexcavated before placement of fill.

8.5.2 FILL PLACEMENT & COMPACTION

The on-site soil/rock may be re-used as fill, provided it is properly processed and compacted. Fill should be free of debris, large roots (greater than 2-inches in diameter), and concentrations of organic material.
Import soil should meet the following criteria:

- Contain no visual concentration of organics, debris, or deleterious materials
- 100% passing the 3-inch sieve
- 35% to 100% passing the No. 4 sieve
- 10-45% passing the No. 200 sieve
- Plasticity Index<15
- Non-expansive fine-grained material

Place fill in maximum 8-inch-thick loose lifts, moisture condition to within 2% above optimum and compact to a minimum of 95% relative compaction based on ASTM D1557 test procedure. Should large rock be utilized in the fill, it should be placed in the deep portions of the fill and in such a manner as to prevent nesting and allow compaction of the fine-grained material between the rock.

Bench new fill into the temporary cut slopes a minimum horizontal distance of 1.5-ft for every foot of fill placed, or as necessary to remove loose material and provide proper compaction along the zone of transition.

8.5.3 EXCAVATABILITY/RIPPABILITY

Based on the boring data generated for this study, excavation of Unit 1 soils and Unit 2 bedrock to the planned bottom of mat foundation are expected to be achievable with typical heavy-duty excavation equipment without blasting, although some areas may encounter less-weathered rock requiring the use of air-tools and/or heavy ripping equipment. Oversize rock requiring special handling/disposal (i.e., in excess of 24-inch dimension) is not generally anticipated.

8.6 UTILITIES

We expect multiple utilities to be installed as part of this improvement project. Similar to the structural improvements at the site, the utilities are expected to be located in areas with varying depths of soil to rock transitions. We recommend the use of flexible connections where possible to reduce the amount of differential vertical settlement and horizontal movement between structure and utility connections.

Backfill the utilities per manufacture specifications and El Dorado County's Standard Trench Detail within the pipe zone. The excavated (native) material may not be suitable for use as backfill material due to the presence of weathered and fractured rock unless processed to meet backfill specifications. El Dorado County's Standard Trench Detail is attached as Appendix C.

8.7 CONSTRUCTION CONSIDERATIONS

8.7.1 SHORING

Temporary slopes are expected to be required for foundation construction. Tentatively, we anticipate Soil Type C for Unit 1 and Soil Type B for Unit 2. The contractor is responsible for the design and construction of temporary excavation sloping and shoring in accordance with Cal OSHA Standards that includes: the assessment of the actual field conditions at the time of construction by a competent person; interpretation/classification/verification of the Cal OSHA soil/rock type for the design of temporary excavations; and to protect personnel, existing structures, utilities, and other facilities during construction.

The headworks structure and existing Aerobic Digester No. 1 are spaced approximately 5 ft apart and the grit removal system and existing Aerobic Digester No. 1 are spaced approximately 2 ft apart. These space limitations are expected to require special consideration for/during construction. The contractor should consider space limitations and work flow prior to bidding the project.

Runoff water should not be allowed to enter the site/excavations during construction.

8.7.2 DEWATERING

Based on the data generated for this study, dewatering groundwater should not be necessary; however, surface runoff and/or perched water over bedrock may require sump pumps to evacuate nuisance water in excavations.

8.7.3 EXISTING STRUCTURES AND UTILITIES

Based on site observations and location of the proposed improvement, there is no apparent conflict with existing structures, foundation elements, and utilities. Where present and in conflict,

remove abandoned structures/utilities and backfill per the above Grading recommendations. Existing gravel road thickness varied from 1 to 2.5 ft thick and no asphalt pavement was observed / present in the area of proposed improvements.

8.7.4 POLE FOUNDATIONS

Based on the conditions encountered during the field investigation, the contractor should expect to encounter weathered rock that may require "heavy duty" equipment specifically tooled for "hard" rock drilling. Use of temporary casing may be needed help to control caving of Unit 1 materials overlying the bedrock. If temporary casing is used, either corrugated steel or noncorrugated steel with smooth surfaces is permissible. The casing diameter is recommended be at least 8-inches greater than the CIDH pile to help prevent binding of the drilling tool. If utilized, the temporary casing is recommended to be set in a drilled hole and removed during placement of concrete.

Based on the lack of groundwater encountered in the borings, we do not expect groundwater to be encountered during CIDH installations. However, winter or spring construction, or periods during or following rain may result in higher/perched groundwater levels. Nuisance water within foundation excavations may be present and the contractor should be prepared to dewater excavations with sump pumps. The contractor is responsible for dewatering design and construction methods.

Prior to mobilization to the site, it is recommended that the contractor prepare and submit a detailed CIDH work plan for the engineer's review and approval. It is recommended that the work plan state explicitly all assumptions the contractor has made regarding earth materials and foundation construction conditions, including details of proposed equipment, tools, personnel, materials, methods and order of work.

9 RISK MANAGEMENT

Within our profession it is recognized that the risks of design, construction, and maintenance-related problems associated with civil engineering works are typically higher and result in increased overall project cost when the geotechnical engineer of record is not retained to provide supplemental services. For this project, Crawford should provide the following supplemental geotechnical services:

- Review and provide written comments on the final plans and specifications, insofar as they rely upon this report, prior to construction bidding to verify consistency with the recommendations contained herein;
- Observe the foundation excavations and installations during construction in order to confirm anticipated bearing materials and provide additional or alternate recommendations if necessary; and
- Update this report if design changes occur, 2 years or more lapse between this report and construction, and/or site conditions have changed.

Should there be significant change in the project or should soil/rock conditions different from those described in this report be encountered during construction, this office should be contacted/notified for evaluation and supplemental recommendations as necessary or appropriate.

Crawford cannot be responsible for any other parties' interpretation of our report and recommendations contained herein, as well as subsequent addendums, letters, and discussions. If others perform the construction observation, they should review this report and either accept the conclusions and recommendations herein as their own or provide alternative recommendations.

10 LIMITATIONS

The conclusions and recommendations of this study are professional opinion based upon the indicated project criteria and the limited data described herein. It is recognized there is potential for variation in subsurface conditions and modification of conclusions and recommendations might emerge from further, more detailed study. This report should be used only for the design and construction of the Union Mine WWTP Headwork Improvement Project.

As changes in appropriate standards, site conditions and technical knowledge cannot be adequately predicted; review of recommendations by this office for use after a period of two years is a condition of this report.

A review by this office of any foundation and/or grading plans and specifications or other work product insofar as they rely upon or implement the content of this report, together with the opportunity to make supplemental recommendations as indicated therefrom is considered an integral part of this study and a condition of recommendations. Subsequently defined construction observation procedures and/or agencies are an element of work, which may affect supplementary recommendations.

Should there be significant change in the project or should soil/rock conditions different from those described in this report be encountered during construction, this office should be notified for evaluation and supplemental recommendations as necessary or appropriate.

Opinions and recommendations apply to current site conditions and those reasonably foreseeable for the described development--which includes appropriate operation and maintenance thereof. They cannot apply to site changes occurring, made, or induced, of which this office is not aware and has not had opportunity to evaluate.

The scope of this study specifically excluded sampling and/or testing for, or evaluation of the occurrence and distribution of, hazardous substances. No opinion is intended regarding the presence or distribution of any hazardous substances at this or nearby sites.

FIGURES

Figure 1: Vicinity Map
Figure 2: Exploration Map
Figure 3: Geologic Map
Figure 4: Fault Activity Map

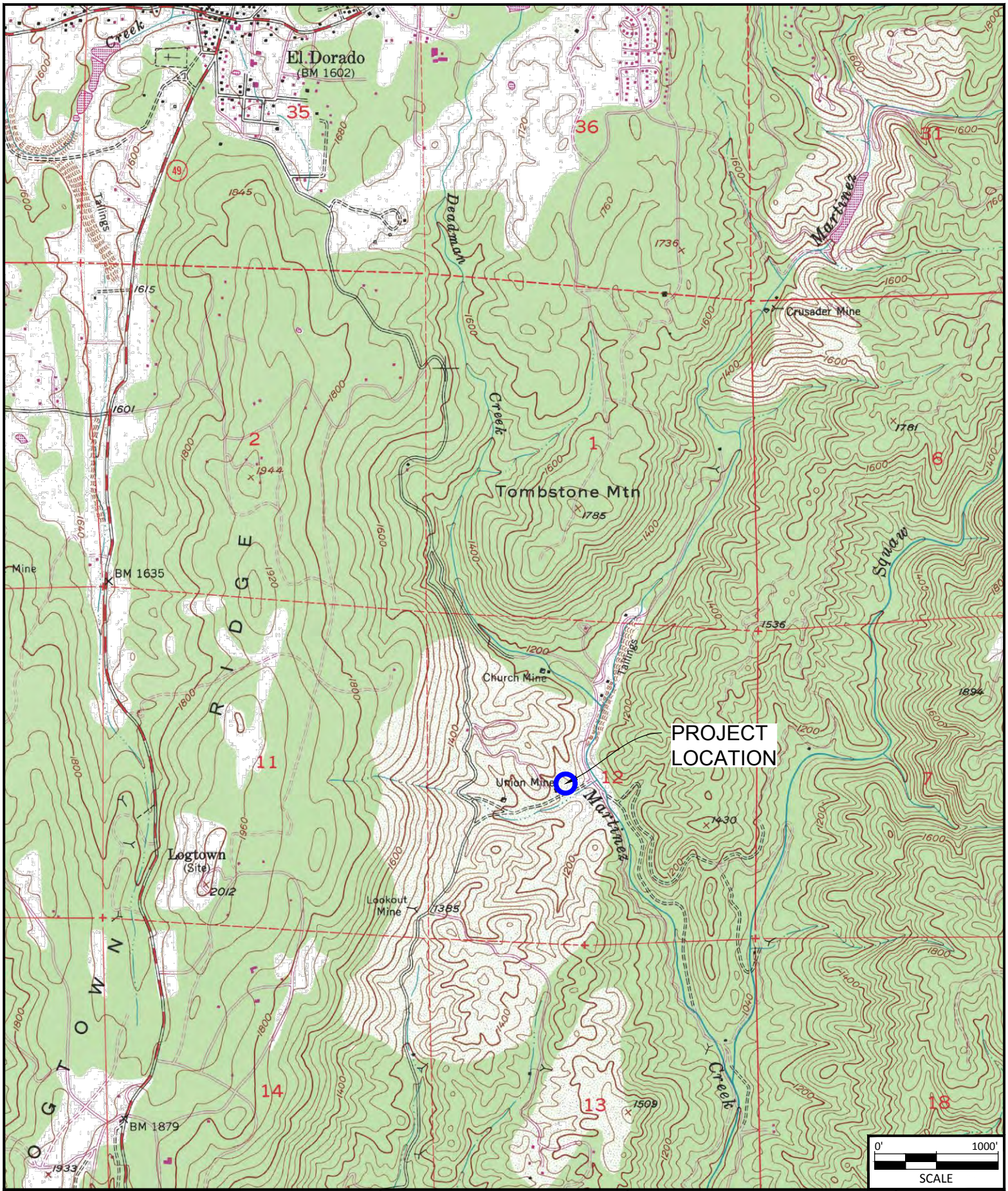

NORTH

Source:
USGS 7.5' Topographic Maps, Placerville Quadrangle, El Dorado County, California, Revised 1973, 1:24000.

Crawford & Associates, Inc.
Geotechnical Engineering, Design and Construction Services
Taber Since 1954
www.crawford-inc.com

Union Mine WWTP Improvement

El Dorado County, CA

Figure 1
Vicinity Map

Prj. No: 23-933.1
Date: 06/26/2023

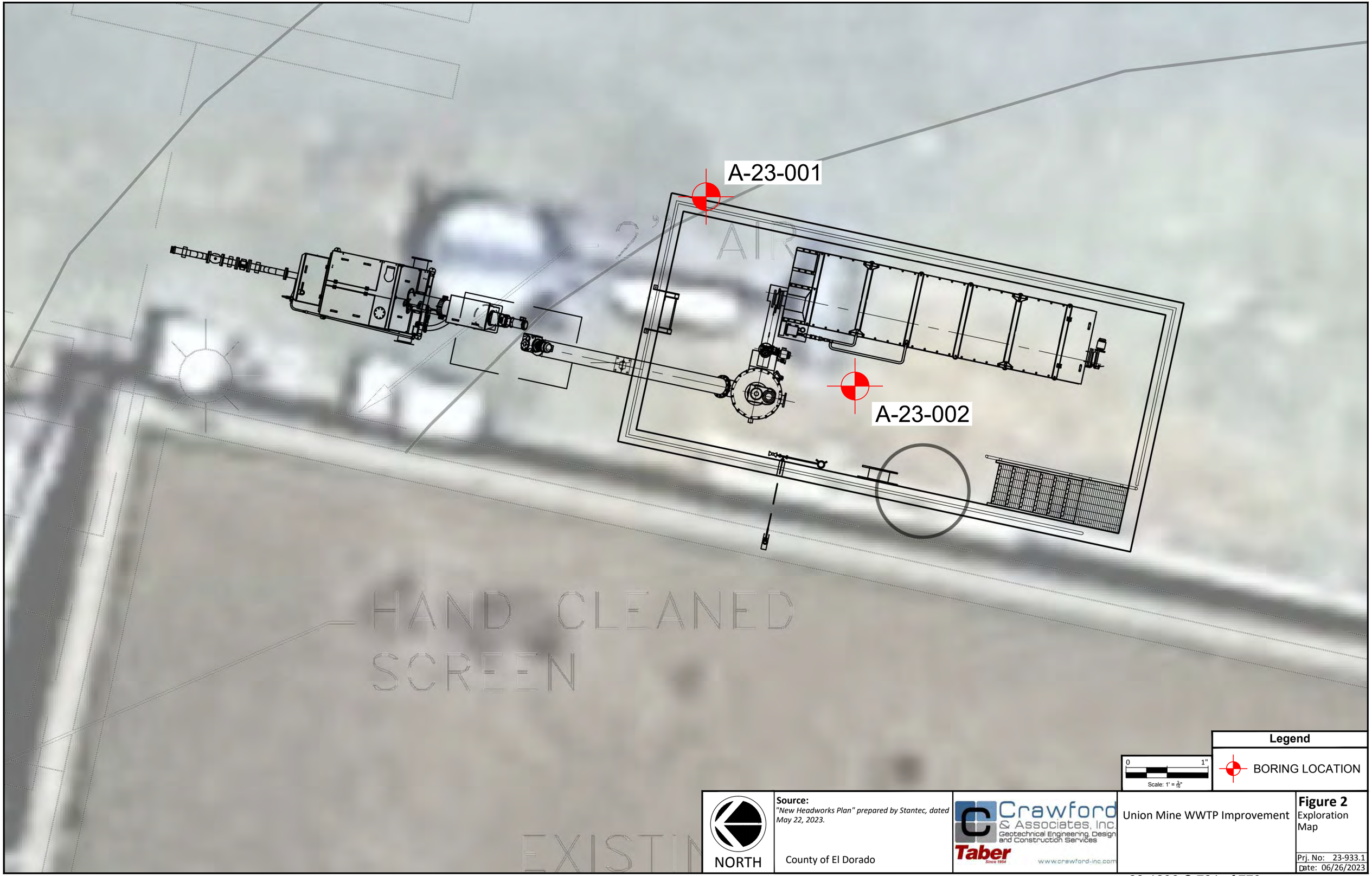

Source:
"New Headworks Plan" prepared by Stantec, dated May 22, 2023.

County of El Dorado

Crawford & Associates, Inc.
Geotechnical Engineering, Design and Construction Services
Taber Since 1954
www.crawford-inc.com

Union Mine WWTP Improvement

Figure 2
Exploration Map

Prj. No: 23-933.1
Date: 06/26/2023

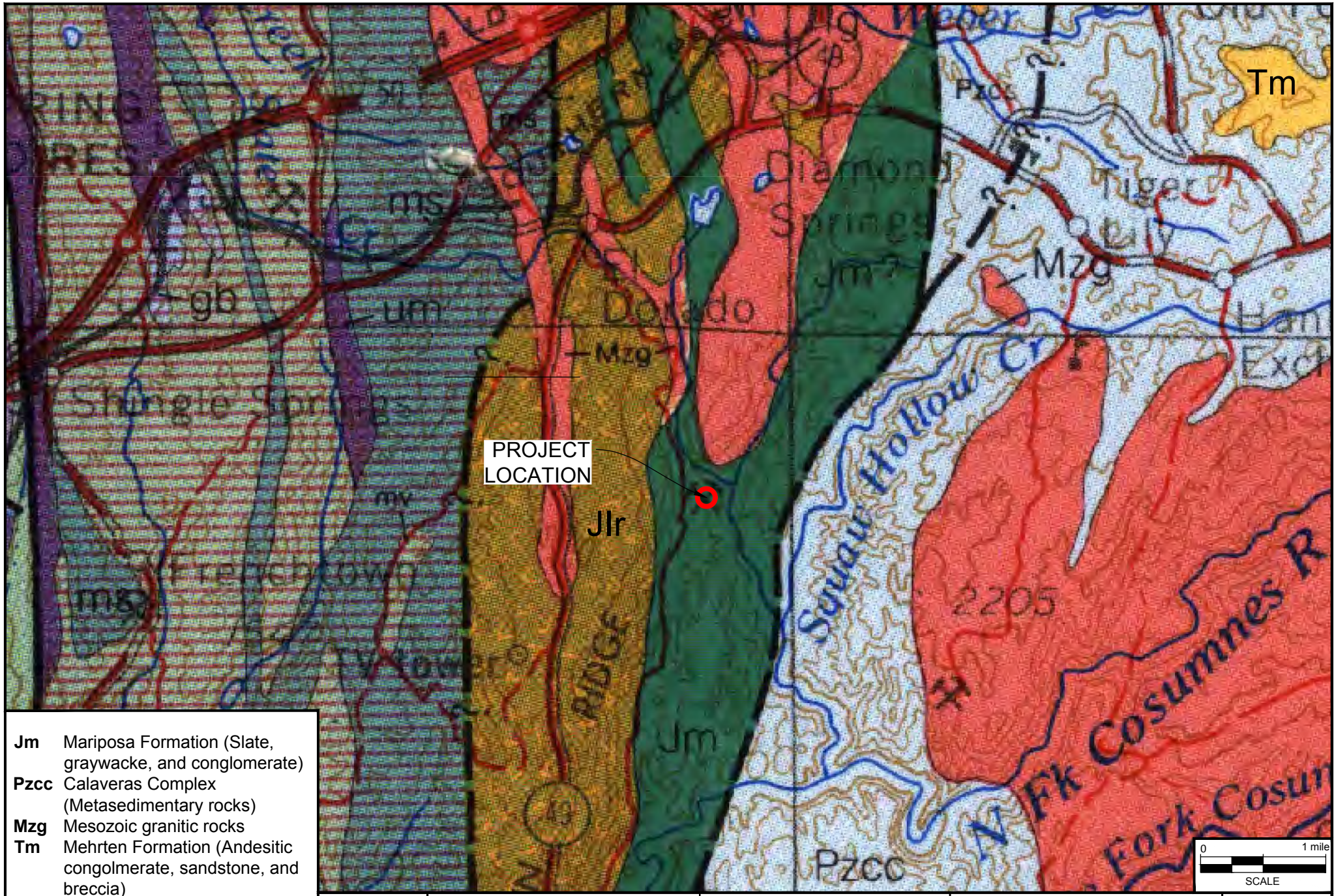

Jm	Mariposa Formation (Slate, graywacke, and conglomerate)
Pzcc	Calaveras Complex (Metasedimentary rocks)
Mzg	Mesozoic granitic rocks
Tm	Mehrten Formation (Andesitic congolmerate, sandstone, and breccia)
Jlr	Logtown Ridge Formation
um	Ultramafic rocks
mv	Metavolcanic rocks
ms	Metasedimentary rocks
gb	Gabbroic rocks

NORTH

Source:
Wagner, Jennings, Bedrossian and Bortugno; Geologic Map of the Sacramento Quadrangle, California; 1:250,000; State of California, 1981.

Crawford & Associates, Inc.
Geotechnical Engineering, Design and Construction Services
Taber Since 1954
www.crawford-inc.com

Union Mine WWTP Improvement

El Dorado County, CA

Figure 3
Geologic Map

Prj. No: 23-933.1
Date: 06/26/2023



LEGEND

Quaternary Fault (Age)

- <150 years
- <15,000 years
- <130,000 years
- <750,000 years
- <1.6 million years

Location

- Well Constrained
- Moderately Constrained
- Inferred

NORTH

Source:
Basemap: AutoCAD Civil3D Geolocation Tool, using Bing Maps

Fault Data: USGS GIS Data

Crawford & Associates, Inc.
Geotechnical Engineering, Design and Construction Services
Taber Since 1954
www.crawford-inc.com

Union Mine WWTP Improvement

El Dorado County, CA

Figure 4
Fault Map

Prj. No: 23-933.1
Date: 06/26/2023

APPENDIX A

Boring Legend
Boring Logs

GROUP SYMBOLS AND NAMES

Graphic / Symbol	Group Names
GW	Well-graded GRAVEL Well-graded GRAVEL with SAND
GP	Poorly graded GRAVEL Poorly graded GRAVEL with SAND
GW-GM	Well-graded GRAVEL with SILT Well-graded GRAVEL with SILT and SAND
GW-GC	Well-graded GRAVEL with CLAY (or SILTY CLAY) Well-graded GRAVEL with CLAY and SAND (or SILTY CLAY and SAND)
GP-GM	Poorly graded GRAVEL with SILT Poorly graded GRAVEL with SILT and SAND
GP-GC	Poorly graded GRAVEL with CLAY (or SILTY CLAY) Poorly graded GRAVEL with CLAY and SAND (or SILTY CLAY and SAND)
GM	SILTY GRAVEL SILTY GRAVEL with SAND
GC	CLAYEY GRAVEL CLAYEY GRAVEL with SAND
GC-GM	SILTY, CLAYEY GRAVEL SILTY, CLAYEY GRAVEL with SAND
SW	Well-graded SAND Well-graded SAND with GRAVEL
SP	Poorly graded SAND Poorly graded SAND with GRAVEL
SW-SM	Well-graded SAND with SILT Well-graded SAND with SILT and GRAVEL
SW-SC	Well-graded SAND with CLAY (or SILTY CLAY) Well-graded SAND with CLAY and GRAVEL (or SILTY CLAY and GRAVEL)
SP-SM	Poorly graded SAND with SILT Poorly graded SAND with SILT and GRAVEL
SP-SC	Poorly graded SAND with CLAY (or SILTY CLAY) Poorly graded SAND with CLAY and GRAVEL (or SILTY CLAY and GRAVEL)
SM	SILTY SAND SILTY SAND with GRAVEL
SC	CLAYEY SAND CLAYEY SAND with GRAVEL
SC-SM	SILTY, CLAYEY SAND SILTY, CLAYEY SAND with GRAVEL
PT	PEAT
	COBBLES COBBLES and BOULDERS BOULDERS

Graphic / Symbol	Group Names
CL	Lean CLAY Lean CLAY with SAND Lean CLAY with GRAVEL SANDY lean CLAY SANDY lean CLAY with GRAVEL GRAVELLY lean CLAY GRAVELLY lean CLAY with SAND
CL-ML	SILTY CLAY SILTY CLAY with SAND SILTY CLAY with GRAVEL SANDY SILTY CLAY SANDY SILTY CLAY with GRAVEL GRAVELLY SILTY CLAY GRAVELLY SILTY CLAY with SAND
ML	SILT SILT with SAND SILT with GRAVEL SANDY SILT SANDY SILT with GRAVEL GRAVELLY SILT GRAVELLY SILT with SAND
OL	ORGANIC lean CLAY ORGANIC lean CLAY with SAND ORGANIC lean CLAY with GRAVEL SANDY ORGANIC lean CLAY SANDY ORGANIC lean CLAY with GRAVEL GRAVELLY ORGANIC lean CLAY GRAVELLY ORGANIC lean CLAY with SAND
OL	ORGANIC SILT ORGANIC SILT with SAND ORGANIC SILT with GRAVEL SANDY ORGANIC SILT SANDY ORGANIC SILT with GRAVEL GRAVELLY ORGANIC SILT GRAVELLY ORGANIC SILT with SAND
CH	Fat CLAY Fat CLAY with SAND Fat CLAY with GRAVEL SANDY fat CLAY SANDY fat CLAY with GRAVEL GRAVELLY fat CLAY GRAVELLY fat CLAY with SAND
MH	Elastic SILT Elastic SILT with SAND Elastic SILT with GRAVEL SANDY elastic SILT SANDY elastic SILT with GRAVEL GRAVELLY elastic SILT GRAVELLY elastic SILT with SAND
OH	ORGANIC fat CLAY ORGANIC fat CLAY with SAND ORGANIC fat CLAY with GRAVEL SANDY ORGANIC fat CLAY SANDY ORGANIC fat CLAY with GRAVEL GRAVELLY ORGANIC fat CLAY GRAVELLY ORGANIC fat CLAY with SAND
OH	ORGANIC elastic SILT ORGANIC elastic SILT with SAND ORGANIC elastic SILT with GRAVEL SANDY elastic ELASTIC SILT SANDY ORGANIC elastic SILT with GRAVEL GRAVELLY ORGANIC elastic SILT GRAVELLY ORGANIC elastic SILT with SAND
OL/OH	ORGANIC SOIL ORGANIC SOIL with SAND ORGANIC SOIL with GRAVEL SANDY ORGANIC SOIL SANDY ORGANIC SOIL with GRAVEL GRAVELLY ORGANIC SOIL GRAVELLY ORGANIC SOIL with SAND

FIELD AND LABORATORY TESTS

C	Consolidation
CL	Collapse Potential
CP	Compaction Curve
CR	Corrosion, Sulfates, Chlorides
CU	Consolidated Undrained Triaxial
DR	Drained Residual Shear Strength
DS	Direct Shear
EI	Expansion Index
M	Moisture Content
OC	Organic Content
P	Permeability
PA	Particle Size Analysis
PI	Liquid Limit, Plastic Limit, Plasticity Index
PL	Point Load Index
PM	Pressure Meter
PP	Pocket Penetrometer
R	R-Value
SE	Sand Equivalent
SG	Specific Gravity
SW	Swell Potential
TV	Pocket Torvane
UC	Unconfined Compression - Soil
	Unconfined Compression - Rock
UU	Unconsolidated Undrained Triaxial
UW	Unit Weight

SAMPLER GRAPHIC SYMBOLS

- Standard Penetration Test (SPT)
- Standard California Sampler (ID 2.0 in.)
- Modified California Sampler (ID 2.5 in.)
- Shelby Tube
- Piston Sampler
- NX Rock Core
- HQ Rock Core
- Bulk Sample
- Other (see remarks)

DRILLING METHOD SYMBOLS

- Auger Drilling
- Rotary Drilling
- Dynamic Cone or Hand Driven
- Diamond Core

WATER LEVEL SYMBOLS

- First Water Level Reading (during drilling)
- Static Water Level Reading (short-term)
- Static Water Level Reading (long-term)

REFERENCE: Caltrans Soil and Rock Logging, Classification, and Presentation Manual (2010) with Errata Sheet (2015).

Crawford & Associates, Inc.
Geotechnical Engineering, Design and Construction Services

Boring Record Legend

Soil Legend

CONSISTENCY OF COHESIVE SOILS				
Descriptor	**Unconfined Compressive Strength (tsf)**	**Pocket Penetrometer (tsf)**	**Torvane (tsf)**	**Field Approximation**
Very Soft	< 0.25	< 0.25	< 0.12	Easily penetrated several inches by fist
Soft	0.25 - 0.50	0.25 - 0.50	0.12 - 0.25	Easily penetrated several inches by thumb
Medium Stiff	0.50 - 1.0	0.50 - 1.0	0.25 - 0.50	Can be penetrated several inches by thumb with moderate effort
Stiff	1.0 - 2.0	1.0 - 2.0	0.50 - 1.0	Readily indented by thumb but penetrated only with great effort
Very Stiff	2.0 - 4.0	2.0 - 4.0	1.0 - 2.0	Readily indented by thumbnail
Hard	> 4.0	> 4.0	> 2.0	Indented by thumbnail with difficulty

APPARENT DENSITY OF COHESIONLESS SOILS	
Descriptor	**SPT N_{60} (blows / 12 inches)**
Very Loose	0 - 5
Loose	5 - 10
Medium Dense	10 - 30
Dense	30 - 50
Very Dense	> 50

MOISTURE	
Descriptor	**Criteria**
Dry	No discernable moisture
Moist	Moisture present, but no free water
Wet	Visible free water

PERCENT OR PROPORTION OF SOILS	
Descriptor	**Criteria**
Trace	Particles are present but estimated to be less than 5%
Few	5 to 10%
Little	15 to 25%
Some	30 to 45%
Mostly	50 to 100%

SOIL PARTICLE SIZE		
Descriptor		**Size**
Boulder		> 12 inches
Cobble		3 to 12 inches
Gravel	Coarse	3/4 inch to 3 inches
	Fine	No. 4 Sieve to 3/4 inch
Sand	Coarse	No. 10 Sieve to No. 4 Sieve
	Medium	No. 40 Sieve to No. 10 Sieve
	Fine	No. 200 Sieve to No. 40 Sieve
Silt and Clay		Passing No. 200 Sieve

PLASTICITY OF FINE-GRAINED SOILS	
Descriptor	**Criteria**
Nonplastic	A 1/8-inch thread cannot be rolled at any water content.
Low	The thread can barely be rolled, and the lump cannot be formed when drier than the plastic limit.
Medium	The thread is easy to roll, and not much time is required to reach the plastic limit; it cannot be rerolled after reaching the plastic limit. The lump crumbles when drier than the plastic limit.
High	It takes considerable time rolling and kneading to reach the plastic limit. The thread can be rerolled several times after reaching the plastic limit. The lump can be formed without crumbling when drier than the plastic limit.

CEMENTATION	
Descriptor	**Criteria**
Weak	Crumbles or breaks with handling or little finger pressure.
Moderate	Crumbles or breaks with considerable finger pressure.
Strong	Will not crumble or break with finger pressure.

REFERENCE: Caltrans Soil and Rock Logging, Classification, and Presentation Manual (2010).

ROCK GRAPHIC SYMBOLS


IGNEOUS ROCK


SEDIMENTARY ROCK


METAMORPHIC ROCK

BEDDING SPACING

Descriptor	Thickness or Spacing
Massive	> 10 ft
Very thickly bedded	3 ft - 10 ft
Thickly bedded	1 ft - 3 ft
Moderately bedded	4 in - 1 ft
Thinly bedded	1 in - 4 in
Very thinly bedded	1/4 in - 1 in
Laminated	< 1/4 in

WEATHERING DESCRIPTORS FOR INTACT ROCK

	Diagnostic Features					
	Chemical Weathering-Discoloration-Oxidation		Mechanical Weathering and Grain Boundary Conditions	Texture and Solutioning		
Descriptor	Body of Rock	Fracture Surfaces		Texture	Solutioning	General Characteristics
Fresh	No discoloration, not oxidized	No discoloration or oxidation	No separation, intact (tight)	No change	No solutioning	Hammer rings when crystalline rocks are struck.
Slightly Weathered	Discoloration or oxidation is limited to surface of, or short distance from, fractures; some feldspar crystals are dull	Minor to complete discoloration or oxidation of most surfaces	No visible separation, intact (tight)	Preserved	Minor leaching of some soluble minerals may be noted	Hammer rings when crystalline rocks are struck. Body of rock not weakened.
Moderately Weathered	Discoloration or oxidation extends from fractures usually throughout; Fe-Mg minerals are "rusty"; feldspar crystals are "cloudy"	All fracture surfaces are discolored or oxidized	Partial separation of boundaries visible	Generally preserved	Soluble minerals may be mostly leached	Hammer does not ring when rock is struck. Body of rock is slightly weakened.
Intensely Weathered	Discoloration or oxidation throughout; all feldspars and Fe-Mg minerals are altered to clay to some extent; or chemical alteration produces in situ disaggregation (refer to grain boundary conditions)	All fracture surfaces are discolored or oxidized; surfaces are friable	Partial separation, rock is friable; in semi-arid conditions, granitics are disaggregated	Altered by chemical disintegration such as via hydration or argillation	Leaching of soluble minerals may be complete	Dull sound when struck with hammer; usually can be broken with moderate to heavy manual pressure or by light hammer blow without reference to planes of weakness such as incipient or hairline fractures or veinlets. Rock is significantly weakened.
Decomposed	Discolored of oxidized throughout, but resistant minerals such as quartz may be unaltered; all feldspars and Fe-Mg minerals are completely altered to clay		Complete separation of grain boundaries (disaggregated)	Resembles a soil; partial or complete remnant rock structure may be preserved; leaching of soluble minerals usually complete		Can be granulated by hand. Resistant minerals such as quartz may be present as "stringers" or "dikes".

Note: Combination descriptors (such as "slightly weathered to fresh") are used where equal distribution of both weathering characteristics is present over significant intervals or where characteristics present are "in between" the diagnostic feature. However, combination descriptors should not be used where significant identifiable zones can be delineated. Only two adjacent descriptors shall be combined. "Very intensely weathered" is the combination descriptor for "decomposed to intensely weathered".

PERCENT CORE RECOVERY (REC)

$$\frac{\Sigma \text{ Length of the recovered core pieces (in.)}}{\text{Total length of core run (in.)}} \times 100$$

ROCK QUALITY DESIGNATION (RQD)

$$\frac{\Sigma \text{ Length of intact core pieces} > 4 \text{ in.}}{\text{Total length of core run (in.)}} \times 100$$

Note: RQD* indicates soundness criteria not met

ROCK HARDNESS

Descriptor	Criteria
Extremely Hard	Specimen cannot be scratched with pocket knife or sharp pick; can only be chipped with repeated heavy hammer blows
Very hard	Specimen cannot be scratched with pocket knife or sharp pick; breaks with repeated heavy hammer blows
Hard	Specimen can be scratched with pocket knife or sharp pick with heavy pressure; heavy hammer blows required to break specimen
Moderately Hard	Specimen can be scratched with pocket knife or sharp pick with light or moderate pressure; breaks with moderate hammer blows
Moderately Soft	Specimen can be grooved 1/16 in. with pocket knife or sharp pick with moderate or heavy pressure; breaks with light hammer blow or heavy hand pressure
Soft	Specimen can be grooved or gouged with pocket knife or sharp pick with light pressure, breaks with light to moderate hand pressure
Very Soft	Specimen can be readily indented, grooved, or gouged with fingernail, or carved with pocket knife; breaks with light manual pressure.

FRACTURE DENSITY

Descriptor	Criteria
Unfractured	No fractures
Very Slightly Fractured	Core lengths greater than 3 ft.
Slightly Fractured	Core lengths mostly from 1 ft. to 3 ft.
Moderately Fractured	Core lengths mostly from 4 in. to 1 ft.
Intensely Fractured	Core lengths mostly from 1 in. to 4 in.
Very Intensely Fractured	Mostly chips and fragments.

REFERENCE: Caltrans Soil and Rock Logging, Classification, and Presentation Manual (2010).

Crawford & Associates, Inc.
Geotechnical Engineering, Design and Construction Services

Boring Record Legend

Rock Legend

Sheet 1 of 1

LOG OF BORING A-23-001

PROJECT NO: 23-933.1
PROJECT: Union Mine WWTP Improvement
LOCATION: Union Mine WWTP
COUNTY: El Dorado
CLIENT: Stantec
LOGGED BY: HFW
DEPTH OF BORING: 10.1 (ft)

BEGIN DATE: 06/23/2023
COMPLETION DATE: 06/23/2023
SURFACE ELEVATION: 1162.0 (ft)
SURFACE CONDITION: Gravel
WATER DEPTH: Not Encountered
READING TAKEN: N/A
HAMMER EFFICIENCY: 82.2 (%)

DRILLING CONTRACTOR: Geo-Ex Subsurface Exploration
DRILLING METHOD: 4-in Solid Stem Auger
DRILL RIG: CME 75 (Truck)
HAMMER TYPE: Automatic; 140 (lbs); 30 (in) drop
SAMPLER TYPE & SIZE: SPT (1.4" ID)
BOREHOLE DIAMETER: 4.0 in)
BACKFILL METHOD: Neat Cement Grout

ELEVATION (ft)	DEPTH (ft)	SAMPLE	SAMPLE NO	BLOWS PER 6 IN.	BLOWS PER FOOT	POCKET PEN. (TSF)	TORVANE (TSF)	GRAPHIC LOG	DESCRIPTION	RECOVERY(%)	RQD (%)	PLASTICITY INDEX	LIQUID LIMIT	MOISTURE (%)	D. DENSITY (PCF)	% PASSING 200 SIEVE	DRILL METHOD	CASING DEPTH	REMARKS
1161	1								Poorly-graded GRAVEL with SAND (GP); (medium dense); gray; dry; mostly coarse to fine GRAVEL; little coarse to fine SAND; trace fines; [Fill].										
1160	2																		
1159	3		1	16 25 23	48				METAMORPHIC ROCK (Slate); fine-grained; massive; dark gray mottled with orangish brown oxidation; moderately weathered; moderately soft.	100				5.0				
1158	4																		
1157	5		2	50/2"	50/2"				Dark gray.	50									Auger Chatter
1156	6																		
1155	7																		
1154	8																		
1153	9																		
1152	10		3	50/1"	50/1"				Bottom of borehole at 10.1 ft bgs	0									Driller calling Auger and Sampler Refusal
1151	11																		
1150	12																		
1149	13																		
1148	14																		
1147	15																		
1146	16																		

Crawford & Associates, Inc.
Geotechnical Engineering, Design and Construction Services

Crawford & Associates, Inc.
4701 Freeport Blvd
Sacramento, CA 95822
(916) 455-4225

PROJECT NO: 23-933.1
PROJECT: Union Mine WWTP Improvement
BORING: A-23-001
ENTRY BY: HFW
CHECKED BY: KKL
SHEET # 1 of 1

LOG OF BORING A-23-002

PROJECT NO: 23-933.1
PROJECT: Union Mine WWTP Improvement
LOCATION: Union Mine WWTP
COUNTY: El Dorado
CLIENT: Stantec
LOGGED BY: HFW
DEPTH OF BORING: 10.2 (ft)

BEGIN DATE: 06/23/2023
COMPLETION DATE: 06/23/2023
SURFACE ELEVATION: 1162.0 (ft)
SURFACE CONDITION: Gravel
WATER DEPTH: Not Encountered
READING TAKEN: N/A
HAMMER EFFICIENCY: 82.2 (%)

DRILLING CONTRACTOR: Geo-Ex Subsurface Exploration
DRILLING METHOD: 4-in Solid Stem Auger
DRILL RIG: CME 75 (Truck)
HAMMER TYPE: Automatic; 140 (lbs); 30 (in) drop
SAMPLER TYPE & SIZE: SPT (1.4" ID), MCAL (2.4" ID)
BOREHOLE DIAMETER: 4.0 (in)
BACKFILL METHOD: Neat Cement Grout

ELEVATION (ft)	DEPTH (ft)	SAMPLE	SAMPLE NO	BLOWS PER 6 IN.	BLOWS PER FOOT	POCKET PEN. (TSF)	TORVANE (TSF)	GRAPHIC LOG	DESCRIPTION	RECOVERY(%)	RQD (%)	PLASTICITY INDEX	LIQUID LIMIT	MOISTURE (%)	D. DENSITY (PCF)	% PASSING 200 SIEVE	DRILL METHOD	CASING DEPTH	REMARKS
1161	1								Poorly-graded GRAVEL with SAND (GP); (medium dense); gray; dry; mostly coarse to fine GRAVEL; little coarse to fine SAND; trace fines; [Fill].										
1160	2								METAMORPHIC ROCK (Slate); fine-grained; massive; gray to dark gray mottled with orangish brown oxidation; intensely to moderately weathered; moderately soft.										
1159	3		1	17 25 36	61					83									
1158	4																		
1157	5		2	15 50/5"	50/5"				Dark gray mottled with orangish brown oxidation; moderately weathered.	77									Soil Corrosion: Soil pH = 3.09 Min. Resis. = 3,220 ohm-cm Chloride = 3.5 ppm Sulfate = 81.4 ppm
1156	6																		
1155	7																		
1154	8																		
1153	9																		
1152	10		3	50/3"	50/3"					67									
									Bottom of borehole at 10.2 ft bgs										
1151	11																		
1150	12																		
1149	13																		
1148	14																		
1147	15																		
1146	16																		

Crawford & Associates, Inc.
Geotechnical Engineering, Design and Construction Services

Crawford & Associates, Inc.
4701 Freeport Blvd
Sacramento, CA 95822
(916) 455-4225

PROJECT NO: 23-933.1
PROJECT: Union Mine WWTP Improvement
BORING: A-23-002
ENTRY BY: HFW
CHECKED BY: KKL
SHEET # 1 of 1

APPENDIX B

Laboratory Test Results

Crawford & Associates, Inc.
Geotechnical Engineering, Design and Construction Services

Project Name: Union Mine WWTP Improvement
CAInc File No: 23-933.1
Date: 7/12/23
Technician: CAP

MOISTURE TEST - D2216

	1
Sample No.	A-23-002-1A
USCS Symbol	D. Rock (Slate)
Depth (ft.)	3.5
Tare No.	107
Tare (g)	14.3
Wet Soil + Tare (g)	79.1
Dry Soil + Tare (g)	76.0
Dry Soil (g)	61.7
Water (g)	3.1
Moisture (%)	**5.0**

Sunland Analytical
11419 Sunrise Gold Circle, #10
Rancho Cordova, CA 95742
(916) 852-8557

Date Reported 07/19/2023
Date Submitted 07/12/2023

To: Kennedy Hauder
Crawford & Associates, Inc.
4701 Freeport Blvd
Sacramento, CA 95822

From: Gene Oliphant, Ph.D. \ Randy Horney
General Manager \ Lab Manager

The reported analysis was requested for the following location:
Location : 23-933.1 UNIONMINE Site ID : A23-002 1A.
Thank you for your business.

* For future reference to this analysis please use SUN # 90049-186939.

EVALUATION FOR SOIL CORROSION

Soil pH	3.09	
Minimum Resistivity	3.22 ohm-cm (x1000)	
Chloride	3.5 ppm	00.00035 %
Sulfate	81.4 ppm	00.00814 %

METHODS
pH and Min.Resistivity CA DOT Test #643
Sulfate CA DOT Test #417, Chloride CA DOT Test #422m

APPENDIX C

El Dorado Trench Detail

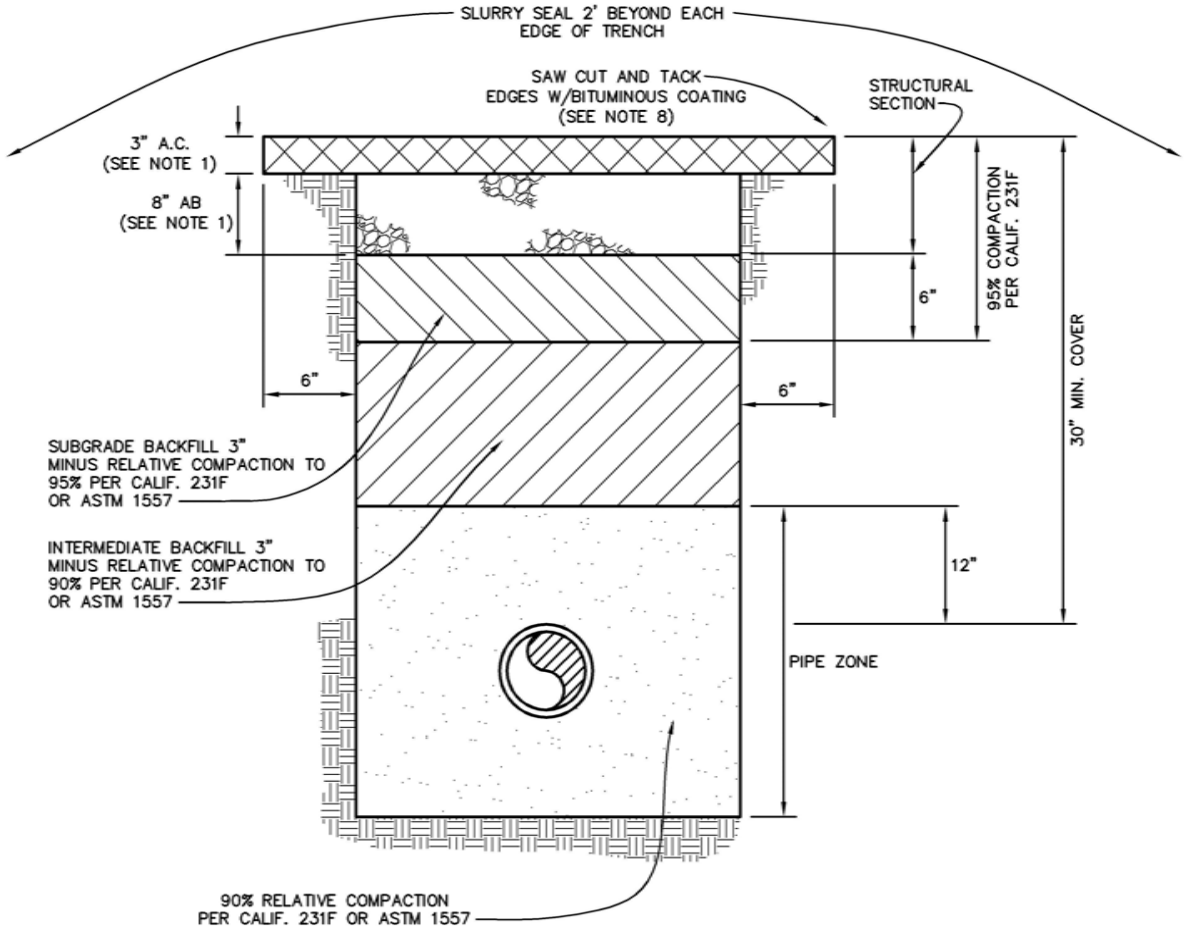

NOTES:

1. STRUCTURAL SECTION SHALL BE 3" A.C. AND 8" AB MINIMUM, OR MATCH EXISTING THICKNESS.
2. PONDING OR JETTING NOT PERMITTED UNDER OR WITHIN 2' OF EXISTING ROADWAY.
3. THE TRENCH WILL BE PAVED WITH ASPHALT WHEN ENTERING ROADSIDE DITCHES AND GUTTERS WITH A GRADE OF 5% OR BETTER. AT TAHOE, PAVE ALL TRENCHES ENTERING DITCHES.
4. IN ROADWAY FILL STEEPER THAN 4:1, THE OUTER EDGE OF TRENCH SHALL BE AT LEAST 18" FROM HINGE POINT. FOR CABLE PLOWING OPERATIONS, IT SHALL BE 36".
5. LONGITUDINAL PAVEMENT REPLACEMENT WILL BE FROM THE INNER CUT LINE TO THE EDGE OF THE EXISTING PAVEMENT, WHEN THE REMAINING PAVEMENT WIDTH WOULD BE LESS THAN 3 FEET. ON COLLECTOR ROADS, PAVEMENT SHALL BE REPLACED FROM CENTERLINE.
6. REPLACE ALL OBLITERATED PAVEMENT MARKINGS.
7. ON COLLECTOR ROADS, INTERMEDIATE BACKFILL WILL BE 3/4" AB COMPACTED TO 95%. A CONCRETE/SAND SLURRY (2 SACK) MAY BE USED IN PLACE OF 3/4" AB.
8. FINAL PAVEMENT REPLACEMENT WILL HAVE A UNIFORM WIDTH AND WILL BE APPROVED BY AN INSPECTOR BEFORE SAW CUTTING.
9. SEE FURTHER CONDITIONS ATTACHED TO PERMIT.

NOT TO SCALE

GENERATED	REVISIONS	APPROVED:	EL DORADO COUNTY	UNDERGROUND TRENCH DETAIL	STD. PLAN
NO.		Scott Clendel	DEPARTMENT OF TRANSPORTATION	IN A.C. SECTIONS ONLY	119
DATE: 03/14/90		DIRECTOR OF TRANSPORTATION			
DESIGNED:		Steven K Payne C33427	DESIGN STANDARDS		
DRAWN: JM/SR/BS		SENIOR CIVIL ENGINEER P.E. NO.			
CHECKED: SKP					
APPROVED:					



Prepared by:
Stantec Consulting Services Inc.
2250 Douglas Blvd Ste 260
Roseville, CA 95661
916.773.8100
www.stantec.com

Attachment B - Project Drawings

County of El Dorado, California

Union Mine Wastewater Treatment Facility Headworks Construction Project

PROJECT NO. 230035

VOLUME 2
March 2024

\\US0359-pgfss01\shared_projects\184032224\drawing\ACT\032224-G001 & COVER.dwg
Mar 01, 2024 - 8:20am

County of El Dorado

Stantec

BID #24-0056
Attachment B

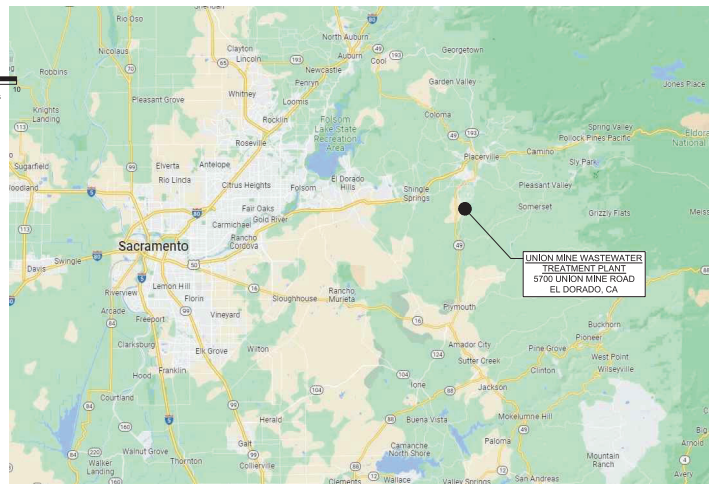

LOCATION MAP

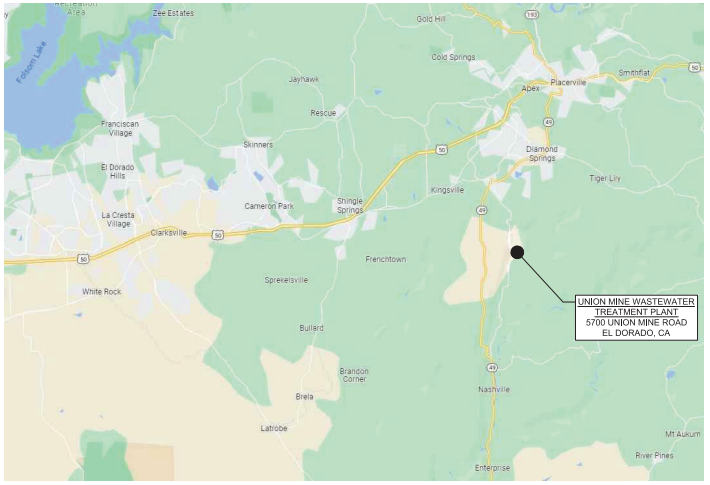

VICINITY MAP

CONTRACT DRAWINGS FOR

County of El Dorado, California

UNION MINE WASTEWATER TREATMENT FACILITY HEADWORKS CONSTRUCTION PROJECT

PROJECT NO. 230035

VOLUME 2

March 2024

Project Manager, Beth P. Cohen PE C70184

Director of Environmental Management, Jeff Warren

Revision	By	Appd.	YY.MM.DD
ISSUED FOR BID	BPC	SLB	24.03.15
Issued	By	Appd	YY.MM.DD

Permit/Seal

REGISTERED PROFESSIONAL ENGINEER BETH P. COHEN No. C70184 Exp.9/30/2024 CIVIL STATE OF CALIFORNIA

2024.03.15

Consultant

Stantec

Stantec Consulting Services Inc.
2250 Douglas Blvd., Suite 260
Roseville CA 95661
Tel:(916) 773-8100
www.stantec.com

Copyright Reserved
The Contractor shall verify and be responsible for all dimensions. DO NOT scale the drawing - any errors or omissions shall be reported to Stantec without delay. The Copyrights to all designs and drawings are the property of Stantec. Reproduction or use for any purpose other than that authorized by Stantec is forbidden.

Client/Project Logo

COUNTY OF EL DORADO
COMMUNITY DEVELOPMENT SERVICES
ENVIRONMENTAL
MANAGEMENT DEPARTMENT
2850 FAIRLANE COURT
PLACERVILLE, CALIFORNIA 95667

Client/Project

County of El Dorado
UNION MINE
WASTEWATER TREATMENT PLANT
HEADWORKS
County of El Dorado, California

File Name: 032224-G001 & COVER | ASB Dwn. | BPC Dsgn. | SLB Chkd. | 24.03.15 YY.MM.DD

Title

PROJECT TITLE
VICINITY MAP AND LOCATION MAP

Project No. 184032224
Scale AS SHOWN
Revision 0
Sheet 1 of 35
Drawing No. G001

DRAWING INDEX

SHT No.	DWG No.	DWG TITLE
1	G001	PROJECT TITLE, LOCATION AND VICINITY MAP
2	G002	INDEX OF DRAWINGS AND STANDARD NOTES
3	G003	STANDARD NOTES (CONTINUED)
4	G004	ABBREVIATIONS, AREA DESIGNATIONS, LEGENDS, PIPING SYSTEM AND SYMBOLS
5	G005	ABBREVIATIONS
6	C001	TYPICAL CIVIL DETAILS
7	C002	TYPICAL CIVIL DETAILS
8	C003	TYPICAL CIVIL DETAILS
9	C100	WASTEWATER TREATMENT PLANT GRADING AND PAVING PLAN
10	C200	NEW HEADWORKS PARTIAL PIPING PLAN
11	S001	STRUCTURAL NOTES
12	S002	STRUCTURAL NOTES
13	S003	TYPICAL STRUCTURAL DETAILS
14	S004	TYPICAL STRUCTURAL DETAILS
15	S005	TYPICAL STRUCTURAL DETAILS
16	S006	TYPICAL STRUCTURAL DETAILS
17	S007	TYPICAL STRUCTURAL DETAILS
18	S008	TYPICAL STRUCTURAL DETAILS
19	S100	NEW HEADWORKS PLAN
20	S101	NEW HEADWORKS SECTIONS
21	M001	TYPICAL MECHANICAL DETAILS 1
22	M002	TYPICAL MECHANICAL DETAILS 2
23	M003	TYPICAL MECHANICAL DETAILS 3
24	M004	TYPICAL MECHANICAL DETAILS 4
25	M005	TYPICAL MECHANICAL DETAILS 5
26	M006	TYPICAL MECHANICAL DETAILS 6
27	M100	NEW HEADWORKS PLAN
28	M101	NEW HEADWORKS SECTIONS
29	E001	ELECTRICAL SYMBOLS & ABBREVIATIONS
30	E002	SINGLE LINE DIAGRAM - ELECTRICAL
31	E003	NEW HEADWORKS SITE PLAN - ELECTRICAL SHEET 1 OF 2
32	E004	NEW HEADWORKS SITE PLAN - ELECTRICAL SHEET 2 OF 2
33	E005	TYPICAL ELECTRICAL DETAILS 1
34	E006	TYPICAL ELECTRICAL DETAILS 2
35	I001	SEPTAGE RECEIVING STATION P&ID

DRAWING NUMBERING SYSTEM

1. THE DRAWINGS ARE SUBDIVIDED INTO BROAD TRADE SECTIONS AND HAVE THE FOLLOWING PREFIXES TO THEIR NUMBERS ACCORDING TO CATEGORY AND ARE BOUND IN THE FOLLOWING ORDER.

G	GENERAL
C	CIVIL
D	DEMOLITION
S	STRUCTURAL
M	MECHANICAL
E	ELECTRICAL
I	INSTRUMENTATION

2. THE DRAWINGS WITHIN THIS SET ARE NUMBERED PER THE FOLLOWING EXAMPLE:

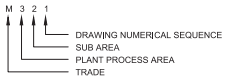

STANDARD NOTES:

GENERAL

1. THESE STANDARD NOTES APPLY TO ALL DRAWINGS.
2. ALL WORK SHALL CONFORM TO THE CONTRACT SPECIFICATIONS AND TO THE OWNER'S DESIGN STANDARDS. IN CASE OF CONFLICT, THE MOST STRINGENT REQUIREMENT SHALL APPLY.
3. NO WORK SHALL BE STARTED WITHOUT FIRST NOTIFYING THE ENGINEER 48 HOURS PRIOR TO COMMENCEMENT OF WORK.
4. CONTRACTOR SHALL BE RESPONSIBLE FOR SCHEDULING REQUIRED INSPECTIONS AND SHALL GIVE 48 HOURS NOTIFICATION TO THE ENGINEER.
5. THE CONTRACT DRAWINGS AND SPECIFICATIONS REPRESENT THE FINISHED PRODUCT. THEY DO NOT INDICATE THE METHOD OF CONSTRUCTION, UNLESS SPECIFICALLY INDICATED OTHERWISE.
6. WHERE NO SPECIFIC DETAILS ARE SHOWN, CONSTRUCTION SHALL CONFORM TO SIMILAR WORK ON THE PROJECT AND TO APPLICABLE CODES. TYPICAL DETAILS, NOT REFERENCED ON DRAWINGS, APPLY UNLESS NOTED OTHERWISE.
7. WORK DESCRIBED IN THE SPECIFICATIONS AND NOT SHOWN ON THE DRAWINGS, OR SHOWN ON THE DRAWINGS AND NOT DESCRIBED IN THE SPECIFICATIONS, SHALL BE OF LIKE EFFECT AS IF SHOWN OR DESCRIBED IN BOTH. IN CASE OF DIFFERENCES BETWEEN SPECIFICATIONS AND DRAWINGS, THE MORE STRINGENT REQUIREMENT SHALL GOVERN.
8. ALL DIMENSIONS AND DISTANCES ARE TO FACE OF CURB, CURB RETURN, FACE OF BUILDING, FACE OF WALL, FLOW LINE, PROPERTY LINE, CENTER OF STRIPING, CENTERLINE OF PIPE OR LIMITS OF IMPROVEMENTS.
9. ALL QUANTITIES SHOWN IN THE CONTRACT DRAWINGS ARE APPROXIMATE AND USED FOR PERMIT AND BOND PURPOSES ONLY. THEY SHALL NOT BE USED IN ANY WAY FOR BIDDING OR CONSTRUCTION. IT SHALL BE THE CONTRACTOR'S RESPONSIBILITY TO CONDUCT QUANTITY TAKE-OFFS FOR BIDDING AND CONSTRUCTION PURPOSES.
10. CONTRACTOR SHALL BE RESPONSIBLE FOR CONDUCTING HIS/HER OPERATION ENTIRELY OUTSIDE OF ANY FLOODPLAIN BOUNDARIES OR "NO GRADING AREAS". FLOODPLAIN BOUNDARIES SHALL BE CLEARLY DELINEATED IN THE FIELD PRIOR TO CONSTRUCTION.
11. THE CONTRACTOR SHALL PROVIDE THE PROJECT ENGINEER WITH A RECORD OF ALL FIELD CHANGES FROM THESE PLANS AND THE PROJECT ENGINEER SHALL SUPPLY THE COUNTY OF EL DORADO WITH BOND "RECORD DRAWING" PLANS UPON COMPLETION OF THE PROJECT.

SAFETY

1. CONTRACTOR AGREES THAT THE CONTRACTOR SHALL ASSUME SOLE AND COMPLETE RESPONSIBILITY FOR JOB SITE CONDITIONS DURING THE COURSE OF CONSTRUCTION OF THIS PROJECT, INCLUDING SAFETY OF ALL PERSONS AND PROPERTY. THIS REQUIREMENT SHALL APPLY CONTINUOUSLY AND NOT BE LIMITED TO NORMAL AND CITY WORKING HOURS. THE CONTRACTOR SHALL DEFEND, INDEMNIFY AND HOLD THE OWNER AND THE PROJECT ENGINEER HARMLESS FROM ANY AND ALL LIABILITY, REAL OR ALLEGED, IN CONNECTION WITH THE PERFORMANCE OF WORK ON THIS PROJECT, EXCEPTING FOR LIABILITY ARISING FROM THE SOLE NEGLIGENCE OF THE OWNER OR PROJECT ENGINEER.
2. THE COUNTY OF EL DORADO IS A MEMBER OF THE UNDERGROUND SERVICE ALERT (U.S.A.) ONE-CALL PROGRAM. THE CONTRACTOR OR ANY SUBCONTRACTOR FOR THIS CONTRACT SHALL NOTIFY MEMBERS OF U.S.A. TWO (2) WORKING DAYS IN ADVANCE OF PERFORMING ANY EXCAVATION WORK BY CALLING THE TOLL FREE NUMBER (800) 227-2600
3. CONTRACTOR SHALL COMPLY WITH THE RULES AND REGULATIONS OF THE STATE CONSTRUCTION SAFETY ORDER.
4. CONTRACTOR SHALL PROVIDE PROPER SHORING IN ALL TRENCHES DEEPER THAN FIVE FEET. ANY DAMAGE RESULTING FROM LACK OF SHORING SHALL BE THE RESPONSIBILITY OF THE CONTRACTOR. CONTRACTOR SHALL COMPLY WITH ALL OSHA SAFETY REQUIREMENTS.
5. THE CONTRACTOR SHALL MAINTAIN AN ONGOING DUST CONTROL PROGRAM, INCLUDING WATERING OF OPEN AREAS, IN ORDER TO CONFORM WITH THE LATEST STATE AND COUNTY AIR POLLUTION REGULATIONS.
6. CONTRACTOR SHALL PROVIDE ALL LIGHTS, SIGNS, BARRICADES, FLAG PERSONS, OR OTHER DEVICES NECESSARY TO PROVIDE PUBLIC SAFETY AND TO MAINTAIN TRAFFIC CONTROL AT ALL TIMES.
7. ALL EXCAVATION SHALL BE COMPLETE OR BACKFILLED AT THE END OF THE DAY OR COVERED WITH PLATING, UNLESS ALTERNATIVE PROTECTION MEASURES ARE APPROVED BY THE ENGINEER.
8. WHEN STREET WORK OR TRENCHING IS DONE THAT WOULD INTERFERE WITH EMERGENCY RESPONSE TRAFFIC, THE CONTRACTOR SHALL NOTIFY THE FIRE AND POLICE DEPARTMENTS 24-HOURS IN ADVANCE OF THE TIME AND LOCATION OF SUCH CLOSURES. THE CONTRACTOR SHALL AGAIN CONTACT THESE DEPARTMENTS AS SOON AS THE STREET IS REOPENED.
9. THE CONTRACTOR SHALL MAINTAIN AN ONGOING PROCESS OF REMOVAL OF ALL SPILLAGE AND TRACKING OF EXCAVATION MATERIAL ON ALL PAVED STREETS.
10. CONSTRUCTION EQUIPMENT THAT OPERATES AT A NOISE LEVEL IN EXCESS OF 85 DECIBELS (MEASURED ON THE A-WEIGHTED SCALE DEFINED IN ANSI-1.4), AT A DISTANCE OF 100 FEET FROM THE EQUIPMENT, IS PROHIBITED UNLESS AUTHORIZED BY THE ENGINEER.
11. THE CONTRACTOR SHALL PURSUE THE WORK IN A CONTINUOUS AND DILIGENT MANNER, CONFORMING TO ALL PERTINENT SAFETY REGULATIONS, TO ENSURE A TIMELY COMPLETION OF THE PROJECT.

STANDARD NOTES CONTINUED ON DRAWING G003

Revision	By	Appd.	YY.MM.DD

Issued	By	Appd	YY.MM.DD
ISSUED FOR BID	BPC	SLB	24.03.15

Permit/Seal

REGISTERED PROFESSIONAL ENGINEER
BETH P. COHEN
No. C70184
CIVIL
STATE OF CALIFORNIA
06/30/2024
2024.03.15

Consultant

Stantec

Stantec Consulting Services Inc.
2250 Douglas Blvd., Suite 260
Roseville CA 95661
Tel:(916) 773-8100
www.stantec.com

Copyright Reserved
The Contractor shall verify and be responsible for all dimensions. DO NOT scale the drawing - any errors or omissions shall be reported to Stantec without delay.
The Copyrights to all designs and drawings are the property of Stantec. Reproduction or use for any purpose other than that authorized by Stantec is forbidden.

Client/Project Logo

COUNTY OF EL DORADO
COMMUNITY DEVELOPMENT SERVICES
ENVIRONMENTAL
MANAGEMENT DEPARTMENT
2850 FAIRLANE COURT
PLACERVILLE, CALIFORNIA 95667

Client/Project

County of El Dorado
UNION MINE
WASTEWATER TREATMENT PLANT
HEADWORKS
County of El Dorado, California

File Name: 032224-G002 & G003	Dwn. ASB	Dsgn. BPC	Chkd. SLB	YY.MM.DD 24.03.15

Title

INDEX OF DRAWINGS, AREA DESCRIPTIONS AND STANDARD NOTES

Project No.	Scale
184032224	NONE
Revision 0	Sheet 2 of 35
Drawing No.	G002

STANDARD NOTES (CONT.):

EXISTING CONDITIONS

1. CONTRACTOR SHALL EXAMINE THE PROJECT WORK AREAS PRIOR TO BIDDING TO SATISFY HIMSELF AS TO THE NATURE AND EXTENT OF EXISTING SITE CONDITIONS THAT WILL BE ENCOUNTERED.
2. ALL MEASUREMENTS OF EXISTING TOPOGRAPHY, STRUCTURES AND UTILITIES ARE SUBJECT TO VERIFICATION IN THE FIELD BY THE CONTRACTOR. THE CONTRACTOR SHALL NOTIFY THE ENGINEER OF ANY DISCREPANCIES ON THE DRAWINGS PRIOR TO FABRICATION OR CONSTRUCTION. THE CONTRACTOR WILL BE RESPONSIBLE FOR ANY ERRORS WHICH MAY HAVE BEEN AVOIDED BY FIELD VERIFICATION.
3. DO NOT INTERRUPT EXISTING UTILITIES SERVING OCCUPIED OR USED FACILITIES, EXCEPT WHEN AUTHORIZED BY THE ENGINEER. PROVIDE TEMPORARY SERVICES DURING INTERRUPTIONS TO EXISTING UTILITIES AS REQUIRED.
4. THE TYPES, LOCATIONS, SIZES AND/OR DEPTHS OF EXISTING UNDERGROUND UTILITIES AS SHOWN ON THE IMPROVEMENT PLANS ARE OBTAINED FROM SOURCES OF VARYING RELIABILITY. THE CONTRACTOR IS CAUTIONED THAT ONLY ACTUAL EXCAVATION WILL REVEAL THE TYPES, SIZES, LOCATIONS AND DEPTHS OF SUCH UNDERGROUND UTILITIES. THE PROJECT ENGINEER ASSUMES NO RESPONSIBILITY FOR THE COMPLETENESS OR ACCURACY OF THE DELINEATION OF SUCH UNDERGROUND UTILITIES NOR FOR THE EXISTENCE OF OTHER BURIED OBJECTS OR UTILITIES WHICH ARE NOT SHOWN ON THESE PLANS. THE CONTRACTOR IS HEREBY NOTIFIED THAT, PRIOR TO COMMENCING CONSTRUCTION, HE/SHE IS RESPONSIBLE FOR CONTACTING THE UTILITY COMPANIES INVOLVED AND REQUESTING VISUAL VERIFICATION OF THE LOCATIONS OF THEIR UNDERGROUND FACILITIES SHOWN ON THESE IMPROVEMENT PLANS. THE PROJECT ENGINEER SHALL BE NOTIFIED BY THE CONTRACTOR OF THE SCHEDULED TIME AND PLACE OF SUCH VISUAL VERIFICATION TO ENABLE SAID FIRM TO HAVE A REPRESENTATIVE PRESENT. SHOULD A CONFLICT BECOME APPARENT, THE CONTRACTOR WILL CONTACT THE PARTIES RESPONSIBLE FOR RELOCATION OF THE CONFLICTING FACILITY.
5. THE CONTRACTOR SHALL REMOVE ALL OBSTRUCTIONS, BOTH ABOVE GROUND AND UNDERGROUND, EXCEPT AS NOTED IN ITEM ABOVE, AS NECESSARY FOR THE CONSTRUCTION OF THE PROPOSED IMPROVEMENTS.
6. CONTRACTOR SHALL COORDINATE UTILITY RELATED REQUIREMENTS, INCLUDING APPLICATION FOR SERVICE, WITH UTILITY COMPANIES.
7. REPLACE IN KIND ALL EXISTING STRUCTURES, PAVING AND LANDSCAPING DISTURBED BY CONSTRUCTION UNLESS NOTED OTHERWISE.
8. THE CONTRACTOR SHALL BE RESPONSIBLE FOR THE PROTECTION OF ALL EXISTING SURVEY MONUMENTS AND OTHER SURVEY MARKERS DURING CONSTRUCTION. ALL SUCH MONUMENTS OR MARKERS DESTROYED DURING CONSTRUCTION SHALL BE PLACED AT THE CONTRACTOR'S EXPENSE. CONTRACTOR SHALL NOT DISTURB ANY PERMANENT SURVEY MONUMENT WITHOUT THE CONSENT OF THE ENGINEER. A LICENSED SURVEYOR AT THE CONTRACTOR'S EXPENSE SHALL REPLACE ANY MONUMENTS DISTURBED.
9. THE CONTRACTOR SHALL, AT ALL TIMES DURING CONSTRUCTION, PROTECT FROM DAMAGE EXISTING IMPROVEMENTS ON AND AROUND THE SITE, INCLUDING, BUT NOT LIMITED TO , PAVEMENT, CURB AND GUTTER, SIDEWALK, LANDSCAPING, SIGNAGE, STORM AND SANITARY SEWER AND ALL UTILITIES. THE CONTRACTOR SHALL ASSUME SOLE RESPONSIBILITY FOR THE REPAIR OF ANY IMPROVEMENTS (EXISTING OR PROPOSED) DAMAGED THROUGHOUT THE COURSE OF CONSTRUCTION.
10. THE CONTRACTOR SHALL EXPOSE EXISTING SEWER AND DRAIN LINES FOR THE PROJECT ENGINEER TO VERIFY LOCATION AND ELEVATION PRIOR TO PLACEMENT OF PIPE, WHERE NOTED ON THE DRAWINGS, ALL COSTS OF SUCH EXCAVATION AND BACKFILL SHALL BE INCLUDED IN THE PRICES PAID FOR VARIOUS ITEMS OF WORK.
11. THE CONTRACTOR SHALL ADJUST ALL EXISTING MANHOLES AND VALVE BOXES WITHIN THE WORK AREA TO GRADE UNLESS NOTED OTHERWISE.
12. PRIOR TO WORK ON DRAWINGS THAT TIE INTO EXISTING FACILITIES, THE CONTRACTOR SHALL VERIFY ELEVATIONS SHOWN. IF ELEVATIONS DIFFER FROM THAT SHOWN ON THE PLANS, ADJUSTMENTS TO CONFORM WILL BE MADE BY THE PROJECT ENGINEER.
13. IF UNUSUAL AMOUNTS OF BONE, STONE OR ARTIFACTS ARE UNCOVERED, WORK WITHIN 50 METERS OF THE AREA SHALL CEASE IMMEDIATELY AND A QUALIFIED ARCHAEOLOGIST SHALL BE CONSULTED TO DEVELOP, IF NECESSARY, MITIGATION MEASURES TO REDUCE ANY ARCHAEOLOGICAL IMPACT TO A LESS THAN SIGNIFICANT EFFECT BEFORE CONSTRUCTION RESUMES IN THE AREA.
14. ALL AREAS OF CONSTRUCTION DISTURBANCE WHERE NATURAL COVER AND VEGETATION HAVE BEEN REMOVED SHALL BE HYDRO-SEEDED FOR EROSION CONTROL IN ACCORDANCE WITH THE SPECIFICATIONS.
15. THE CONTRACTOR IS TO VERIFY DEPTH AND LOCATION OF ALL EXISTING UTILITY STUBS PRIOR TO INSTALLATION OF ANY PIPE.

REGULATIONS AND PERMITS

1. WORKMANSHIP, MATERIALS AND METHODS OF CONSTRUCTION SHALL CONFORM TO THE MOST CURRENT EDITIONS OF THE CALIFORNIA BUILDING CODE (CBC), CALIFORNIA MECHANICAL CODE (CMC), CALIFORNIA PLUMBING CODE (CPC), CALIFORNIA ELECTRICAL CODE (CEC), CALIFORNIA ENERGY CODE (CENC), CALIFORNIA GREEN BUILDING STANDARDS CODE (CGBSC), NATIONAL FIRE PROTECTION ASSOCIATION (NFPA), AS WELL AS APPLICABLE LOCAL CODES, TRADE ASSOCIATION STANDARDS, AND MANUFACTURER'S STANDARDS.'
2. ALL WORK SHALL BE IN COMPLIANCE WITH APPLICABLE ORDINANCES AND REGULATIONS OF ANY AUTHORITY HAVING JURISDICTION. IF THE CONTRACT DOCUMENTS ARE IN VARIANCE THEREWITH, THE CONTRACTOR SHALL NOTIFY THE ENGINEER PRIOR TO PERFORMING SUCH WORK.
3. ALL MATERIALS AND INSTALLATIONS FOR BUILDINGS ACCESSIBLE TO THE PUBLIC SHALL BE IN CONFORMANCE WITH A.D.A. REQUIREMENT AND CHAPTER 11B OF THE CBC.
4. CONTRACTOR SHALL COMPLY WITH ALL ENVIRONMENTAL MITIGATION AND MONITORING REQUIREMENTS IN ACCORDANCE WITH THE SUPPLEMENTARY CONDITIONS OF THE SPECIFICATIONS.
5. CONTRACTOR SHALL FULFILL ALL OF THE STORM WATER POLLUTION PREVENTION PLAN (SWPPP) REQUIREMENTS PRIOR TO COMMENCEMENT OF CONSTRUCTION.
6. THE CONTRACTOR SHALL OBTAIN THE NECESSARY ENCROACHMENT PERMITS FROM THE COUNTY OF EL DORADO OR ANY OTHER AGENCIES HAVING JURISDICTION PRIOR TO COMMENCING ANY WORK. CONTRACTOR SHALL BE RESPONSIBLE FOR ALL CALTRANS ENCROACHMENT PERMITS.

STANDARD NOTES (CONT.):

EROSION AND SEDIMENTATION CONTROL NOTES

1. THE CONTRACTOR SHALL PREPARE SWPPP IN COMPLIANCE WITH THE COUNTY OF EL DORADO'S APPROVED NPDES PERMIT AND ANNUAL BEST MANAGEMENT PRACTICE (BMP) LISTING AND IN ACCORDANCE WITH REQUIREMENTS SET FORTH IN THE CONTRACT SPECIFICATIONS. THE SWPPP INCLUDING DETAILS, NOTES, AND CALCULATIONS SHALL BE SUBMITTED TO THE ENGINEER FOR REVIEW.
2. EROSION AND SEDIMENT CONTROL MEASURES SHALL BE EFFECTIVE FOR THE DURATION OF CONTROL ACTIVITY.
3. NO STORM RUNOFF WATER SHALL BE ALLOWED TO DRAIN DIRECTLY INTO THE EXISTING UNDERGROUND STORM SYSTEM BEFORE THE ONSITE STORM DRAIN SYSTEM IS INSTALLED.
4. AS SOON IS PRACTICAL AFTER THE NEW ONSITE SYSTEM IS INSTALLED, THE CATCH BASINS SHALL BE INSTALLED AND STRAWBALES OR APPROVED SCREENS SHALL BE PLACED AROUND THE CATCH BASINS, AS SHOWN IN THE DRAWINGS OR ON CITY STANDARD DETAILS.
5. SHOULD THE PROPOSED ONSITE STORM SYSTEM NOT BE INSTALLED BY OCTOBER 15, TEMPORARY SEDIMENT BASINS SHALL BE CONSTRUCTED AROUND THE OPENING OF ANY EXISTING STORM PIPES THAT DRAIN THE SITE, PER CITY STANDARD DETAILS OR PER A SPECIAL DETAIL SHOWN ON THE PLAN.
6. THE NAME, ADDRESS AND 24-HOUR TELEPHONE NUMBER OF THE RESPONSIBLE PERSON FOR IMPLEMENTATION OF EROSION AND SEDIMENTATION CONTROL PLAN SHALL BE PROVIDED.
7. A MINIMUM OF 50 LINEAR FEET BY 12 FEET WIDTH OF DRAIN ROCK, 1-1/2" DIAMETER OR LARGER AT A MINIMUM DEPTH OF 6", SHALL BE INSTALLED AT EACH SITE INGRESS/EGRESS, UNLESS NOTED OTHERWISE ON THE DRAWINGS. THIS DOES NOT NEED BE DONE AT INGRESS/EGRESS LOCATIONS, WHICH WILL BE CLOSED BY IMMOVABLE BARRICADES DURING CONSTRUCTION.
8. ALL EROSION AND SEDIMENTATION CONTROL MEASURES SHALL BE MAINTAINED UNTIL DISTURBED AREAS ARE STABILIZED. CHANGES TO THE EROSION AND SEDIMENTATION CONTROL PLAN SHALL BE MADE TO MEET FIELD CONDITIONS, BUT ONLY WITH THE APPROVAL OF OR AT THE DIRECTION OF THE PROJECT ENGINEER.
9. DURING THE RAINY SEASON AS SPECIFIED IN NOTE # 1, ALL SIDEWALK AND PAVED AREAS SHALL BE KEPT CLEAR OF EARTH MATERIAL AND DEBRIS. THE SITE SHALL BE MAINTAINED SO AS TO MINIMIZE SEDIMENT LADEN RUNOFF FROM ENTERING ANY STORM DRAINAGE SYSTEM.
10. THE CONTRACTOR SHALL BE RESPONSIBLE TO INSPECT AND REPAIR ALL EROSION CONTROL FACILITIES AT THE END OF EACH WORK DAY DURING THE RAINY SEASON.
11. THE CONTRACTOR SHALL BE RESPONSIBLE TO CLEAN OUT SEDIMENT BASINS WHENEVER THE LEVEL OF SEDIMENT REACHES THE SEDIMENT CLEAN OUT LEVEL INDICATED ON THE PLANS.
12. THE CONTRACTOR SHALL BE RESPONSIBLE TO PROTECT BORROW AREAS AND/OR STOCKPILES WITH APPROPRIATE EROSION CONTROL MEASURES SATISFACTORY TO THE CITY ENGINEER.
13. THE CLEANING OF PAVED STREETS, DURING AND AT THE COMPLETION OF CONSTRUCTION, SHALL BE PERFORMED WITH MECHANICAL SWEEPERS, THE USE OF WATER TRUCKS TO "WASH DOWN" THE STREET IS PROHIBITED.

MECHANICAL EQUIPMENT AND PIPING

1. PROVIDE ALL APPURTENANCES REQUIRED FOR PROPER OPERATION OF EQUIPMENT, IN ACCORDANCE WITH THE SPECIFICATIONS, WHETHER OR NOT THEY ARE SHOWN ON THE DRAWINGS.
2. PIPING CONNECTIONS TO EQUIPMENT SHALL BE VERIFIED AND ADJUSTED TO MATCH ACTUAL EQUIPMENT FURNISHED AT NO ADDITIONAL COST TO OWNER.
3. SUCTION AND DISCHARGE PIPING FOR PUMPS, BLOWERS, ETC. SHALL BE SUPPORTED SO THAT THE WEIGHT OF THE PIPING IS NOT DISTRIBUTED TO THE EQUIPMENT.
4. THE MOST STRINGENT REQUIREMENTS FOR EQUIPMENT SHALL GOVERN IN THE CASE OF A CONFLICT BETWEEN DRAWINGS AND SPECIFICATIONS.
5. PROVIDE WARNING SIGNS IN ACCORDANCE WITH THE SPECIFICATIONS FOR ALL REMOTELY CONTROLLED EQUIPMENT.
6. NOT ALL PIPE SUPPORTS ARE SHOWN ON THE DRAWINGS. FURNISH AND INSTALL SUPPORTS IN ACCORDANCE WITH THE SPECIFICATIONS AND TYPICAL DETAILS, AT NO ADDITIONAL COST TO THE OWNER.
7. NOT ALL PIPE FITTINGS ARE SHOWN ON THE DRAWINGS. FURNISH AND INSTALL ALL FITTINGS, AS REQUIRED FOR THE EQUIPMENT FURNISHED, AT NO ADDITIONAL COST TO THE OWNER.
8. EQUIPMENT LAYOUT SHOWN ON THE DRAWINGS IS FOR ONE MANUFACTURER. CONTRACTOR SHALL MAKE ALL NECESSARY STRUCTURAL, MECHANICAL, AND BUILDING MODIFICATIONS NECESSARY TO ACCOMMODATE ALTERNATIVE EQUIPMENT AT NO ADDITIONAL COST TO THE OWNER.

STANDARD NOTES (CONT.):

CIVIL, PIPELINES AND OTHER UTILITIES

1. GRADING SHALL INCLUDE ALL LABOR, MATERIALS AND EQUIPMENT NECESSARY TO CONSTRUCT GRADES AS SHOWN ON THE GRADING PLAN. NO ADDITIONAL COMPENSATION WILL BE ALLOWED FOR THE DISPOSAL OF EXCESS EXCAVATION PLACED AT THE DIRECTION OF THE PROJECT ENGINEER IN ADVANCE OF ANY CHANGES DEEMED NECESSARY TO OBTAIN A BALANCED GRADING PROGRAM TO MEET MINIMUM STANDARDS, MINIMUM COMPACTION OUTSIDE THE STREET RIGHT-OF-WAY SHALL BE 90%.
2. ALL GRADING SHALL BE COMPLETED IN ACCORDANCE WITH THE RECOMMENDATIONS OF THE GEOTECHNICAL SOILS REPORT.
3. THE TYPE, SIZE, LOCATION AND DEPTH OF EXISTING UNDERGROUND UTILITIES SHOWN ON THESE DRAWINGS WERE OBTAINED FROM SOURCES OF VARYING RELIABILITY. NO RESPONSIBILITY FOR THE COMPLETENESS AND/OR ACCURACY OF THE DELINEATION OF SUCH UNDERGROUND UTILITIES, WHICH MAY BE ENCOUNTERED, IS ASSUMED BY THE ENGINEER OR OWNER. IT SHALL BE THE RESPONSIBILITY OF THE CONTRACTOR TO VERIFY THE EXISTENCE AND LOCATION OF ALL UNDERGROUND UTILITIES PRIOR TO COMMENCEMENT OF CONSTRUCTION.
4. THE COST FOR POTHOLING TO LOCATE EXISTING UNDERGROUND UTILITIES SHOWN ON THE DRAWINGS SHALL BE INCLUDED IN THE CONTRACTOR'S BID.
5. LOCATION OF PIPELINES SHOWN ON THE DRAWINGS ARE APPROXIMATE. CONTRACTOR IS RESPONSIBLE FOR PROVIDING PIPE FITTINGS (WHETHER OR NOT SHOWN ON THE DRAWINGS) TO PLACE THE ALIGNMENT OF THE PIPELINES AS CLOSE AS PRACTICABLE TO THAT SHOWN ON THE DRAWINGS.
6. PROVIDE 12 INCHES MINIMUM VERTICAL CLEARANCE BETWEEN PIPELINE AND EXISTING UTILITIES, UNLESS NOTED OTHERWISE.
7. PIPELINES SHALL SLOPE UNIFORMLY BETWEEN ELEVATIONS SHOWN ON PLANS AND PROFILE. ALL PIPE ELEVATIONS SHOWN REFER TO INVERT UNLESS NOTED OTHERWISE.
8. ALL PIPELINES SHALL HAVE A MINIMUM COVER OF 36 INCHES, UNLESS NOTED OTHERWISE.
9. GROUND PROFILE IS SHOWN ALONG CENTERLINE UNLESS OTHERWISE NOTED.
10. DEFLECT JOINTS ON STANDARD FITTINGS OR ADJACENT PIPE JOINTS TO OBTAIN VERTICAL OR HORIZONTAL CURVES SHOWN ON THE DRAWINGS, NOT TO EXCEED 1/2 OF MANUFACTURER'S RECOMMENDED MAXIMUM DEFLECTION.
11. UNDERGROUND FACILITIES SHALL BE INSTALLED PRIOR TO INSTALLATION OF CURB, GUTTER AND SIDEWALK.
12. CASTINGS COLLARS FOR UNDERGROUND UTILITIES SHALL BE ADJUSTED TO 3/8 INCH BELOW FINISH GRADE BY THE UNDERGROUND CONTRACTOR (AFTER COMPLETION OF PAVING).
13. LINE VALVES SHALL BE SHOP TESTED TO SEAT IN BOTH DIRECTIONS TO FACILITATE FIELD PRESSURE TESTING.
14. ALL CONCRETE VAULTS AND COVERS IN TRAFFIC OR PARKING AREAS SHALL BE DESIGNED FOR H-20 LOADINGS.
15. THRUST BLOCKS ARE NOT ALLOWED FOR PIPE AND FITTING RESTRAINT, UNLESS NOTED OTHERWISE. FITTINGS AND PIPE JOINTS SHALL BE RESTRAINED IN ACCORDANCE WITH THE SPECIFICATIONS AND AS SHOWN ON THE DRAWINGS.
16. CONTRACTOR SHALL BE RESPONSIBLE FOR DAMAGE DUE TO DUST OR EROSION RESULTING FROM THE WORK DONE BY THE CONTRACTOR.
17. IF SAW CUT IS WITHIN 2 FEET OF AN EXISTING PAVEMENT EDGE OR EXISTING PAVEMENT PATCH, REMOVE EXISTING PAVEMENT TO THAT EDGE AND REPLACE THE ENTIRE PAVEMENT.
18. ALL PIPE PENETRATIONS THROUGH WALLS AND SLABS SHALL BE PROVIDED WITH SLEEVES IN ACCORDANCE WITH THE TYPICAL DETAIL "M305", UNLESS NOTED OTHERWISE.
19. CONTRACTOR SHALL KEEP EXCAVATIONS FREE FROM WATER DURING CONSTRUCTION. STATIC WATER LEVEL SHALL BE DRAWN DOWN A MINIMUM OF 3 FEET BELOW BOTTOM OF EXCAVATIONS. DISPOSAL OF WATER SHALL NOT DAMAGE PROPERTY OR CREATE A PUBLIC NUISANCE.
20. THE CONTRACTOR SHALL MAINTAIN ALL EXISTING DRAINAGE FACILITIES AND PROVIDE NECESSARY EROSION CONTROL MEASURES WITHIN THE CONSTRUCTION AREA UNTIL THE DRAINAGE IMPROVEMENTS ARE IN PLACE AND FUNCTIONING. THE CONTRACTOR SHALL PROVIDE AN EROSION CONTROL PLAN TO THE ENGINEER FOR REVIEW.

STRUCTURAL
SEE STRUCTURAL DRAWINGS FOR GENERAL NOTES ON CONCRETE CONSTRUCTION.

ELECTRICAL
SEE ELECTRICAL DRAWINGS FOR GENERAL NOTES ON ELECTRICAL AND INSTRUMENTATION CONSTRUCTION.

STANDARD NOTES (CONT.):

HVAC

1. INSTALL AND ADJUST HEATING, VENTILATION AND AIR CONDITIONING EQUIPMENT AND DUCTWORK TO AVOID INTERFERENCE WITH PIPING, ELECTRICAL CONDUITS, EQUIPMENT, AND STRUCTURES. DUCTWORK SHALL BE A MINIMUM OF 8 FEET ABOVE FINISHED FLOOR UNLESS NOTED OTHERWISE.
2. DUCTWORK SHALL BE FABRICATED AND INSTALLED FOR THE OPERATING PRESSURES INDICATED IN THE SPECIFICATIONS. ALL DUCTWORK SHALL HAVE A MINIMUM "SMACNA" PRESSURE CLASSIFICATION OF TWO INCHES.
3. NOT ALL DUCTING SUPPORTS ARE SHOWN ON THE DRAWINGS. FURNISH AND INSTALL SUPPORTS IN ACCORDANCE WITH THE SPECIFICATIONS AND TYPICAL DETAILS AT NO ADDITIONAL COST TO THE OWNER.
4. PROVIDE SEISMIC BRACING FOR ALL DUCTING IN ACCORDANCE WITH "SMACNA" RESTRAINT GUIDELINES.

MATERIALS AND PRODUCTS

1. ALL PRODUCTS AND MATERIALS SHALL BE INSTALLED IN ACCORDANCE WITH THE MANUFACTURER'S INSTRUCTIONS, UNLESS NOTED OTHERWISE.
2. ALL MATERIALS AND EQUIPMENT FURNISHED SHALL BE NEW AND FREE FROM DEFECTS. MATERIALS USED MUST HAVE THE MANUFACTURER'S WARRANTED SUPPORT.
3. MATERIALS, EQUIPMENT, ETC., NOT INDICATED ON THE DRAWINGS OR SPECIFIED, WHICH ARE MANIFESTLY OR REASONABLY REQUIRED, OR NECESSARY FOR A SUCCESSFUL, EFFICIENT AND COMPLETE INSTALLATION, SHALL NOT RELIEVE THE CONTRACTOR FROM PERFORMING SUCH WORK. THEY SHALL BE HELD TO BE IMPLIED, AND SHALL BE FURNISHED AND INSTALLED AT NO ADDITIONAL COST TO THE OWNER.
4. WHERE REFERENCE IS MADE TO VARIOUS TEST STANDARDS FOR MATERIALS, SUCH STANDARDS SHALL BE THE LATEST EDITION AND/OR ADDENDUM.
5. ALL BUILDING COMPONENTS, BUILDING SYSTEMS AND BUILDING PRODUCTS ARE TO BE LOCATED, FURNISHED, PROVIDED, AND INSTALLED WITH NECESSARY ACCESSORIES INCLUDING BUT NOT LIMITED TO EXPANSION/CONTRACTION CONTROL, BRACING, FLASHING, ELECTRONIC DEVICES, VALVES, ACCESSORIES, SUPPORTS, CONNECTIONS, DRAINAGE, VENTILATION, ETC., FOR A COMPLETE AND WORKING ASSEMBLY, PER CODES, DRAWINGS AND SPECIFICATIONS, AND PER THE RECOMMENDATIONS OF ALL MANUFACTURERS, INCLUDING THOSE DIRECTLY INVOLVED AND THOSE RELATED OR INTERFACING.
6. CONTRACTOR SHALL VERIFY ALL CONTROLLING DIMENSIONS PRIOR TO PREPARATION OF SHOP DRAWINGS AND ORDERING OF MATERIALS.
7. CONTRACTOR SHALL BE REQUIRED TO ARRANGE FOR ALL STORAGE/STAGING AREAS, WHICH MAY NOT BE SHOWN ON THE DRAWINGS, AND PROVIDE SECURITY AT NO ADDITIONAL COST TO THE OWNER.
8. ALL STAINLESS STEEL SHALL BE TYPE 304 OR 316, UNLESS NOTED OTHERWISE.
9. ALL NUTS AND BOLTS TO BE INSTALLED UNDERGROUND SHALL BE STAINLESS STEEL TYPE 316, UNLESS NOTED OTHERWISE.
10. ISOLATE ALL COPPER PIPE FROM OTHER MATERIALS WITH PVC TAPE.
11. SEPARATE DISSIMILAR METALS AND ALUMINUM IN CONTACT WITH CONCRETE, WITH BITUMINOUS PAINT OR AN ALTERNATIVE PRODUCT APPROVED BY THE ENGINEER.

WORKMANSHIP

1. CONTRACTOR DAMAGED WORK MUST BE REPLACED AT NO ADDITIONAL COST TO THE OWNER. REPAIR OF CONSTRUCTION DAMAGE TO EXISTING FACILITIES AND UTILITIES IS THE CONTRACTOR'S RESPONSIBILITY.
2. THE ENGINEER RESERVES THE RIGHT TO DIRECT THE CONTRACTOR TO REMOVE AND REINSTALL WORK, WHICH IN THE ENGINEER'S OPINION DOES NOT MAINTAIN WORKMANSHIP AND CRAFTSMANSHIP STANDARDS.
3. THE CONTRACTOR SHALL PROVIDE ALL MEASURES NECESSARY TO PROTECT BUILDINGS AND STRUCTURES DURING CONSTRUCTION. SUCH MEASURES SHALL INCLUDE, BUT ARE NOT LIMITED TO, BRACING AND SHORING. OBSERVATION VISITS TO THE SITE BY THE DESIGN ENGINEER SHALL NOT INCLUDE INSPECTION OF THE ABOVE ITEMS.
4. CONSTRUCTION MATERIAL SHALL BE SPREAD OUT IF PLACED ON FRAMING FLOORS OR ROOF. LOAD SHALL NOT EXCEED THE DESIGN LIVE LOAD PER SQUARE FOOT.
5. CONTRACTOR SHALL MAINTAIN THE JOB SITE IN CLEAN, SAFE AND USABLE CONDITION THROUGHOUT THE COURSE OF CONSTRUCTION. ALL SPILLS OF SOIL, ROCK, CONSTRUCTION DEBRIS, ETC., SHALL BE REMOVED IMMEDIATELY FROM PUBLIC ACCESS AREAS. ALL TRASH, CONSTRUCTION DEBRIS AND MATERIALS SHALL BE CONTAINED WITHIN THE CONSTRUCTION AREA UNTIL OFF-SITE DISPOSAL CAN BE ARRANGED.

Revision	By	Appd.	YY.MM.DD

Issued	BPC By	SLB Appd	24.03.15 YY.MM.DD
ISSUED FOR BID			

Permit/Seal

REGISTERED PROFESSIONAL ENGINEER — BRETT P. COREN — No. C70184 — 9/30/2024 — CIVIL — STATE OF CALIFORNIA

2024.03.15

Consultant

Stantec

Stantec Consulting Services Inc.
2250 Douglas Blvd., Suite 260
Roseville CA 95661
Tel:(916) 773-8100
www.stantec.com

Copyright Reserved
The Contractor shall verify and be responsible for all dimensions. DO NOT scale the drawing - any errors or omissions shall be reported to Stantec without delay.
The Copyright to all designs and drawings are the property of Stantec. Reproduction or use for any purpose other than that authorized by Stantec is forbidden.

Client/Project Logo

COUNTY OF EL DORADO
COMMUNITY DEVELOPMENT SERVICES
ENVIRONMENTAL
MANAGEMENT DEPARTMENT
2850 FAIRLANE COURT
PLACERVILLE, CALIFORNIA 95667

Client/Project

County of El Dorado
UNION MINE
WASTEWATER TREATMENT PLANT
HEADWORKS
County of El Dorado, California

File Name: 032224-G002 & G003 | ASB Dwn. | BPC Dsgn. | SLB Chkd. | 24.03.15 YY.MM.DD

Title

STANDARD NOTES
(CONTINUED)

Project No. 184032224 | Scale NONE
Revision 0 | Sheet 3 of 35 | Drawing No. G003

\\us035ha-cifs01\Current_Projects\184032224\drawing\cad\184032224-G002 & G003 - STANDARD NOTES 2.dwg

SYMBOLS

- SECTION IDENTIFICATION LETTER (A / M101)
- SHEET OR DRAWING NUMBER WHERE SECTION APPEARS
- SECTION IDENTIFICATION LETTER (D / S201)
- SHEET OR DRAWING NUMBER WHERE SECTION IS TAKEN
- DETAIL IDENTIFICATION NUMBER (3 / S201)
- SHEET OR DRAWING NUMBER WHERE DETAIL IS TAKEN OR APPEARS
- FME 30021 — EXISITNG EQUIPMENT TAG
- MTR 12011 — NEW EQUIPMENT TAG
- MOV 17115 — EXISTING VALVE TAG
- SLG 17013 — NEW VALVE TAG
- NEW FACILITIES
- EXISTING FACILITIES
- FUTURE FACILITIES
- NEW FENCE
- EXISTING FENCE
- NEW CONTOUR
- EXISTING CONTOUR
- NEW EMBANKMENT
- EXISTING PIPE OR STRUCTURE TO BE ABANDONED OR REMOVED
- NEW SPOT ELEVATION (TOW 12.01)
- EXISTING SPOT ELEVATION (TOW 12.0)
- TREE & TRUNK DIAMETER (12")
- TREE TO BE REMOVED
- NEW MANHOLE & PIPELINE
- EXISTING MANHOLE & PIPELINE
- FUTURE MANHOLE & PIPELINE
- NEW POWER POLE
- EXISTING POWER POLE
- EXISTING UNDERGROUND SERVICE (TYPE NOTED) (GAS)
- PROPERTY LINE
- CONCRETE LINED DITCH
- CONCRETE CURB & GUTTER
- DRAINAGE SWALE
- CONCRETE V-GUTTER
- COBBLE LINED CHANNEL
- VALLEY GUTTER W/ UNDERDRAIN
- DRAINAGE SWALE W/ UNDERDRAIN SYSTEM

PIPING SYMBOLS

- AIR RELEASE VALVE / AIR & VACUUM VALVE COMBINATION AIR VALVE
- KNIFE GATE VALVE
- GATE VALVE
- CHECK VALVE
- CATHODIC PROTECTION TEST STATION (CT)
- SPLIT DISK CHECK VALVE
- SOLENOID VALVE (S)
- MOTOR OPERATED VALVE (M)
- PRESSURE REDUCING VALVE
- BACK-FLOW PREVENTER
- DIAPHRAGM/PINCH VALVE
- PRESSURE RELIEF VALVE
- PRESSURE GAUGE OR SWITCH
- PRESSURE RELIEF VALVE PLASTIC
- ROTARY LOBE PUMP (P)
- THERMOMETER
- MIXER
- ULTRA SONIC LEVEL SENSOR
- PLUG VALVE
- PLUG VALVE
- BALL VALVE
- GLOBE VALVE
- ANGLE VALVE
- BUTTERFLY VALVE
- NEEDLE VALVE
- UNION
- REDUCER
- STRAINER
- CLEANOUT
- HOSE VALVE
- 3W FIRE HYDRANT
- 1W FIRE HYDRANT
- POST INDICATOR VALVE (PIV)
- FIRE DEPARTMENT CONNECTION (FDC)
- SEWAGE ARV
- ACCESS DOOR
- PROGRESSIVE CAVITY PUMP
- MECHANICAL JOINT OR BELL & SPIGOT FITTING (OR)
- FLANGE X MJ ADAPTOR
- FLANGED FITTING
- GROOVED COUPLING
- FLANGED COUPLING ADAPTER
- WALL SLEEVE
- FLEXIBLE COUPLING
- BELL RING PENETRATION

GATE & VALVE ABBREVIATIONS

ARV	AIR RELEASE VALVE
ASV	ANGLE STOP VALVE
AVV	AIR & VACUUM VALVE
BCV	BALL CHECK VALVE
BFV	BUTTERFLY VALVE
BV	BALL VALVE
CAV	COMBINATION AIR VALVE
CP	CATHODIC PROTECTION
CT	CATHODIC TEST STATION
CV	CHECK VALVE, CONTROL VALVE
DCDA	DOUBLE CHECK DETECTOR ASSEMBLY
DV	DIAPHRAGM VALVE
FCV	FLEXIBLE CHECK VALVE
FDC	FIRE DEPARTMENT CONNECTION
FG	FLAP GATE
FH	FIRE HYDRANT
FSCV	FLEXIBLE SWING CHECK VALVE
GLV	GLOBE VALVE
GTV	GATE VALVE
GTV & B	GATE VALVE & BOX
HGV	HOSE GATE VALVE
HOG	HYDRAULICALLY OPERATED GATE
HV	HOSE VALVE
KG	KNIFE GATE
LV	LINE VALVE
MBV	MOTORIZED BALL VALVE
MOG	MOTORIZED OPERATED GATE
MOV	MOTORIZED OPERATED VALVE
MV	MUD VALVE
MWR	MOTORIZED WEIR
NV	NEEDLE VALVE
PARV	PLASTIC AIR RELEASE VALVE
PBV	PLASTIC BALL VALVE
PCHV	PINCH VALVE
PCV	PLASTIC CHECK VALVE
PH	POST HYDRANT
PIV	POST INDICATOR VALVE
PRFV	PRESSURE RELIEF VALVE PLASTIC
PRV	PRESSURE REGULATING (REDUCING) VALVE
PRVP	PRESSURE RELIEF VALVE PLASTIC
PV	PLUG VALVE
RV	RELIEF VALVE
SARV	SEWAGE AIR RELEASE VALVE
SAVV	SEWAGE AIR VACUUM VALVE
SCAV	SEWAGE COMBINATION AIR VALVE
SCV	SPLIT DISC CHECK VALVE
SSG	SLUICE GATE
SLG	SLIDE GATE
SOLV	SOLENOID VALVE
STP	STOP PLATE
TV	THERMOSTATIC VALVE
VB	VALVE BOX

PIPING SYSTEM ABBREVIATIONS

A	AERATION AIR
CEN	CENTRATE
CLS	CHLORINE SOLUTION
D	DRAIN
DEW	DEWATERING DISCHARGE
DF	DIESEL FUEL
E	ELECTRICAL CONDUIT
EA	EXHAUST AIR
EFF	EFFLUENT
EPO	EMERGENCY PLANT DISCHARGE
FA	FOUL AIR
FW	FIRE WATER
G	GAS
GT	GRIT
HW	HOT WATER (POTABLE)
IA	INSTRUMENT AIR
INF	PLANT INFLUENT WASTEWATER
STO	SLUDGE THICKENER OVERFLOW
IR	IRRIGATOIN WATER
NG	NATURAL GAS
NPW	NON-POTABLE WATER
OF	OVERFLOW
PSS	PRESSURIZED SUMP PUMP
PW	POTABLE WATER
RW	RAW WATER
SAM	SAMPLE
SD	STORM DRAIN
SEP	SEPTAGE
SEW	SEWAGE
SL	SLUDGE
SS	SANITARY SEWER

TYPICAL DETAILS IDENTIFICATION SYSTEM

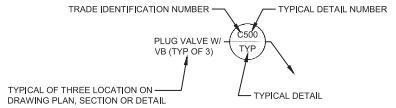

PIPING IDENTIFICATION SYSTEM

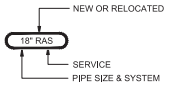



PIPING IDENTIFICATION SYSTEM NOTE:

SEE PIPING ABBREVIATIONS THIS SHEET. SEE SPECIFICATION FOR PIPE MATERIAL NOT SPECIFICALLY CALLED OUT ON THE DRAWINGS

CHEMICAL CONDUIT IDENTIFICATION SYSTEM

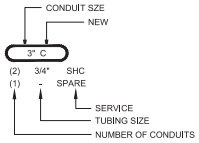

CHEMICAL CONDUIT NOTE:

ONLY ONE (1) LINE OF CHEMICAL TUBING PER CONDUIT.

VALVE & EQUIPMENT IDENTIFICATION SYSTEM

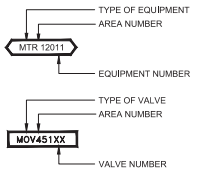

EQUIP & VALVE ID NOTE:

SEE EQUIPMENT & VALVE ABBREVIATIONS THIS SHEET.

PIPE TYPE ABBREVIATIONS

ABS	ACRYLONITRILE-BUTADIENE-STYRENE
ACP	ASBESTOS CEMENT PIPE
BSP	BLACK STEEL PIPE
CCP	CONCRETE CYLINDER PIPE
CCSP	CEMENT MORTAR LINED & COATED STEEL PIPE
CIP	CAST IRON PIPE
CISP	CAST IRON SOIL PIPE
CMP	CORRUGATED METAL PIPE
CPVC	CHLORINATED POLYVINYL CHLORIDE PIPE
CU	COPPER PIPE
DIP	DUCTILE IRON PIPE
DUP	DURIRON PIPE
ELCS	EPOXY LINED & COATED STEEL PIPE
FRP	FIBERGLASS REINFORCED PIPE
GLCIP	GLASS LINED CAST IRON PIPE
GSP	GALVANIZED STEEL PIPE
PCMP	PERFORATED CORRUGATED METAL PIPE
PLAC	PLASTIC LINED ASBESTOS CEMENT PIPE
PRCCP	PRESTRESSED CONCRETE CYLINDER PIPE
PT	PLASTIC TUBING
PVC	POLYVINYL CHLORIDE PIPE
PVC-UVR	POLYVINYL CHLORIDE PIPE - UV RESISTANT
RCP	REINFORCED CONCRETE PIPE
SLS	SARAN LINED STEEL PIPE
SST	STAINLESS STEEL PIPE
WSP	WELDED STEEL PIPE

HATCHING LEGEND

- EXISTING AC PAVING (PLAN)
- NEW LIGHT DUTY AC PAVING (PLAN)
- NEW LIGHT DUTY AGGREGATE BASE (PLAN)
- NEW HEAVY DUTY AC PAVING (PLAN)
- EXISTING AC PAVING (SECTION)
- NEW AC PAVING (SECTION)
- NEW AGGREGATE BASE (SECTION)
- NEW HEAVY DUTY AGG BASE (PLAN)
- EXISTING GRADE & FILL (SECTION)
- ROCK SLOPE PROTECTION (PLAN & SECTION)
- EXISTING CONCRETE (PAN & SECTION)
- NEW CONCRETE (PLAN & SECTION)
- GRATING (TYPE A)
- GRATING (TYPE B)
- ENVIRONMENTALLY SENSITIVE AREA (ESA)

Revision	By	Appd.	YY.MM.DD

Issued	By	Appd	YY.MM.DD
ISSUED FOR BID	BPC	SLB	24.03.15

Permit/Seal

REGISTERED PROFESSIONAL ENGINEER — BETH P. COHEN — No. C70184 — Exp.9/30/2024 — CIVIL — STATE OF CALIFORNIA

2024.03.15

Consultant

Stantec

Stantec Consulting Services Inc.
2250 Douglas Blvd., Suite 260
Roseville CA 95661
Tel:(916) 773-8100
www.stantec.com

Copyright Reserved
The Contractor shall verify and be responsible for all dimensions. DO NOT scale the drawing - any errors or omissions shall be reported to Stantec without delay.
The Copyrights to all designs and drawings are the property of Stantec. Reproduction or use for any purpose other than that authorized by Stantec is forbidden.

Client/Project Logo

COUNTY OF EL DORADO
COMMUNITY DEVELOPMENT SERVICES
ENVIRONMENTAL
MANAGEMENT DEPARTMENT
2850 FAIRLANE COURT
PLACERVILLE, CALIFORNIA 95667

Client/Project

County of El Dorado
UNION MINE
WASTEWATER TREATMENT PLANT
HEADWORKS
County of El Dorado, California

File Name: 032224-G004	Dwn.	Dsgn.	Chkd.	YY.MM.DD
	ASB	BPC	SLB	24.03.15

Title

ABBREVIATION, AREA DESIGNATION, LEGENDS, PIPING SYSTEM AND SYMBOLS

Project No.	Scale
184032224	NONE
Revision	Sheet
0	4 of 35

Drawing No. G004

NOTE: NOT ALL ABBREVIATIONS APPEARING ON THIS SHEET ARE USED ON THESE DOCUMENTS.

AB	ANCHOR BOLT, AGGREGATE BASE, ANOXIC BASIN
ABND	ABANDONED
ABS	ACRILONTRILE-BUTADIENE-STYRENE
AC	ASPHALT CONCRETE, ACRE
ACP	ASBESTOS CEMENT PIPE
ACST	ACOUSTIC
ADD	ADDENDUM, ADDITION(AL)
ADJ	ADJUSTABLE
ADPTR	ADAPTER
ADW	AVERAGE DRY WEATHER
AGG	AGGREGATE
AHR	ANCHOR
A/C	AIR CONDITIONER
A/D	ADD/DEDUCT
AL	ALUMINUM
ALTN	ALTERNATE
ALUM	ALUMINUM SULFATE
AMB	AMBIENT
AMP	AMPERES
APPROX	APPROXIMATE(LY)
ARCH	ARCHITECTURAL
ARV	AIR RELEASE VALVE
ASV	AIR STOP VALVE
AT	ALUMINUM THRESHOLD
ATM	ATMOSPHERE
ATS	ANODE TEST STATION
AUTO	AUTOMATIC
AUX	AUXILIARY
AVG	AVERAGE
AVV	AIR VACUUM VALVE
BC	BEGINNING OF CURVE
BD	BAR DIAMETER
BF	BLIND FLANGE
BFP	BACK FLOW PREVENTER
BLDG	BUILDING
BLK	BLOCK
BLKG	BLOCKING
BM	BEAM, BENCHMARK
BO	BLOW-OFF
BOD	BIOCHEMICAL OXYGEN DEMAND
BOT	BOTTOM
BRKR	BREAKER
BRKT	BRACKET
BRV	BRAIDED VINYL
BRZ	BRONZE
BSP	BLACK STEEL PIPE
BTU	BRITISH THERMAL UNIT
BU	BUILT-UP
BUV	BUTTERFLY VALVE
BV	BALL VALVE
BW	BARBED WIRE
CAP	CAPACITY
CAV	COMBINATION AIR VALVE
CB	CATCH BASIN
CC	CENTER TO CENTER
CCP	CONCRETE CYLINDER PIPE
CCSP	CEMENT LINED AND COATED STEEL PIPE
CD	CEILING DIFFUSER
CEM	CEMENT
CF	CUBIC FOOT
CFH	CUBIC FOOT PER HOUR
CFM	CUBIC FOOT PER MINUTE
CFS	CUBIC FOOT PER SECOND
C&G	CURB AND GUTTER
CHEM	CHEMICAL
CHKR	CHECKER
CIDM	CAST-IN-DRILLED HOLE
CIP	CAST IRON PIPE
CISP	CAST IRON SOIL PIPE
CJ	CONSTRUCTION JOINT
CKT	CIRCUIT
CL	CLEARANCE, CENTER LINE
CL2	CHLORINE
CLAR	CLARIFIER
CLG	CEILING
CMP	CORRUGATED METAL PIPE
CMPD GA	COMPOUND GAUGE
CLR	CLEAR
CMU	CONCRETE MASONRY UNIT
CMPA	CORRUGATED METAL PIPE ARCHED
CNCTRC	CONCENTRIC
CND	CONDUIT
CNDCT	CONDUCTOR
CNDS	CONDENSATE
CO2	CARBON DIOXIDE
CO	CLEANOUT
COTG	CLEANOUT TO GRADE
COD	CHEMICAL OXYGEN DEMAND
COL	COLUMN
COLL	COLLECTOR
COMPT	COMPARTMENT
CONC	CONCRETE
CONN	CONNECTION
CONST	CONSTRUCTION
CONT	CONTINUATION(OUS), CONTINUED
CP	CATHODIC PROTECTION
CPI	CONTROL POWER INTERLOCK
CPLG	COUPLING
CPT	CONTROL POWER TRANSFORMER
CPVC	CHLORINATED POLYVINYL CHLORIDE PIPE
CREJ	CORRUGATED RUBBER EXPANSION JOINT
CT	CURRENT TRANSFORMER, CATHODIC TEST STATION
CTR	CENTER
CTS	CATHODIC TEST STATION
CTSK	COUNTERSUNK
CU	CONTROL UNIT, COPPER PIPE
CV	CHECK VALVE, CONTROL VALVE
CW	COLD WATER
CYL	CYLINDER
DAF	DISSOLVED AIR FLOTATION
DBL	DOUBLE
DEG	DEGREE
DENS MTR	DENSITY METER
DET	DETAIL
DF	DOUGLAS FIR
DI	DROP INLET
DIA	DIAMETER
DIAG	DIAGRAM
DIAPH V	DIAPHRAGM VALVE
DIFF	DIFFERENTIAL
DIP	DUCTILE IRON PIPE
DISCH (DIS)	DISCHARGE
DIZ	DIONIZED WATER
DMPR MOT	DAMPER MOTOR
DN	DOWN
DO	DISSOLVED OXYGEN
DP	DEDUCT POINT
DR	DRAIN
DS	DIGESTED SLUDGE, DOWNSPOUT
DT	DRIP TRAP
DUP	DURIRON PIPE
DV	DIAPHRAGM VALVE
DW	DISHWASHER
DWG	DRAWING
EA	EACH
EB	EXPANSION BOLT
EC	END OF CURVE
ECC	ECCENTRIC
EE	EACH END
EF	EACH FACE
EFL	EFFLUENT
EL	ELEVATION
ELB	ELBOW
ELCS	EPOXY LINED AND COATED STEEL PIPE
ELECT	ELECTRIC(AL)
EMER	EMERGENCY
EP	EDGE OF PAVEMENT
EPS	EFFLUENT PUMP STATION
EQ	EQUAL
EQUIP	EQUIPMENT
ESA	ENVIRONMENTALLY SENSITIVE AREA
ESB	EMERGENCY STORAGE BASIN
EW	EACH WAY
EWC	ELECTRIC WATER COOLER
EX	EXTRA
EXH	EXHAUST
EXH FN	EXHAUST FAN
EXP	EXPOSED, EXPANSION
EXP JT	EXPANSION JOINT
EXIST (E)	EXISTING
EXT	EXTERIOR
FA	FRESH AIR
FAB	FABRICATED(D)(TION)
FAI	FRESH AIR INTAKE
FB	FLAT BAR, FLOOR BEAM, FACE OF BLOCK
FC	FLEXIBLE COUPLING
FCA	FLANGED COUPLING ADAPTER
FCO	FLOOR CLEANOUT
FCR	FINE CRUSHED ROCK
FD	FLOOR DRAIN
FDR	FEEDER
FE	METER(ELEMENT)
FES	FLARED END SECTION
FF	FILTER FEED, FINISHED FLOOR
F/G	FIBERGLASS
FG	FLAP GATE, FINISH GRADE
FH	FIRE HYDRANT
FIN	FINISH(ED)
FL	FLOOR, FLOW LINE
FLEX	FLEXIBLE
FLG	FLANGE(D)
FL CO	FLOOR CLEANOUT
FLH	FLAT HEAD
FLW	FLAT WASHER
FM	FORCE MAIN
FME	FLOW METER
FPM	FEET PER MINUTE
FPS	FEET PER SECOND
FRC	FLEXIBLE RUBBER COUPLING
FRP	FIBERGLASS REINFORCED PLASTIC
FS	FAR SIDE
FST	FASTENER (S)
FT	FEET, FOOT
FTG	FOOTING
FUT	FUTURE
G	GAS
G&P	GRADING AND PAVING
GA	GAUGE
GAF	GALVANIZE AFTER FABRICATION
GAL	GALLON
GALV	GALVANIZED
GC	GROOVED COUPLING
GENL	GENERAL
GL	GLASS
GLCIP	GLASS LINED CAST IRON PIPE
GLV	GLOBE VALVE
GND	GROUND
GPD	GALLONS PER DAY
GPH	GALLONS PER HOUR
GPM	GALLONS PER MINUTE
GR	GRADE
GRDR	GRINDER
GS	GALVANIZED STEEL
GSB/S	GALVANIZED STEEL BOLT/EXP SHIELD
GSKT	GASKET
GSP	GALVANIZED STEEL PIPE
GTV	GATE VALVE
GTV & B	GATE VALVE AND VALVE BOX
GWB	GYPSUM WALL BOARD
H	HEIGHT
H/A	HAND-AUTOMATIC
HC	HOLLOW CORE
HD	HEAVY DUTY
HDOT	HEAVY DUTY OIL TIGHT
HDR	HEADER
HDWD	HARDWOOD
HEX	HEXAGONAL
HGLV	HOSE GLOBE VALVE
HGR	HANGER
HGV	HOSE GATE VALVE
HHWL	HIGH HIGH WATER LEVEL
HM	HOLLOW METAL
HN	HEX NUT
HNDRL	HANDRAIL
HOA	HAND-OFF-AUTOMATIC
HORIZ	HORIZONTAL
HP	HORSEPOWER, HIGH PRESSURE
HR(S)	HOUR(S)
HS	HIGH STRENGTH, HEAVY STEEL
HSB	HIGH STRENGTH BOLT
HTR	HEATER
HV	HOSE VALVE, HOSE BIBB
H/V	HEATING AND VENTILATING
HWL	HIGH WATER LEVEL
HYD	HYDRAULIC
HZ	HERTZ(CYCLES PER SECOND)
ID	INSIDE DIAMETER
IE	INVERT ELEVATION
IF	INSIDE FACE
IJTS	INSULATED JOINT TEST STATION
IN	INCH
IND LP	INDICATING LAMP
INFL	INFLUENT
INST	INSTANTANEOUS
INSUL	INSULATED(ION)
INTLK	INTERLOCK
INTR	INTERIOR
INVT	INVERT
IP	IRON PIN
IPS	INFLUENT PUMP STATION
IT	INSTRUMENT TAP
J	JOIST
JB	JUNCTION BOX
JCT	JUNCTION
J HGR	JOIST HANGER
JT	JOINT
KG	KNIFE GATE
KSF	THOUSAND SQUARE FEET
KV	KILOVOLT
LAM	LAMINATED
LAT	LATERAL
LBS	POUNDS
LF	LENGTH FEET
LG	LONG
LI	LIFTING INSERT
LOS	LOCKOUT STOP
LP	LOW PRESSURE
LR	LONG RADIUS
LTG	LIGHTING
LV	LOW VOLTAGE, LINE VALVE
LVL	LEVEL
LVR	LOUVER
LWL	LOW WATER LEVEL
LWR	LOWER
MA	MILLIAMPERE
MAG	MAGNETIC
MAINT	MAINTENANCE
MAX	MAXIMUM
MBH	THOUSAND BTU'S PER HOUR
MBR	MEMBRANE SYSTEM
MBV	MOTORIZED BALL VALVE
MCC	MOTOR CONTROL CENTER
MCM	THOUSAND CIRCULAR MILS
MECH	MECHANICAL
MET	METAL
MFR	MANUFACTURER
MGD	MILLION GALLONS PER DAY
MG/L	MILLIGRAMS PER LITER
MH	MANHOLE
MI	MALLEABLE IRON
MIN	MINIMUM, MINUTE
MIR	MIRROR
MISC	MISCELLANEOUS
MJ	MECHANICAL JOINT
ML	MILLILITER, MIXED LIQUOR
MNL	MANUAL
MO	MOTOR OPERATOR
MOS	MOWING STRIP
MOT	MOTOR
MOV	MOTOR OPERATED VALVE
MM	MILLIMETER
MNTG	MOUNTING
MP	MATURATION POND
MPPS	MP PUMP STATION
MPN	MOST PROBABLE NUMBER
MS	METAL STUDS
MT	METAL THRESHOLD
MTD	MOUNTED
MV	MUD VALVE, MILLIVOLTS
MWS	MAXIMUM WATER SURFACE
MWL	MEAN WATER LEVEL
MX	AUXILLIARY RELAY
NA	NON-AUTOMATIC
NC	NORMALLY CLOSED
NFYD	NON FREEZE YARD DRAIN
NFYH	NON FREEZE YARD HYDRANT
NIC	NOT IN CONTRACT
NIS	NOT IN SERVICE
NO	NORMALLY OPEN, NUMBER
NPL	NAMPLATE
NPS	NON-PROJECTING STEM
NPSH	NET POSITIVE SUCTION HEAD
NRS	NON-RISING STEM
NTS	NOT TO SCALE
NV	NEEDLE VALVE
NWL	NORMAL WATER LEVEL
OA	OUTSIDE AIR
OC	ON CENTER
OD	OUTSIDE DIAMETER, OXIDATION DIAMETER
OF	OUTSIDE FACE
OPER	OPERATOR (ING)
OVLD	OVERLOAD
OPNG	OPENING
OPP	OPPOSITE
OX	OXIDATION
PB	PULL BOX
PBV	PLASTIC BALL VALVE
PC	PLAIN CONCRETE (NO REINFORCING)
PCHV	PINCH VALVE
PCMP	PERFORATED CORRUGATED METAL PIPE
PCV	PLASTIC CHECK VALVE
PEJ	PREMOLDED EXPANSION JOINT
PG	PRESSURE GAUGE (SEE DWG M21)
PH	PHASE, POST HYDRANT
PI	POINT OF INTERSECTION
PIT	PRESSURE INDICATING TRANSMITTER
PK	PEAK
PL	PLACES, PLATE, PROPERTY LINE
PLAC	PLASTIC LINED ASBESTOS CEMENT
PLSTC	PLASTIC
PLWD	PLYWOOD
PLYWD	PLYWOOD
PMS	PLANT MIX SURFACING
PNEU	PNEUMATIC
PNL	PANEL, PANEL BOARD
PP	POWER POLE, PIPE PENETRATION
PPLN	PIPELINE
PRCCP	PRESTRESSED CONCRETE CYLINDER PIPE
PREFAB	PREFABRICATED
PRESS	PRESSURE
PRFV	PRESSURE RELIEF VALVE
PRV	PRESSURE REGULATING (REDUCING) VALVE
PS	PRESSURE SWITCH, PIPE SUPPORT, PUMP STATION
PSF	POUNDS PER SQUARE FOOT
PSI	POUNDS PER SQUARE INCH
PSL	PIPE SLEEVE
PT	PLASTIC TUBING
PV	PLUG VALVE
PVC	POLYVINYL CHLORIDE (PIPE)
PVC-UVR	POLYVINYL CHLORIDE PIPE-UV RESISTANT
PVT	PAVEMENT
QCPLG	QUICK COUPLING
R	RISER, RADIUS
RA	RETURN AIR
RAD	RADIUS
RB	REDUCTION BRASS
RBO	REMOVED BY OTHERS (TO BE)
RC	REINFORCED CONCRETE
RCDR	RECORDER
RCP	REINFORCED CONCRETE PIPE
RCPT	RECEPTACLE
RD	ROOF DRAIN
RECOM	RECOMMEND (ATION)
RED	REDUCER
REFRD	REFRIGERATED
REHAB	REHABILITATE
REINF	REINFORCE (ING)
REM	REMOVABLE
REQMT	REQUIREMENT (S)
REQ'D	REQUIRED
REV	REVISED (IONS)
RFRO	ROUND FLANGE ROUND OPENING
RGS	RIGID GALVANIZED STEEL
RM	ROOM
RMV	REMOVE
RPM	REVOLUTIONS PER MINUTE
RR	RAILROAD
R&R	REMOVE AND RELOCATE (REINSTALL)
R&S	REMOVE AND SAVE (SALVAGE)
RST	REINFORCING STEEL
RUB	RUBBER
RV	RELIEF VALVE
R/W	RIGHT OF WAY
R&W	REMOVE AND WASTE
RWD	REDWOOD
RWL	RAIN WATER LEADER
RWP	RAIN WATER PIPE
RX	AUXILIARY RELAY
S	START CONTACTOR
SA	SUPPLY AIR, SERVICE AIR
SARV	SEWAGE AIR RELEASE VALVE
SAVV	SEWAGE AIR VACUUM VALVE
SCAV	SEWAGE COMBINATION AIR VALVE
SCFM	STANDARD CFM
SCHED	SCHEDULE
SCV	SPLIT CHECK VALVE
SD	SPLITTER DAMPER, SOAP DISPENSER
SE	SEWER EASEMENT
SEC	SECOND
SECT	SECTION
SEL	SELECTOR
SFRO	SQUARE FLANGE ROUND OPENING
SFSO	SQUARE FLANGE SQUARE OPENING
SH	SHEET
SIM	SIMILAR
SLS	SARAN LINED STEEL
SO2	SULFUR DIOXIDE
SOLV	SOLENOID VALVE
SP	STRUCTURAL PLYWOOD, SLIDE GATE
S&P	SHELF AND POLE
SPEC	SPECIFICATIONS
SPRT	SUPPORT
SQ	SQUARE
SR	SHORT RADIUS
SRT	SOLIDS RETENTION TIME
SS	SERVICE SINK
SSB	SLUDGE STORAGE BASIN
SSB/S	STAINLESS STEEL BOLT W/ EXP SHIELD
S&S	STUB AND STOPPER
SST	STAINLESS STEEL
ST	START
STA	STATION
STD	STANDARD, STORM DRAIN
STIFF	STIFFENER
STL	STEEL
ST PR	STATIC PRESSURE
STR	STRAINER
STRG	STRONG
STRL	STRUCTURAL
SUC	SUCTION
SURF	SURFACE
SW	SWITCH
SWBD	SWITCHBOARD
SWD	SIDE WATER DEPTH
SX	AUXILIARY RELAY TO S
T&B	TOP AND BOTTOM
TB	THRUST BLOCK
TBA	TO BE ABANDONED
TC	TIME CLOSING CONTACT
TD	TANK DRAIN, TOWEL DISPENSER
TDH	TOTAL DYNAMIC HEAD
TE	TOTALLY ENCLOSED
TEL	TELEPHONE
TEMP	TEMPERATURE
T&G	TONGUE AND GROOVE
TH	TOILET PAPER HOLDER
THERM	THERMOMETER
THK	THICK
THY	THYRITE PROTECTOR
TIM	TIME METER - HOURS
TO	TIME OPENING
TOC	TOTAL ORGANIC CARBON, TOP OF CONCRETE
TOW	TOP OF WALL
TPI	TEST POWER INTERLOCK
TPU	TIME PICK-UP
TR	TIMING RELAY
TRANS	TRANSITION
TRD	STAIR TREAD
TS	STRUCTURAL TUBE
TSB	TERTIARY STORAGE BASINS
TSS	TOTAL SUSPENDED SOLIDS
TV	THERMOSTATIC VALVE
TYP	TYPICAL
UGND	UNDERGROUND
UHMW	ULTRA HIGH MOLECULAR WEIGHT
UN	UNION
UNO	UNLESS NOTED OTHERWISE
U/P	UTILITY POLE
UR	URNAL
V	VALVE, VENT, VOLTS
VAC	VACUUM, VOLTS, ALT CURRENT
VAR	VARIES (ABLE)
VAT	VINYL ASBESTOS TILE
VB	VALVE BOX, VACUUM BREAKER
VCP	VITRIFIED CLAY PIPE
VDC	VOLTS DIRECT CURRENT
VERT	VERTICAL
VG	VACUUM GAUGE
VSW	VACUUM SWITCH
VT	VINYL TILE
VTR	VENT THROUGH ROOF
W	WATTS, WIDTH
W/	WITH
WA	WEDGE ANCHOR
WC	WATER CLOSET, WATER COLUMN
WCO	WALL CLEANOUT
WD	WOOD
WG	WASTE GAS
WH	WATER HEATER, WHARF HYDRANT
WI	WROUGHT IRON
WO	WITHOUT
WP	WEATHERPROOF
WPJ	WEAKENED PLANE JOINT
WS	WATER SURFACE
WSP	WELDED STEEL PIPE
WSTP	WATERSTOP
WTRPRF	WATERPROOF
WTRTT	WATERTIGHT
WWF	WELDED WIRE FABRIC
WWTP	WASTEWATER TREATMENT PLANT
WTHPRF	WEATHERPROOF
WWTRF	WASTEWATER TREATMENT AND RECLAMNTION FACILITY
XFMR	TRANSFORMER
YCO	YARD CLEANOUT
ZOP	ZINC ORTHOPHOSPHATE

Revision	By	Appd.	YY.MM.DD

Issued	By	Appd	YY.MM.DD
ISSUED FOR BID	BPC	SLB	24.03.15

Permit/Seal

REGISTERED PROFESSIONAL ENGINEER BETH P. COHEN No. C70184 CIVIL STATE OF CALIFORNIA
Exp.9/30/2024

2024.03.15

Consultant

Stantec

Stantec Consulting Services Inc.
2250 Douglas Blvd., Suite 260
Roseville CA 95661
Tel:(916) 773-8100
www.stantec.com

Copyright Reserved
The Contractor shall verify and be responsible for all dimensions. DO NOT scale the drawing - any errors or omissions shall be reported to Stantec without delay.
The Copyrights to all designs and drawings are the property of Stantec. Reproduction or use for any purpose other than that authorized by Stantec is forbidden.

Client/Project Logo

COUNTY OF EL DORADO
COMMUNITY DEVELOPMENT SERVICES
ENVIRONMENTAL
MANAGEMENT DEPARTMENT
2850 FAIRLANE COURT
PLACERVILLE, CALIFORNIA 95667

Client/Project

County of El Dorado
UNION MINE
WASTEWATER TREATMENT PLANT
HEADWORKS
County of El Dorado, California

File Name: 032224-G005	ASB	BPC	SLB	24.03.15
	Dwn.	Dsgn.	Chkd.	YY.MM.DD

Title

ABBREVIATIONS

Project No.	Scale
184032224	NONE
Revision	Sheet
0	5 of 35
Drawing No.	
G005	

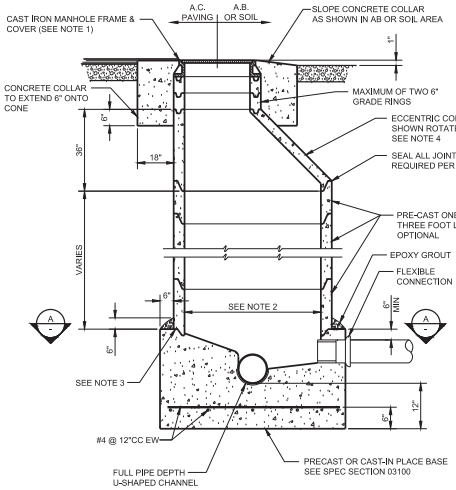

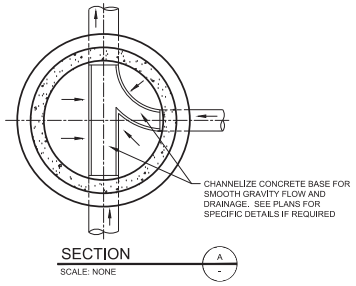

NOTES:

1. UNLESS OTHERWISE SPECIFIED, 24"Ø ON 48"Ø MANHOLE, 30"Ø ON 60"Ø MANHOLE CAST IRON MANHOLE FRAME & COVER TOP OF MANHOLE FRAME AND CONCRETE COLLAR TO BE SET 1/4" BELOW FINISHED AC SURFACE. CONCRETE SHALL BE CLASS A IN ACCORDANCE WITH THE SPECIFICATIONS SET FRAME AND COVER IN GROUT.
2. UNLESS NOTED OTHERWISE, 48"Ø FOR 6'-12", 60"Ø FOR 15'-36".
3. CONTRACTOR SHALL FORM GROOVE IN BASE WITH MANUFACTURER'S IMPRESSION RING.
4. LOCATE COVER OVER DOWNSTREAM SIDE OF MANHOLE UNLESS NOTED OTHERWISE.

MANHOLE

SCALE: NONE — C101 TYP

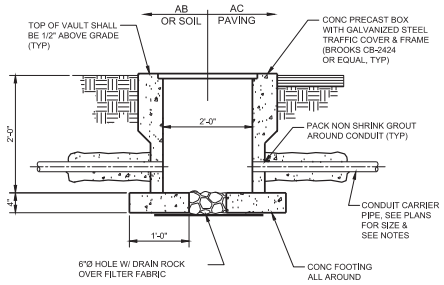

NOTES:

1. CONDUIT SHALL HAVE A NOMINAL COVER OF 18".
2. CONDUITS SHALL BE CONCRETE ENCASED CONTINUOUSLY IN 4" MINIMUM OF CLASS "C" CONCRETE.
3. CONDUIT SHALL NOT SAG MORE THAN 1" PER 100' AND BE SUPPORTED WITH PIPE SUPPORTS (UNDERGROUND DEVICES, INC., MODEL 2W20 OR EQUAL).
4. INSULATE ALL PIPES AND BOXES, IN ACCORDANCE WITH THE SPECIFICATIONS.

CHEMICAL PULL BOX

SCALE: NONE — C115 TYP

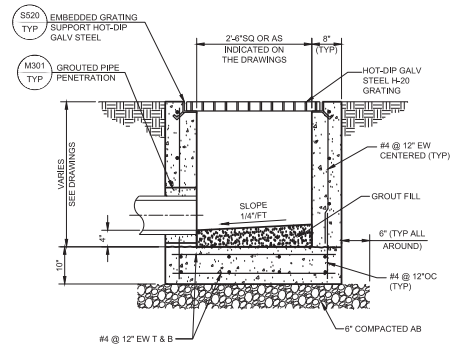

NOTES:

1. TOP OF DROP INLET 1/4" BELOW FINISH GRADE UNLESS INDICATED OTHERWISE ON THE DRAWINGS.
2. DROP INLET MAY BE PRECAST STRUCTURE WITH ENGINEERS APPROVAL.

STANDARD DROP INLET

SCALE: NONE — C120 TYP

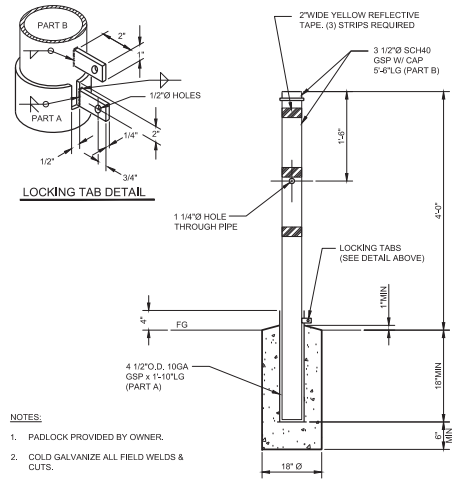

NOTES:

1. PADLOCK PROVIDED BY OWNER.
2. COLD GALVANIZE ALL FIELD WELDS & CUTS.

REMOVABLE POST

SCALE: NONE — C206 TYP

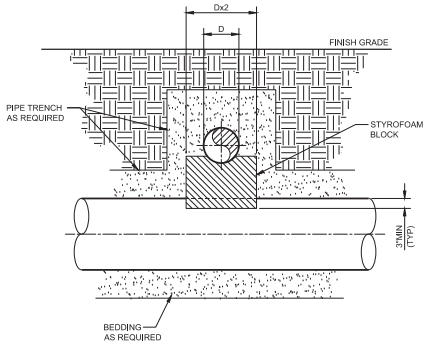

PIPE CROSSING WITH STYROFOAM BLOCK

SCALE: NONE — C307 TYP

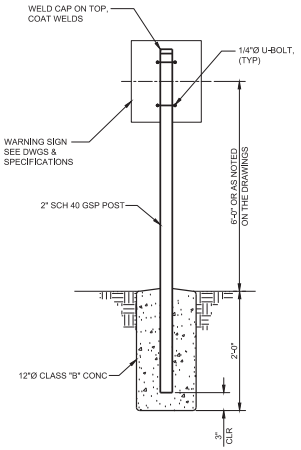

WARNING SIGN

SCALE: NONE — C250 TYP

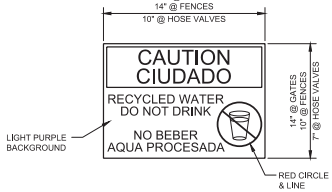

NOTE:

1. INSTALL 20"x14" PLASTIC SIGNS (SETON OR EQUAL) ON ALL GATES
2. INSTALL 14"x10" PLASTIC SIGNS (SETON OR EQUAL) ON FENCES AT 300' INTERVALS ON PERIMETER FENCING AND 500' ON INTERIOR FENCING.
3. INSTALL 10"x 7" PLASTIC SIGN (SETON OR EQUAL) ON 1/8" THICK ALUMINUM BACKING PLATE AT HOSE VALVES. CORNERS ON BACKING LATE SHALL BE ROUNDED, 1/2" RADIUS.

NON-POTABLE WATER WARNING SIGN

SCALE: NONE — C251 TYP

Revision	By	Appd.	YY.MM.DD
ISSUED FOR BID	BPC	SLB	24.03.15
Issued	By	Appd	YY.MM.DD

Permit/Seal

REGISTERED PROFESSIONAL ENGINEER — BRIAN P. COREN — No. C70184 — Exp 9/30/2024 — CIVIL — STATE OF CALIFORNIA

2024.03.15

Consultant

Stantec

Stantec Consulting Services Inc.
2250 Douglas Blvd., Suite 260
Roseville CA 95661
Tel:(916) 773-8100
www.stantec.com

Copyright Reserved
The Contractor shall verify and be responsible for all dimensions. DO NOT scale the drawing - any errors or omissions shall be reported to Stantec without delay. The Copyrights to all designs and drawings are the property of Stantec. Reproduction or use for any purpose other than that authorized by Stantec is forbidden.

Client/Project Logo

COUNTY OF EL DORADO
COMMUNITY DEVELOPMENT SERVICES
ENVIRONMENTAL MANAGEMENT DEPARTMENT
2850 FAIRLANE COURT
PLACERVILLE, CALIFORNIA 95667

Client/Project

County of El Dorado
UNION MINE
WASTEWATER TREATMENT PLANT
HEADWORKS
County of El Dorado, California

File Name: 032224-C001 TO C003

ASB	BPC	SLB	24.03.15
Dwn.	Dsgn.	Chkd.	YY.MM.DD

Title

TYPICAL CIVIL DETAILS

Project No.	Scale
184032224	AS SHOWN
Revision	Sheet / Drawing No.
0	6 of 35 — C001

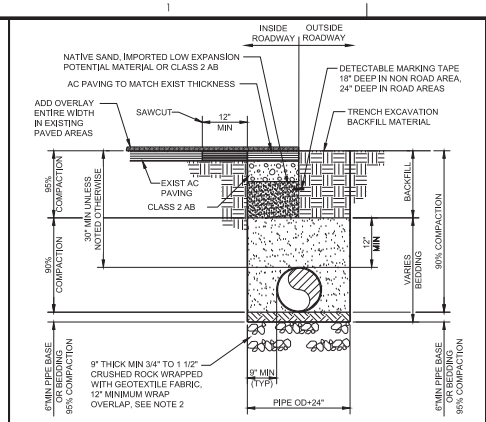

NOTES:

1. TRENCH SHEILD SHALL NOT DISTURB BEDDING BELOW TOP OF PIPE, TRENCH SHALL BE "BENCHED" FOR SHEILD.
2. TO BE USED WHERE TRENCH BOTTOMS ARE DISTURBED BY CONTRACTOR'S TRENCHING OR PIPE INSTALLATION PROCEDURES OR WHERE EXCAVATION OCCURS BELOW GROUND WATER TABLE.

TYPICAL PIPE TRENCH SECTION

SCALE: NONE — C301 TYP

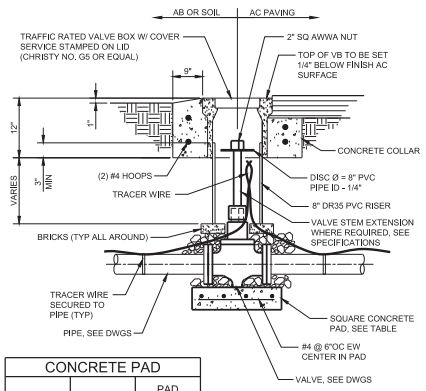

CONCRETE PAD		
VALVE SIZE	PAD SIZE	PAD THICKNESS
3"-16"	24"	6"
18"-30"	36"	6"
36"-48"	48"	8"
54"-60"	60"	8"

TYPICAL BURIED VALVE

SCALE: NONE — C500 TYP

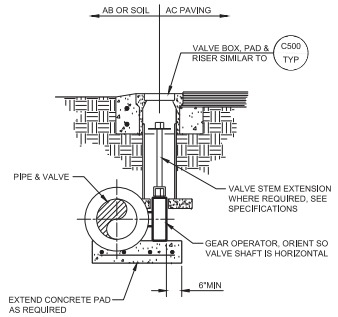

BURIED VALVE WITH GEAR OPERATOR

SCALE: NONE — C501 TYP

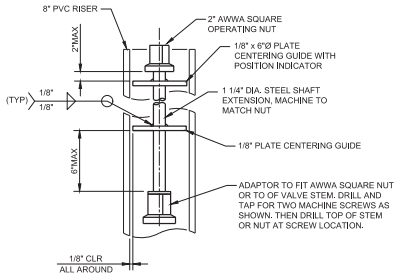

OPERATING NUT EXTENSION

SCALE: NONE — C502 TYP

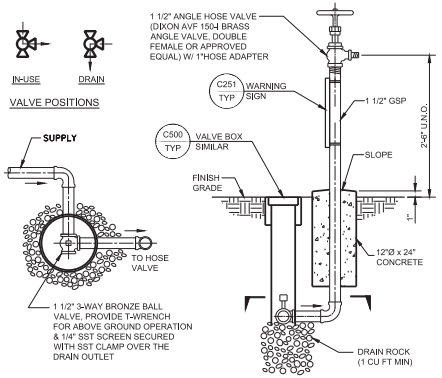

NOTES:

1. HOSE VALVE AND SIGN SHALL BE MOUNTED TO PERMIT UNOBSTRUCTED VIEWING OF SIGN AND ACCESS TO VALVE.
2. INSTALL HOSE RACK PER TYPICAL DETAIL M630 AT EACH HOSE VALVE.
3. PAINT VALVE & EXPOSED PIPE PER SPECIFICATIONS AFTER INSTALLATION.

1-1/2" NON-FREEZE YARD HYDRANT NON-POTABLE WATER

SCALE: NONE — C525 TYP

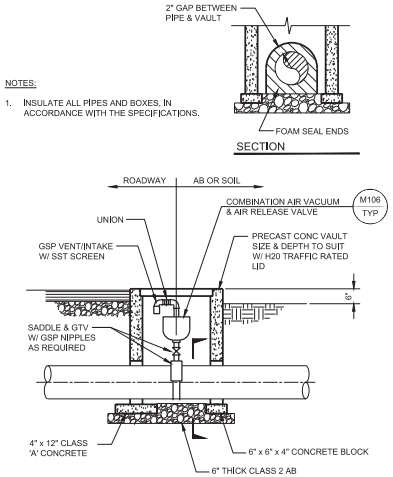

NOTES:

1. INSULATE ALL PIPES AND BOXES, IN ACCORDANCE WITH THE SPECIFICATIONS.

BURIED VACUUM & AIR RELEASE VALVE

SCALE: NONE — C528 TYP

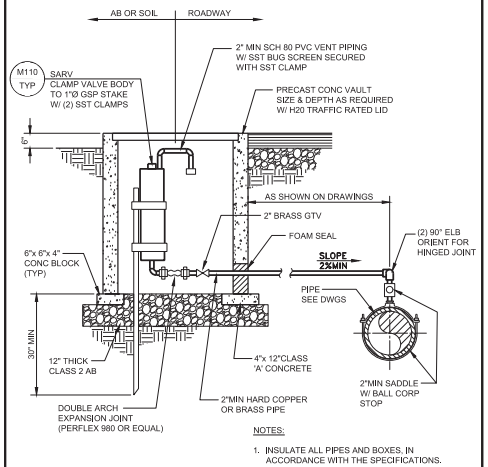

NOTES:

1. INSULATE ALL PIPES AND BOXES, IN ACCORDANCE WITH THE SPECIFICATIONS.

BURIED SEWAGE AIR RELEASE VALVE

SCALE: NONE — C529 TYP

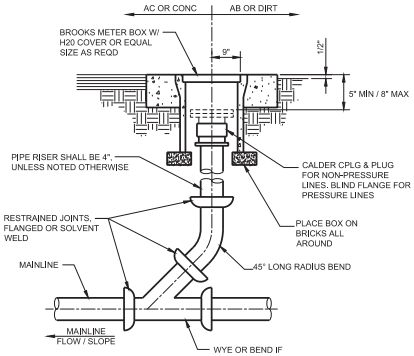

CLEANOUT

SCALE: NONE — C550 TYP

Revision	By	Appd.	YY.MM.DD

Issued	By	Appd	YY.MM.DD
ISSUED FOR BID	BPC	SLB	24.03.15

Permit/Seal

REGISTERED PROFESSIONAL ENGINEER — BRIAN P. COHEN — No. C70184 — EXP. 9/30/2024 — CIVIL — STATE OF CALIFORNIA

2024.03.15

Consultant

Stantec

Stantec Consulting Services Inc.
2250 Douglas Blvd., Suite 260
Roseville CA 95661
Tel:(916) 773-8100
www.stantec.com

Copyright Reserved
The Contractor shall verify and be responsible for all dimensions. DO NOT scale the drawing - any errors or omissions shall be reported to Stantec without delay. The Copyrights to all designs and drawings are the property of Stantec. Reproduction or use for any purpose other than that authorized by Stantec is forbidden.

Client/Project Logo

COUNTY OF EL DORADO
COMMUNITY DEVELOPMENT SERVICES
ENVIRONMENTAL
MANAGEMENT DEPARTMENT
2850 FAIRLANE COURT
PLACERVILLE, CALIFORNIA 95667

Client/Project

County of El Dorado
UNION MINE
WASTEWATER TREATMENT PLANT
HEADWORKS
County of El Dorado, California

File Name: 032224-C001 TO C003

ASB	BPC	SLB	24.03.15
Dwn.	Dsgn.	Chkd.	YY.MM.DD

Title

TYPICAL CIVIL DETAILS

Project No.	Scale
184032224	AS SHOWN
Revision	Sheet
0	7 of 35

Drawing No.

C002

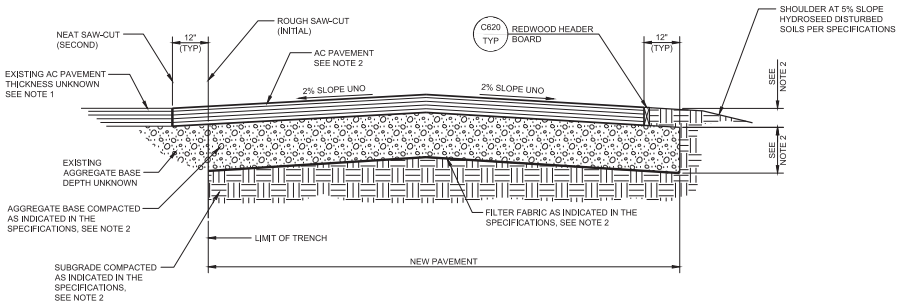

NOTES:

1. FOG SEAL SHALL EXTEND 2'-0" ONTO EXISTING PAVEMENT.
2. FOR THICKNESS OF NEW AB & AC AND COMPACTION REQUIREMENTS, SEE SPEC SECTION 02513.

ASPHALT CONCRETE ROADWAY

SCALE: NONE — C600 TYP

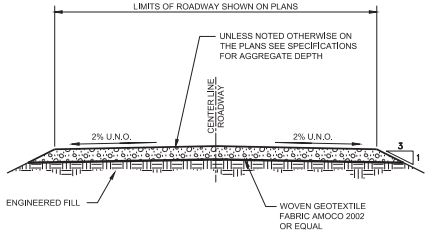

AGGREGATE BASE ROADWAY

SCALE: NONE — C605 TYP

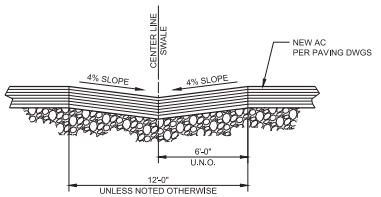

AC ROADWAY SWALE

SCALE: NONE — C610 TYP

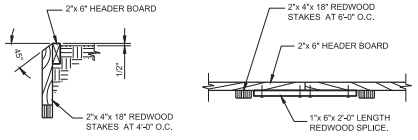

SECTION AT LANDSCAPED AREA

SPLICE DETAIL PLAN

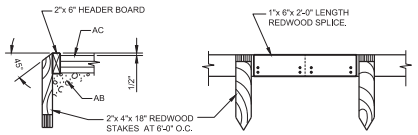

SECTION AT PAVED AREA

SPLICE DETAIL ELEVATION

HEADER BOARD NOTES:

1. INSTALL ALL STAKES AND SPLICES ON PLANTING SIDE OF HEADER BOARD.
2. ALL FASTENERS SHALL BE GALVANIZED WOODSCREWS.
3. ALL HEADER BOARD LUMBER SHALL BE COMMINGLED RECYCLED PLASTIC LUMBER. ALL STAKE AND SPLICE LUMBER SHALL BE REDWOOD, ROUGH CONSTRUCTION HEART GRADE IN ACCORDANCE TO CALIFORNIA REDWOOD ASSOCIATION GRADING RULES.

HEADER BOARD - RECYCLED PLASTIC

SCALE: NONE — C621 TYP

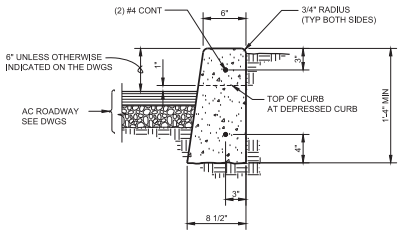

NOTES:

1. CURB SHALL BE FINISHED ON TOP, 8" DOWN FRONT FACE, AND 2" DOWN BACK.
2. EXPANSION JOINTS SHALL BE PLACED AT END OF CONCRETE PLACEMENT, AT POINTS OF CURVATURE, BOTH SIDES OF DRIVEWAYS AND WALKWAYS, CURB RETURNS, STRUCTURES, AND AT MAXIMUM DISTANCE OF 30 FEET. EXPANSION JOINTS SHALL BE 3/4" THICK W/ 1/4" RADIUS EDGES AT BOTH SIDES OF JOINT. USE BITUMINOUS EXPANSION JOINT MATERIAL.
3. REINFORCING STEEL SHALL NOT PASS THROUGH EXPANSION JOINTS.
4. 1" DEEP CONTROL JOINT W/ 1/4" RADIUS EDGES ON BOTH SIDES OF JOINT AT 15 FEET OC.
5. CURB SHALL BE DEPRESSED FOR DRIVEWAYS, ROADWAYS, SIDEWALKS FOR HANDICAPPED ACCESS AND WHERE INDICATED ON THE DRAWINGS.

CONCRETE CURB

SCALE: NONE — C630 TYP

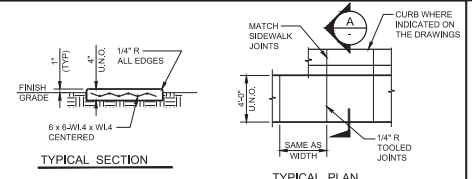

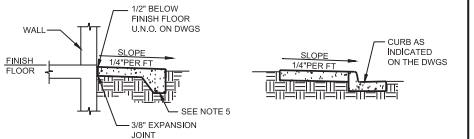

NOTES:

1. EXPANSION JOINTS SHALL BE INSTALLED AT END OF CONCRETE PLACEMENT, AT POINTS OF CURVATURE, AT STRUCTURES, AND AT MAXIMUM DISTANCE NOT TO EXCEED 100 FEET. EXPANSION JOINTS SHALL BE 3/4" THICK. TOOL EDGES 1/4" RADIUS.
2. CONTRACTION JOINTS SHALL BE INSTALLED AT A MAXIMUM SPACING OF 10 FT.
3. ELEVATIONS SHALL BE AS INDICATED ON THE DRAWINGS.
4. PROVIDE LIGHT BROOM SURFACE FINISH.
5. THICKNESS VARIES 8"-12" AS REQUIRED FOR STEP.

CONCRETE SIDEWALK

SCALE: NONE — C645 TYP

Revision	By	Appd.	YY.MM.DD

Issued	By	Appd	YY.MM.DD
ISSUED FOR BID	BPC	SLB	24.03.15

Permit/Seal

REGISTERED PROFESSIONAL ENGINEER — BETH P. COOPER — No. C70184 — Exp.9/30/2024 — CIVIL — STATE OF CALIFORNIA

2024.03.15

Consultant

Stantec

Stantec Consulting Services Inc.
2250 Douglas Blvd., Suite 260
Roseville CA 95661
Tel:(916) 773-8100
www.stantec.com

Copyright Reserved
The Contractor shall verify and be responsible for all dimensions. DO NOT scale the drawing - any errors or omissions shall be reported to Stantec without delay. The Copyrights to all designs and drawings are the property of Stantec. Reproduction or use for any purpose other than that authorized by Stantec is forbidden.

Client/Project Logo

COUNTY OF EL DORADO
COMMUNITY DEVELOPMENT SERVICES
ENVIRONMENTAL
MANAGEMENT DEPARTMENT
2850 FAIRLANE COURT
PLACERVILLE, CALIFORNIA 95667

Client/Project

County of El Dorado
UNION MINE
WASTEWATER TREATMENT PLANT
HEADWORKS
County of El Dorado, California

File Name: 032224-C001 TO C003

Dwn.	Dsgn.	Chkd.	YY.MM.DD
ASB	BPC	SLB	24.03.15

Title

TYPICAL CIVIL DETAILS

Project No. 184032224
Scale AS SHOWN
Revision 0
Sheet 8 of 35
Drawing No. C003

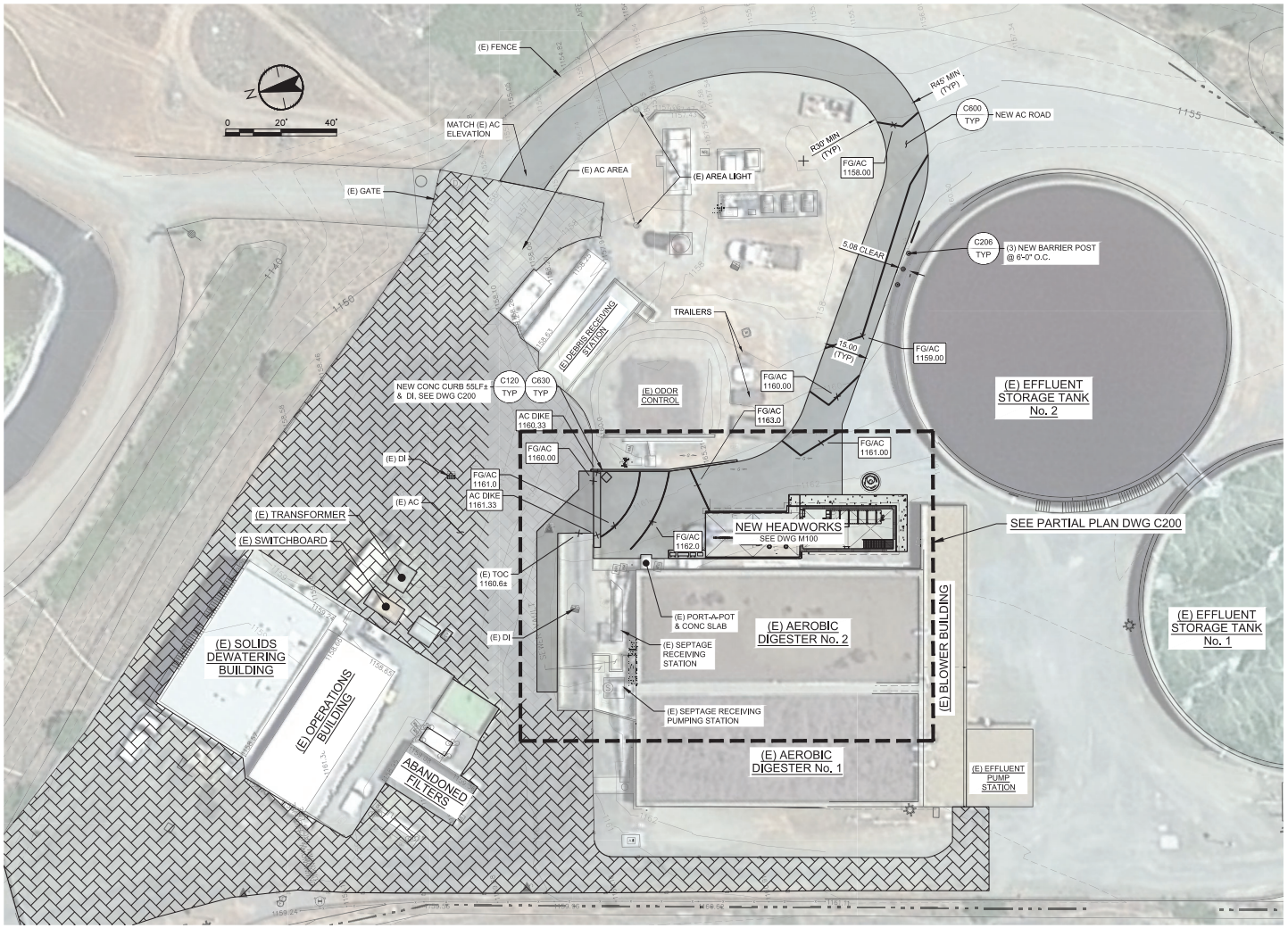

LEGEND:

EXISTING AC (2.5" DEPTH).....

NEW AC (3" AC / 6" AB).....

NEW CONCRETE WALKWAY.....

NOTES:

1. DURING CONSTRUCTION PROTECT IN PLACE ALL EXISTING EQUIPMENT AND INFRASTRUCTURE.

Revision	By	Appd.	YY.MM.DD
ISSUED FOR BID	BPC	SLB	24.03.15
Issued	By	Appd	YY.MM.DD

Permit/Seal

REGISTERED PROFESSIONAL ENGINEER BETH P. COHEN No. C70184 CIVIL STATE OF CALIFORNIA 6/30/2024

2024.03.15

Consultant

Stantec

Stantec Consulting Services Inc.
2250 Douglas Blvd., Suite 260
Roseville CA 95661
Tel:(916) 773-8100
www.stantec.com

Copyright Reserved
The Contractor shall verify and be responsible for all dimensions. DO NOT scale the drawing - any errors or omissions shall be reported to Stantec without delay. The Copyrights to all designs and drawings are the property of Stantec. Reproduction or use for any purpose other than that authorized by Stantec is forbidden.

Client/Project Logo

COUNTY OF EL DORADO
COMMUNITY DEVELOPMENT SERVICES
ENVIRONMENTAL
MANAGEMENT DEPARTMENT
2850 FAIRLANE COURT
PLACERVILLE, CALIFORNIA 95667

Client/Project

County of El Dorado

UNION MINE
WASTEWATER TREATMENT PLANT
HEADWORKS

County of El Dorado, California

File Name: 032224-C100 & C200 | ASB Dwn. | BPC Dsgn. | SLB Chkd. | 24.03.15 YY.MM.DD

Title

WASTEWATER TREATMENT PLANT
GRADING AND PAVING PLAN

Project No.	Scale
184032224	1" = 20'
Revision	Sheet
0	9 of 35

Drawing No.

C100

NOTES:

1. DURING CONSTRUCTION PROTECT IN PLACE ALL EXISTING EQUIPMENT AND INFRASTRUCTURE.

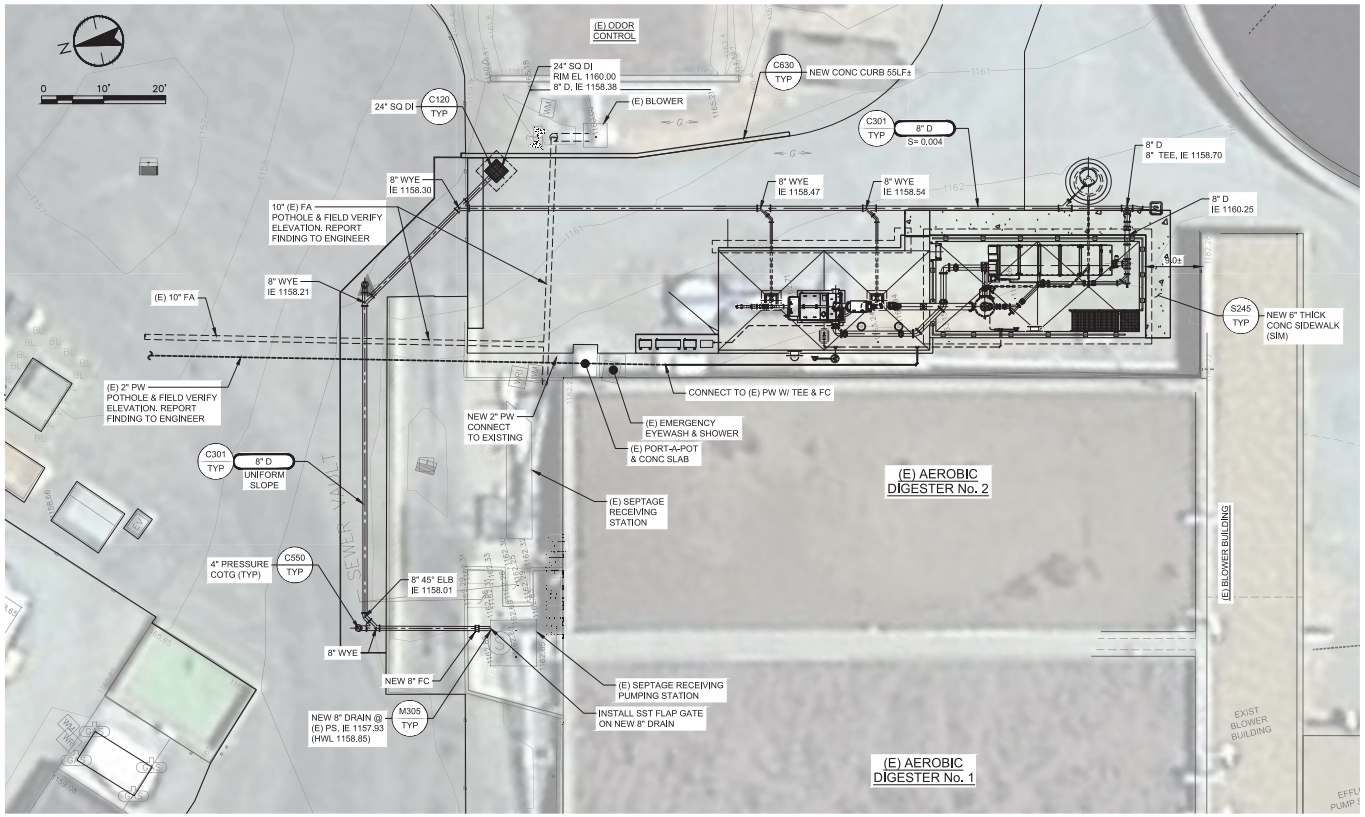

Revision	By	Appd.	YY.MM.DD

Issued	By	Appd	YY.MM.DD
ISSUED FOR BID	BPC	SLB	24.03.15

Permit/Seal

REGISTERED PROFESSIONAL ENGINEER BETH P. COHEN No. C70184 CIVIL STATE OF CALIFORNIA 09/30/2024

2024.03.15

Consultant

Stantec

Stantec Consulting Services Inc.
2250 Douglas Blvd., Suite 260
Roseville CA 95661
Tel:(916) 773-8100
www.stantec.com

Copyright Reserved
The Contractor shall verify and be responsible for all dimensions. DO NOT scale the drawing - any errors or omissions shall be reported to Stantec without delay. The Copyrights to all designs and drawings are the property of Stantec. Reproduction or use for any purpose other than that authorized by Stantec is forbidden.

Client/Project Logo

COUNTY OF EL DORADO
COMMUNITY DEVELOPMENT SERVICES
ENVIRONMENTAL
MANAGEMENT DEPARTMENT
2850 FAIRLANE COURT
PLACERVILLE, CALIFORNIA 95667

Client/Project

County of El Dorado

UNION MINE
WASTEWATER TREATMENT PLANT
HEADWORKS
County of El Dorado, California

File Name: 032224-C100 & C200 | ASB Dwn. | BPC Dsgn. | SLB Chkd. | 24.03.15 YY.MM.DD

Title

NEW HEADWORKS
PARTIAL PIPING PLAN

Project No.	Scale
184032224	1" = 10'

Revision	Sheet	Drawing No.
0	10 of 35	C200

ABBREVIATIONS:

ADDL	ADDITIONAL
AB	AGGREGATE BASE, ANCHOR BOLT
AC	ASPHALT CONCRETE
ACP	ASBESTOS CEMENT PIPE
AL	ALUMINUM
ALT	ALTERNATE
APPROX	APPROXIMATE (LY)
ARCH	ARCHITECTURAL
@	AT
BETW	BETWEEN
BEV	BEVELED
BLKG	WOOD BLOCKING
BOT	BOTTOM
BRG	BEARING
BLDG	BUILDING
BF	BOTTOM OF FOOTING
B/W	BACK OF WALL
BIT CTD	BITUMINOUS COATED
CHK PL	CHECKERED PLATE
CLR	CLEAR
CL	CENTER LINE
CLSM	CONTROLLED LOW STRENGTH MATERIAL
CC	CENTER TO CENTER
CMU	CONCRETE MASONRY UNIT
COL	COLUMN
CONC	CONCRETE
CJ	CONSTRUCTION JOINT
CONT	CONTINUOUS
CT J	CONTROL JOINT
CR J	CONTRACTION JOINT
CIP	CAST-IN-PLACE
CIDH	CAST-IN-DRILLED-HOLE
CTR	CENTER (ED)
CG	CENTER OF GRAVITY
CONST	CONSTRUCTION
COORD	COORDINATE
CSK	COUNTER SINK
CAB	CRUSHED AGGREGATE BASE
CAP	CORRUGATED ALUMINUM PIPE
D	DEPTH
db	BAR DIAMETER
DF	DOUGLAS FIR
DEMO	DEMOLITION
DIA	DIAMETER
DIM	DIMENSION
DN	DOWN
DWG	DRAWING
DL	DEAD LOAD
DIST	DISTANCE
DD	DOWN DRAIN
DIAPH	DIAPHRAGM
DSA	DIVISION OF STATE ARCHITECT
EXIST, (E)	EXISTING
EA	EACH
EF	EACH FACE
EJ	EXPANSION JOINT
EL, ELEV	ELEVATION
EQ	EQUAL
EQUIP	EQUIPMENT
EXT	EXTERIOR
EMBED	EMBEDMENT
EN	EDGE NAILING
ES	EACH SIDE
EW	EACH WAY
ENGR	ENGINEER, ENGINEERING
EXC	EXCAVATION
EXP	EXPANSION
FAB	FABRICATE
F & I	FURNISH AND INSTALL
FB	FACE OF BLOCK
FC	FACE OF CONCRETE
FD	FLOOR DRAIN
FF	FINISHED FLOOR, FACE OF FRAMING
FDN	FOUNDATION
FG	FINISHED GRADE
FS	FINISHED SURFACE, FACE OF STUD
F/S	FAR SIDE
FLG	FLANGE
FN	FIELD NAILING
FTG	FOOTING
FW	FACE OF WALL
FT	FEET (FOOT)
GA	GAGE
GAF	GALVANIZE AFTER FABRICATION
GALV	GALVANIZED
GS	GALVANIZED STEEL
GR	GUARD RAILING, GRADE
GTR	GUTTER
GRTG	GRATING
GSP	GALVANIZED STEEL PIPE
H	HIGH OR HEIGHT
HA	HEADED ANCHOR
HR	HANDRAIL
HSB	HIGH STRENGTH BOLT
HORIZ	HORIZONTAL
HW	HEAD WALL
HS	HIGH STRENGTH

ABBREVIATIONS (Continued):

ID	INSIDE DIAMETER
INCL	INCLUDING
INSP	INSPECTION
INV	INVERT
IE	INVERT ELEVATION
IF	INSIDE FACE
IN	INCH
JT	JOINT
JCT	JUNCTION
KP	KICK PLATE
KIPS	KILO POUNDS
L	LENGTH
LS	LAG SCREW
LAT	LATERAL
LB	POUND
LF	LINEAR FOOT
LL	LIVE LOAD
LT	LEFT
LONG	LONGITUDE
LONGIT	LONGITUDINAL
LTS	LIME TREATED SOIL
MANUF	MANUFACTURER
MAX	MAXIMUM
MB	MACHINE BOLT
MECH	MECHANICAL
MIN	MINIMUM
MPH	MILES PER HOUR
MISC	MISCELLANEOUS
(N)	NEW
NS	NON-SHRINK
N/S	NEAR SIDE
NTS	NOT TO SCALE
NO., NOS	NUMBER, NUMBERS
OC	ON CENTER
OD	OUTSIDE DIAMETER
OF	OUTSIDE FACE
OG	ORIGINAL GROUND
OE	OUTER EDGE
OH	OVERHEAD, OPPOSITE HAND
OPNG	OPENING
OPP	OPPOSITE
O-O	OUT TO OUT
PVMT	PAVEMENT
PL	PLATE
PREFAB	PREFABRICATED
PSI	POUNDS PER SQUARE INCH
P/S	PRESTRESSED
R	RADIUS
REINF	REINFORCEMENT
RC	REINFORCED CONCRETE
RCB	REINFORCED CONCRETE BOX
RCE	REGISTERED CIVIL ENGINEER
RET	RETAINING
RT	RIGHT
REQD	REQUIRED
SEC	SECTION
SF	SQUARE FOOT
SIM	SIMILAR
SPEC	SPECIFICATIONS
SHT	SHEET
STR	STRUCTURE/STRUCTURAL
SG	SUBGRADE
STD	STANDARD
SOG	SLAB ON GRADE
SP	STRUCTURAL PLYWOOD
SS	STAINLESS STEEL
SSB	STAINLESS STEEL BOLT
ST	STEEL
STIFF	STIFFENER
STAG	STAGGERED
STIR	STIRRUPS
SQ	SQUARE
SYMM	SYMMETRICAL
T & B	TOP AND BOTTOM
TF	TOP OF FOOTING
TOB	TOP OF BLOCK
TOC	TOP OF CONCRETE
TOG	TOP OF GRATING
TOS	TOP OF STEEL
TS	TUBE STEEL
TOW	TOP OF WALL
TYP	TYPICAL
TEMP	TEMPORARY
UG	UNDER GROUND
UNO (UON)	UNLESS NOTED OTHERWISE
VERT	VERTICAL
VOL	VOLUME
W	WIDTH
WS	WATERSTOP
WP	WORKING POINT
WH	WELP HOLE
WM	WIRE MESH
WSP	WELDED STEEL PIPE
WWF	WELDED WIRE FABRIC
W/	WITH
W/O	WITHOUT

INSPECTION / OBSERVATION NOTES:

A. SPECIAL INSPECTIONS:

GENERAL: IN ADDITION TO THE INSPECTIONS REQUIRED BY 110 OF THE CURRENT CBC, THE OWNER SHALL EMPLOY A SPECIAL INSPECTOR DURING CONSTRUCTION ON THE FOLLOWING TYPES OF WORK. ALL INSPECTIONS SHALL BE PREFORMED IN ACCORDANCE WITH CHAPTER 17 OF THE CURRENT CBC. REFER TO CHAPTER 17 FOR ADDITIONAL REQUIREMENTS OF THE SPECIAL INSPECTOR.

☑ 1. CONCRETE: DURING THE TAKING OF TEST SPECIMENS AND PLACING OF ALL REINFORCED CONCRETE.

☑ 2. REINFORCING STEEL:
   a. DURING THE PLACING OF REINFORCING STEEL, FOR ALL STRUCTURAL CONCRETE
   b. DURING THE PLACEMENT OF ALL CONCRETE INSERTS.

☑ 3. WELDING: DURING ALL STRUCTURAL WELDING INCLUDING WELDING OF REINFORCING STEEL. SUBMIT FIELD WELDERS CERTIFICATE TO THE DSA APPROVED WELDING INSPECTOR FOR APPROVAL PRIOR TO THE START OF WELDING.

☑ 4. HIGH STRENGTH BOLTING: IN ACCORDANCE WITH CBC REQUIREMENTS.

☐ 5. STRUCTURAL MASONRY: IN ACCORDANCE WITH CBC REQUIREMENTS.

☐ 6. PILING, DRILLED PIERS AND CAISSIONS: DURING DRIVING AND TESTING OF PILES AND CONSTRUCTION OF CAST-IN-PLACE DRILLED PILES AND CAISSIONS.

☐ 7. SHOTCRETE: DURING THE TAKING OF TEST SPECIMENS AND PLACING OF SHOTCRETE PER CBC REQUIREMENTS.

☐ 8. GLULAM FABRICATION INSPECTION PER 2337A.1.

☑ 9. A REPRESENTATIVE OF THE CIVIL ENGINEER OF RECORD SHALL BE PRESENT DURING THE GRADING, EXCAVATION AND FOUNDATION CONSTRUCTION.

☑ 10. ADHESIVE ANCHOR INSTALLATION: PERFORM SPECIAL INSPECTION IN ACCORDANCE WITH THE REQUIREMENTS OF THE CBC. THE SPECIAL INSPECTOR MUST RECORD PRODUCT DESCRIPTION (INCLUDING PRODUCT NAME), ADHESIVE EXPIRATION DATE, CONCRETE TYPE AND STRENGTH, ANCHOR DIAMETER AND STEEL GRADE, COMPLIANCE OF DRILL BIT WITH THE ICC-ES REPORT, HOLE DIAMETER AND LOCATION, CLEANLINESS OF HOLE AND ANCHOR, ADHESIVE APPLICATION, AND ANCHOR EMBEDMENT. PERSONNEL USED FOR INSTALLATION SHALL BE CERTIFIED BY AN APPLICABLE CERTIFICATION PROGRAM PER ACI 318-19 SECTION 26.7.1(I).

B. STRUCTURAL OBSERVATIONS:

THE STRUCTURAL ENGINEER, OR REPRESENTATIVE OF THE STRUCTURAL ENGINEER, SHALL MAKE VISITS TO THE SITE TO OBSERVE REPRESENTATIVE LOCATIONS TO VERIFY COMPLIANCE WITH CURRENT CBC SECTION 1704.6 AND COMPLIANCE THE APPROVED STRUCTURAL PLANS, SPECIFICATIONS AND CHANGE ORDERS. THE OBSERVER SHALL SUBMIT A STATEMENT IN WRITING TO THE BUILDING OFFICIAL STATING THE SITE VISITS HAVE BEEN MADE AND THAT ANY DEFICIENCIES NOTED HAVE BEEN CORRECTED.

☑ 1. OBSERVE FOUNDATION EXCAVATIONS AND REINFORCEMENT PLACEMENT PRIOR TO THE PLACING OF CONCRETE. PROVIDE 48 HR. NOTICE.

☐ 2. OBSERVE EDGE NAILING ON PLYWOOD SHEAR WALLS AND ROOFS.

☐ 3. OBSERVE THE CONNECTION OF SEISMIC TIES, STRAPS AND CONNECTORS.

☑ 4. PERFORM ADDITIONAL OBSERVATIONS, IF REQUIRED IN THE OPINION OF THE STRUCTURAL ENGINEER.

GENERAL NOTES:

1. TYPICAL STRUCTURAL DETAILS AND NOTES SHALL APPLY TO ALL "S" SHEETS UNLESS OTHERWISE SHOWN OR NOTED ON PLANS.
2. DETAILS OF CONSTRUCTION NOT FULLY SHOWN SHALL BE OF THE SAME NATURE AS SHOWN FOR SIMILAR CONDITION.
3. CONSTRUCTION SHALL CONFORM TO ALL APPLICABLE CODES AND REGULATIONS.
4. PRIOR TO FABRICATION, SHOP DRAWINGS SHALL BE SUBMITTED FOR REVIEW BY THE ENGINEER ON ALL STRUCTURAL STEEL, METAL DECK, STRUCTURAL ALUMINUM, REINFORCING STEEL, CONST. JT. LAYOUT AND CONCRETE MIX DESIGN. SHOP DRAWINGS: CONTRACTOR AGREES THAT SHOP DRAWING SUBMITTALS PROCESSED BY THE ENGINEER ARE NOT CHANGE ORDERS AND THAT THE PURPOSE OF SHOP DRAWING SUBMITTALS BY THE CONTRACTOR IS TO DEMONSTRATE TO THE ENGINEER THAT THE CONTRACTOR UNDERSTANDS THE DESIGN CONCEPT BY INDICATING WHICH MATERIAL HE INTENDS TO FURNISH AND INSTALL AND BY DETAILING THE FABRICATION AND INSTALLATION METHODS HE INTENDS TO USE.
5. SAFETY NOTE: IT IS THE CONTRACTOR'S RESPONSIBILITY TO COMPLY WITH THE PERTINENT SECTIONS OF THE A) "CONSTRUCTION SAFETY ORDERS" ISSUED BY THE STATE OF CALIFORNIA, LATEST EDITION, AND ALL OSHA REQUIREMENTS AS THEY APPLY TO THIS PROJECT. THE ENGINEER AND THE OWNER DO NOT ACCEPT ANY RESPONSIBILITY FOR THE CONTRACTOR'S B) FAILURE TO COMPLY WITH THESE REQUIREMENTS. THE CONTRACTOR SHALL BE RESPONSIBLE FOR ADEQUATE DESIGN AND CONSTRUCTION OF ALL C) FORMS AND SHORING REQUIRED.
6. CONTRACTOR SHALL VERIFY ALL DIMENSIONS, ELEVATIONS, PROPERTY LINES, ETC. ON THE JOB.
7. CONTRACTOR SHALL NOTIFY THE ENGINEER WHERE A CONFLICT OCCURS ON ANY OF THE CONTRACT DRAWINGS OR DOCUMENTS. CONTRACTOR IS NOT TO ORDER MATERIAL OR CONSTRUCT ANY PORTION OF STRUCTURES THAT IS IN CONFLICT UNTIL CONFLICT IS RESOLVED WITH THE AFFECTED PARTIES.
8. MECHANICAL AND ELECTRICAL EQUIPMENT SUPPORTS, ANCHORAGES, OPENINGS, RECESSES AND REVEALS NOT SHOWN ON THE STRUCTRUAL DRAWINGS, BUT REQUIRED BY OTHER CONTRACT DRAWINGS SHALL BE PROVIDED. OPENINGS THROUGH NEW AND EXISTING WALLS AND SLABS FOR PIPES, DUCTS CONDUITS, ETC. ARE NOT ALL SHOWN ON THE STRUCTURAL DRAWINGS. CONTRACTOR SHALL PROVIDE THESE OPENINGS IN ACCORDANCE WITH THE CONTRACT DOCUMENTS. REINFORCEMENT AROUND OPENINGS IN NEW WALLS AND SLABS SHALL BE AS SHOWN IN THE TYPICAL DETAILS UNLESS OTHERWISE SHOWN.
9. CONTRACTOR SHALL VERIFY MECHANICAL AND ELECTRICAL PLANS FOR THE LOCATION OF EQUIPMENT.

CONSTRUCTION LOADS:

STRUCTURES HAVE BEEN DESIGNED FOR OWNER'S OPERATIONAL LOADS ON THE FINISHED STRUCTURES. DURING CONSTRUCTION, THE CONTRACTOR IS RESPONSIBLE FOR PROTECTING AND BRACING THE STRUCTURES AND BALANCING WHEREVER EXCESSIVE CONSTRUCTION LOADS MAY OCCUR. BACKFILL SHALL BE PLACED AROUND STRUCTURES SYMMETRICALLY AND UNIFORMLY SO THAT LOADS AGAINST STRUCTURES ARE INTRODUCED IN BALANCE. LIQUID-CONTAINING STRUCTURES SHALL BE TESTED FOR WATER-TIGHTNESS BEFORE BACKFILLING - SEE SPECS.

CONCRETE AND REINFORCING STEEL:

1. CONCRETE CONSTRUCTION SHALL CONFORM TO ACI 350-06, ACI 318-19 AND ACI CODE OF STANDARD PRACTICE.
2. SEE SPECIFICATIONS FOR REQUIREMENTS.
3. CEMENT SHALL CONFORM TO ASTM C-150, TYPE II, MODIFIED/TYPE V.
4. CONCRETE AGGREGATES: NATURAL SAND AND ROCK AGGREGATES CONFORMING TO ASTM C-33.
5. REINFORCING SHALL CONFORM TO ASTM A706 GRADE 60, INCLUDING STIRRUPS AND TIES UNO.
6. WELDING OF REINFORCING STEEL SHALL CONFORM TO AWS D1.4 USING PROPER LOW HYDROGEN ELECTRODES. TACK WELDING TO REBAR IS STRICTLY PROHIBITED. SEE "REBAR WELDING".
7. REINFORCING STEEL SHALL BE DETAILED, FABRICATED, AND INSTALLED ACCORDING TO "MANUAL OF STANDARD PRACTICE FOR REINFORCED CONCRETE CONSTRUCTION" BY CRSI.
8. WIRE FABRIC SHALL CONFORM TO ASTM A-185.
9. DIMENSIONS SHOWN FOR LOCATION OF REINFORCING ARE TO THE FACE OF MAIN BARS AND DENOTE CLEAR COVERAGE. UNLESS OTHERWISE NOTED, CLEAR COVERAGE SHALL BE AS FOLLOWS:
   CONCRETE DEPOSITED DIRECTLY AGAINST GROUND (EXCEPT SLABS) . . . . . 3"
   FORMED CONCRETE EXPOSED TO WEATHER OR GROUND OR LIQUID
   #6 AND LARGER . . . . . 2"
   #5 AND SMALLER . . . . . 2"
   BEAMS (TOP BARS) . . . . . 1½"
   BEAMS (ALL OTHER MAIN REINFORCING) . . . . . 2"
   COLUMN MAIN REINFORCING . . . . . 2"
   SLABS ON GROUND WITH ONE LAYER OF REINFORCEMENT . . . . . POSITION IN CENTER OF SLAB
10. A) UNLESS OTHERWISE NOTED ALL BARS SHOWN WITH LAPS OR SPLICES SHALL HAVE CLASS 'B' LAP LENGTH. SEE TABLE BELOW .

CLASS 'B' LAP LENGTH

BAR SIZE	OTHER	TOP *
#3	1'-7"	2'-0"
#4	2'-1"	2'-8"
#5	2'-7"	3'-4"
#6	3'-1"	4'-0"
#7	4'-6"	5'-11"
#8	5'-2"	6'-9"
#9	5'-10"	7'-7"
#10	6'-7"	8'-6"
#11	7'-3"	9'-6"

* TOP REINFORCING IS HORIZONTAL REINFORCEMENT THAT HAS MORE THAN 12" OF CONCRETE PLACED BELOW IT.

   B) DOWEL ALL VERTICAL REBARS IN WALLS AND COLUMNS FROM FOUNDATION WITH SAME SIZE AND SPACING AS WALL VERTICAL BAR U.N.O.
   C) SPLICES IN ADJACENT HORIZ. BARS SHALL BE STAGGERED NOT LESS THAN 5'-0" APART.
   D) SPLICE CONTINUOUS BARS IN SOIL-BEARING GRADE BEAMS AS FOLLOWS: BOTTOM BARS AT MID-SPAN, TOP BARS AT CENTERLINE OF SUPPORT, UNLESS NOTED OTHERWISE.
   E) SPLICE CONTINUOUS BARS IN BEAMS, SPANDRELS, WALL BEAMS ETC. AS FOLLOWS: BOTTOM BARS AT CENTERLINE OF SUPPORT, TOP BARS AT MIDSPAN, UNLESS NOTED OTHERWISE.
   F) REINFORCING BARS SHALL BE RUN IN A MANNER THAT FORMS A CONTINUOUS SYSTEM OF BARS TYING ALL PARTS OF THE STRUCTURE TOGETHER. EXTEND ALL REINFORCING BARS AS FAR AS POSSIBLE IN EACH CONCRETE MEMBER AND TERMINATE BAR W/ 90° STD. HOOK TO 2" OF CONCRETE COVER OVER END OF HOOK. FACE OR BEND.
   G) BEAM STIRRUPS AND COLUMN TIES SHALL HOOK 135 DEGREES AROUND A CORNER BAR UNLESS NOTED OTHERWISE.

11. GENERAL:
   A) NO PIPES OR DUCTS SHALL BE PLACED IN CONCRETE SLABS, BEAMS, WALLS OR GRADE BEAMS UNLESS SPECIFICALLY DETAILED.
   B) REFER TO ARCHITECTURAL, STRUCTURAL, ELECTRICAL AND MECHANICAL DRAWINGS FOR ALL OPENINGS, FLANGES, MOULDS, GROOVES, CLIPS AND GROUNDS TO BE CAST IN CONCRETE.
12. CONSTRUCTION JOINTS SHALL BE MADE ROUGH AND ALL LAITANCE REMOVED FROM THE SURFACE. CONCRETE MAY BE ROUGHENED BY CHIPPING THE ENTIRE SURFACE, SANDBLASTING, OR HOSING THE SURFACE 4 TO 6 HOURS AFTER THE POUR WITH A FINE SPRAY.
13. REMOVE ALL DEBRIS FROM THE FORMS BEFORE PLACING ANY CONCRETE.
14. REINFORCING, DOWELS, BOLTS, ANCHORS, SLEEVES, ETC. TO BE EMBEDDED IN CONCRETE SHALL BE SECURELY POSITIONED BEFORE PLACING CONCRETE. OBTAIN APPROVAL OF ALL AFFECTED TRADES PRIOR TO PLACING CONCRETE.
15. MAXIMUM FREE FALL OF CONCRETE SHALL BE 4'-0".
16. CONCRETE FOR WALLS SHALL BE PLACED SO THAT NO PART OF THE LIFT IS MORE THAN 2 FT. HIGHER THAN ANY OTHER PART.
17. CONCRETE IN WALLS, PIERS, OR COLUMNS SHALL SET AT LEAST 2 HOURS BEFORE PLACING CONCRETE IN BEAMS, SPANDRELS, OR SLABS SUPPORTED THEREON.
18. REINFORCE ALL SLABS ON GRADE AS SHOWN ON DRAWINGS.
19. USE #2 SPREADERS APPROXIMATELY EVERY THIRD INTERSECTION EACH DIRECTION FOR ALL DOUBLE LAYER WALLS. PLACE SPREADERS IN VERTICAL LINES WITH FORM TIES.
20. NO WOOD SPREADERS ARE ALLOWED. NO WOOD STAKES ARE ALLOWED IN AREAS TO BE CONCRETED.
21. CONCRETE MIX DESIGN SHALL BE SUBMITTED FOR ENGINEER'S REVIEW PRIOR TO PLACING CONCRETE.
22. NOTIFY THE ENGINEER 48 HOURS PRIOR TO PLACING CONCRETE.
23. SPACING OF CONST. JOINTS IN WALLS AND SLABS IS 30 FT. MAXIMUM EA. WAY; LENGTH OF WALL POUR FROM CORNER IS 20 FT. MAXIMUM; MAXIMUM AREA OF ONE POUR IS 900 SF. U.N.O. SUBMIT SHOP DRAWINGS FOR APPROVAL.
24. EXCEPT AS OTHERWISE REQUIRED, EXPOSED CONCRETE CORNERS AND EDGES SHALL HAVE 3/4" CHAMFERS. RE ENTRANT CORNERS SHALL NOT HAVE FILLETS.
25. POST INSTALLED ANCHORS AS APPROVED BY ICC-ES FOR THE USE IN CRACKED CONCRETE SHALL BE USED. THE DESIGN SHALL BE IN ACCORDANCE WITH CHAPTER-17 OF ACI 318-19. PROVIDE ICC-ES REPORT FOR ENGINEERS APPROVAL.
26. IF EXPANSION JOINTS ARE GOING TO BE USED, THEY WILL BE SHOWN ON CONSTRUCTION DRAWINGS.

ISSUED FOR BID	BPC	SLB	24.03.15
Issued	By	Appd	YY.MM.DD

Permit/Seal

REGISTERED PROFESSIONAL ENGINEER — DAVID SHELL — No. 21317 — Exp.6-30-24 — STRUCTURAL — STATE OF CALIFORNIA

2024.03.15

Consultant

Stantec

Stantec Consulting Services Inc.
2250 Douglas Blvd., Suite 260
Roseville CA 95661
Tel:(916) 773-8100
www.stantec.com

Copyright Reserved
The Contractor shall verify and be responsible for all dimensions. DO NOT scale the drawing - any errors or omissions shall be reported to Stantec without delay.
The Copyrights to all designs and drawings are the property of Stantec. Reproduction or use for any purpose other than that authorized by Stantec is forbidden.

Client/Project Logo

COUNTY OF EL DORADO
COMMUNITY DEVELOPMENT SERVICES
ENVIRONMENTAL
MANAGEMENT DEPARTMENT
2850 FAIRLANE COURT
PLACERVILLE, CALIFORNIA 95667

Client/Project

County of El Dorado
UNION MINE
WASTEWATER TREATMENT PLANT
HEADWORKS
County of El Dorado, California

File Name: 032224-S001 & S002 | SDS Dwn. | SDS Dsgn. | KKC Chkd. | 24.03.15 YY.MM.DD

Title

TYPICAL STRUCTURAL NOTES

Project No. 184032224 | Scale AS SHOWN
Revision 0 | Sheet 11 of 35 | Drawing No. S001

WATER STOPS FOR CONCRETE CONSTRUCTION:

1. ALL WATER STOPS SHALL BE INSTALLED ACCORDING TO THE MANUFACTURER'S SPECIFICATIONS TO GIVE A WATERTIGHT JOINT.
2. WATER STOPS SHALL BE CAREFULLY POSITIONED IN PLACE AND SUPPORTED AS REQUIRED TO REMAIN IN PLACE DURING OPERATIONS.
3. WATERSTOPS MUST BE USED AT ALL CONSTRUCTION JOINTS IN LIQUID CONTAINING STRUCTURES.

REBAR WELDING:

ALL REBAR TO BE WELDED SHALL BE CONTINUOUSLY INSPECTED BY A QUALIFIED LABORATORY APPROVED BY THE BUILDING OFFICIAL OF LOCAL JURISDICTION. CONTRACTOR MUST FURNISH TO THE LABORATORY MILL CERTIFICATES SHOWING CHEMICAL ANALYSIS. ALL PREHEATING AND WELDING SHALL BE DONE IN ACCORDANCE WITH AWS D1.4 STANDARDS (LATEST EDITION).

STRUCTURAL STEEL:

1. FABRICATION, ERECTION AND MATERIALS SHALL CONFORM WITH THE CURRENT AISC SPECIFICATION FOR THE DESIGN, FABRICATION AND ERECTION OF STRUCTURAL STEEL FOR BUILDINGS AND 2022 CALIFORNIA BUILDING CODE.
2. W, WT STRUCTURAL SECTIONS SHALL CONFORM TO A992 GRADE 50. CHANNELS, ANGLES AND MISCELLANEOUS STRUCTURAL STEEL SHALL CONFORM TO ASTM A-36 UNO.
3. PIPE COLUMNS SHALL CONFORM TO ASTM A53, TYPE E OR S, GRADE B.
4. TUBE COLUMNS SHALL CONFORM TO ASTM A500, GRADE B.
5. WELDING SHALL BE DONE BY THE ELECTRIC ARC PROCESS IN ACCORDANCE WITH "AWS" STANDARDS, USING ONLY CERTIFIED WELDERS. ALL BUTT WELDS SHALL HAVE COMPLETE PENETRATION. ALL EXPOSED BUTT WELDS SHALL BE GROUND.
6. PLACE NON-SHRINK GROUT UNDER ALL BEARINGS ON CONCRETE OR MASONRY BEFORE ADDING VERTICAL LOAD.
7. ALL STRUCTURAL STEEL SHALL BE ERECTED PLUMB AND TRUE TO LINE. TEMPORARY BRACING SHALL BE INSTALLED AND SHALL BE LEFT IN PLACE UNTIL OTHER MEANS ARE PROVIDED TO ADEQUATELY BRACE THE STRUCTURE.
8. HOLES FOR BOLTS SHALL BE OF THE SAME NOMINAL DIAMETER AS THE BOLT PLUS 1/16".
9. USE STANDARD AISC GAGE AND PITCH FOR BOLTS EXCEPT AS NOTED OTHERWISE.
10. HIGH STRENGTH BOLTS SHALL BE 3/4" DIAMETER ASTM F3125 GR A325-N UNO-SEE SPECIFICATIONS.

FOUNDATIONS:

1. BEARING SOIL IS CLASSIFIED AS: SEE GEOTECHNICAL ENGINEERING REPORT.
2. THE FOOTINGS SHALL BEAR ON FIRM, DRY NATIVE MATERIAL OR ENGINEERED FILL WITH A MINIMUM PENETRATION OF 18 INCHES.
3. EXCAVATIONS SHALL BE CLEANED OF ALL DEBRIS. STANDING WATER SHALL BE REMOVED.
4. ALL FOOTINGS SHALL BE FORMED. FOUNDATIONS MAY BE PLACED IN NEAT EXCAVATIONS PROVIDED WRITTEN PERMISSION IS OBTAINED FROM THE ENGINEER AND FOOTINGS ARE INCREASED 2" IN WIDTH. SEE TYPICAL DETAIL.
5. NOTIFY THE ENGINEER 48 HOURS BEFORE PLACING FOUNDATIONS.
6. ALL EARTHWORK AND FOUNDATION SUBGRADES SHALL BE INSPECTED AND APPROVED BY THE PROJECT GEOTECHNICAL ENGINEER.

STRUCTURAL ALUMINUM:

1. ALUMINUM CONSTRUCTION SHALL CONFORM TO THE LATEST EDITION OF THE ALUMINUM CONSTRUCTION MANUAL OF THE ALUMINUM ASSOCIATION.
2. UNLESS OTHERWISE INDICATED, STRUCTURAL ALUMINUM SHALL BE ALLOY 6061-T6 AS SPECIFIED IN ASTM B308.
3. WHERE ALUMINUM IS IN CONTACT WITH CONCRETE OR MASONRY SURFACES, CONTACT SURFACES SHALL BE COATED WITH HEAVY ALKALI-RESISTANT BITUMINOUS PAINT.

EXPANSION ANCHOR AND ADHESIVE ANCHOR NOTES:

1. ANCHORS SHALL BE INSTALLED IN ACCORDANCE WITH THE RECOMMENDATIONS GIVEN IN THE ICC-ES REPORT.
2. SPECIAL INSPECTION IS REQUIRED FOR ICC ALLOWABLE TENSION VALUES LISTED IN THE INSPECTION NOTES. UNLESS NOTED OTHERWISE ANCHORS HAVE BEEN DESIGNED FOR SPECIAL INSPECTION.
3. DESIGN LOADS ON ANCHORS ARE NOT TO EXCEED 80% OF THE TENSION AND SHEAR VALUES AS RECOMMENDED BY THE MANUFACTURER.
4. TENSION TEST LOAD VALUES ARE BASED ON 80% OF TWICE THE TENSION VALUES LISTED.
5. ALLOWABLE LOADS MAY NOT BE INCREASED FOR DURATION OF LOADS SUCH AS WIND OR SEISMIC FORCES.
6. WHEN INSTALLING DRILLED IN ANCHORS IN EXISTING CONCRETE OR MASONRY, USE CARE AND CAUTION TO AVOID CUTTING OR DAMAGING EXISTING REINFORCING BARS.
7. THE TESTING OF THE ANCHORS SHALL BE DONE BY THE TESTING LABORATORY AND A REPORT OF THE TEST RESULTS SHALL BE SUBMITTED TO THE GOVERNING AGENCY AND ARCHITECT/STRUCTURAL ENGINEER. TESTING SHALL OCCUR 24 HOURS MINIMUM AFTER THE INSTALLATION OF THE ANCHORS.
8. ANCHORS INSTALLED IN METAL DECK WITH CONCRETE SHALL BE INSTALLED IN THE CENTER OF THE LOW FLUTE OF THE DECKING. THE DECKING SHALL HAVE A MINIMUM THICKNESS OF 20 GAUGE. THE MINIMUM DEPTH OF EMBEDMENT ABOVE THE TOP OF THE DECK SHALL BE 1-1/2". THE EFFECTIVE DEPTH OF EMBEDMENT IS CONSIDERED TO BE 1/3 OF THE METAL DECK HEIGHT PLUS THE DEPTH OF EMBEDMENT ABOVE THE TOP OF THE DECK.
9. ANCHORS SHALL NOT BE INSTALLED IN CONCRETE LESS THAN 21 DAYS OLD.
10. WHERE ADHESIVE ANCHORS ARE ALLOWED, PERSONNEL USED FOR INSTALLATION SHALL BE CERTIFIED BY AN APPLICABLE CERTIFICATION PROGRAM PER ACE 318-19 SECTION 26.7.1(I)

CODE:

1. 2022 CALIFORNIA BUILDING CODE (CBC).
2. CODE REQUIREMENTS FOR ENVIRONMENTAL ENGINEERING CONCRETE STRUCTURES (ACI 350-06) AND COMMENTARY (ACI 350R-06).
3. BUILDING CODE REQUIREMENTS FOR STRUCTURAL CONCRETE (ACI 318-19).
4. MINIMUM DESIGN LOADS FOR BUILDINGS AND OTHER STRUCTURES (ASCE 7-16).

EARTHQUAKE DESIGN DATA:

SEISMIC COEFFICIENTS	Ss = 0.409g	Sms = 0.531g
	S1 = 0.201g	Sm1 = 0.301g
	Fa = 1.3	SDS = 0.354g
	Fv = 1.5	SD1 = 0.201g
SITE CLASS	C	
RISK CATEGORY	III	
SEISMIC DESIGN CATEGORY	D	
IMPORTANCE FACTOR	I =1.25	

SEE SPECIFICATION SECTION - 01610 FOR OTHER REQUIREMENTS.

WIND DESIGN REQUIREMENTS:

BASIC WIND SPEED	100 MPH
EXPOSURE CATEGORY	C
RISK CATEGORY	III

SEE SPECIFICATION SECTION - 01615 FOR OTHER REQUIREMENTS.

GEOTECHNICAL REPORT:

FOR GEOTECHNICAL DATA, REFER TO GEOTECHNICAL REPORT FILE No. 23-933.1, UNION MINE WWTF HEADWORKS IMPROVEMENT PROJECT, EL DORADO COUNTY, CALIFORNIA BY CRAWFORD & ASSOCIATES, DATED OCTOBER 11, 2023.

FLOOR LIVE LOAD:

SLAB ON GRADE= 250 PSF
AND GRATING = 100 PSF

FLOOD DESIGN DATA:

FLOOD ZONE X
MAP NUMBER 06017C0775E
DATED 9/26/2008

ISSUED FOR BID	BPC	SLB	24.03.15
Issued	By	Appd	YY.MM.DD

Permit/Seal

REGISTERED PROFESSIONAL ENGINEER — DANIEL SHELL — No. 31 — Exp.6-30-24 — STRUCTURAL — STATE OF CALIFORNIA

2024.03.15

Consultant

Stantec

Stantec Consulting Services Inc.
2250 Douglas Blvd., Suite 260
Roseville CA 95661
Tel:(916) 773-8100
www.stantec.com

Copyright Reserved
The Contractor shall verify and be responsible for all dimensions. DO NOT scale the drawing - any errors or omissions shall be reported to Stantec without delay.
The Copyrights to all designs and drawings are the property of Stantec. Reproduction or use for any purpose other than that authorized by Stantec is forbidden.

Client/Project Logo

COUNTY OF EL DORADO
COMMUNITY DEVELOPMENT SERVICES
ENVIRONMENTAL
MANAGEMENT DEPARTMENT
2850 FAIRLANE COURT
PLACERVILLE, CALIFORNIA 95667

Client/Project

County of El Dorado
UNION MINE
WASTEWATER TREATMENT PLANT
HEADWORKS
County of El Dorado, California

File Name: 032224-S001 & S002 | SDS Dwn. | SDS Dsgn. | KKC Chkd. | 24.03.15 YY.MM.DD

Title

TYPICAL STRUCTURAL NOTES

Project No.	Scale
184032224	AS SHOWN
Revision	Sheet / Drawing No.
0	12 of 35 — S002

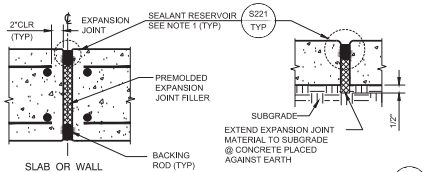

SLAB OR WALL WITHOUT WATERSTOP

SLAB ON GRADE A -

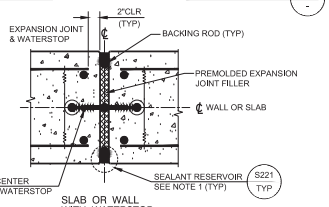

SLAB OR WALL WITH WATERSTOP

NOTES:

1. USE A - AT UNDERSIDE OF SLABS ON GRADE ONLY.
2. SEE DRAWINGS FOR LOCATION OF REINFORCEMENT.
3. WATERSTOP SHALL BE THOROUGHLY CLEANED PRIOR TO PLACING CONCRETE.
4. SINGLE LAYER REINFORCED SLABS OR WALLS SIMILAR.

EXPANSION JOINT

SCALE: NONE — S200 TYP

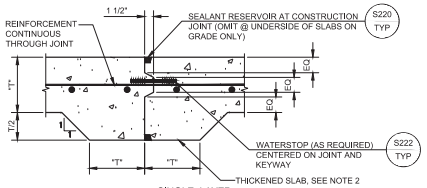

SINGLE LAYER REINFORCING

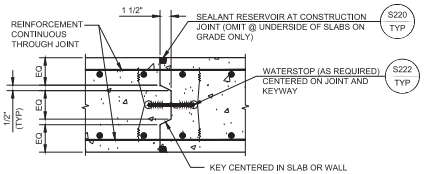

DOUBLE LAYER REINFORCING

NOTES:

1. SANDBLAST JOINT & REINFORCEMENT PRIOR TO PLACING CONCRETE FOR NEXT SLAB OR WALL.
2. THICKENED SECTION FOR CONCRETE PLACED AGAINST EARTH ONLY.
3. WATERSTOP SHALL BE THOROUGHLY CLEANED BEFORE PLACING CONCRETE.
4. SEE DRAWINGS FOR REINFORCEMENT.

KEYED CONSTRUCTION JOINT

SCALE: NONE — S205 TYP

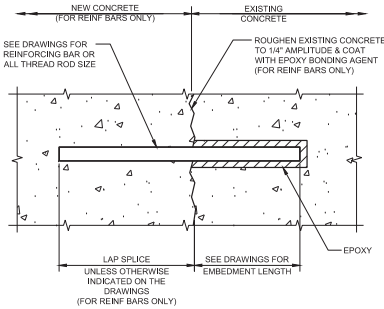

NOTES:

1. INSTALLATION OF REINFORCING BARS AND ALL THREAD RODS AS INDICATED IN THE SPECIFICATIONS.

EPOXY BONDED REINFORCING BARS

SCALE: NONE — S206 TYP

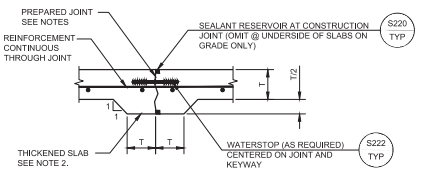

SINGLE LAYER REINFORCING

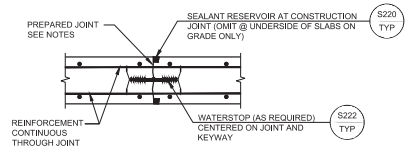

DOUBLE LAYER REINFORCING

NOTES:

1. SANDBLAST JOINT AND REINFORCEMENT PRIOR TO PLACING CONCRETE FOR NEXT SLAB OR WALL.
2. THICKENED SECTION FOR CONCRETE PLACED AGAINST EARTH.
3. WATERSTOP SHALL BE THOROUGHLY CLEANED BEFORE PLACING CONCRETE.
4. SEE DRAWINGS FOR REINFORCEMENT.

NON-KEYED CONSTRUCTION JOINT

SCALE: NONE — S207 TYP

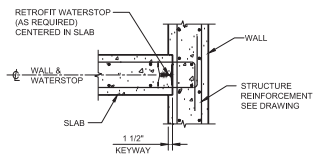

RETROFIT WATERSTOP

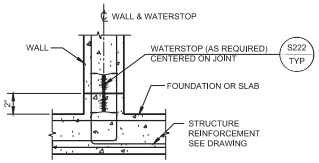

FLATSTRIP WATERSTOP

NOTES:

1. SANDBLAST JOINT AND REINFORCEMENT PRIOR TO PLACING CONCRETE FOR NEXT SLAB OR WALL.
2. SEE DRAWINGS FOR REINFORCEMENT.
3. WATERSTOP SHALL BE THOROUGHLY CLEANED BEFORE PLACING CONCRETE.

CONSTRUCTION JOINT-WALL TO FOUNDATION DOUBLE LAYER REINFORCING

SCALE: NONE — S209 TYP

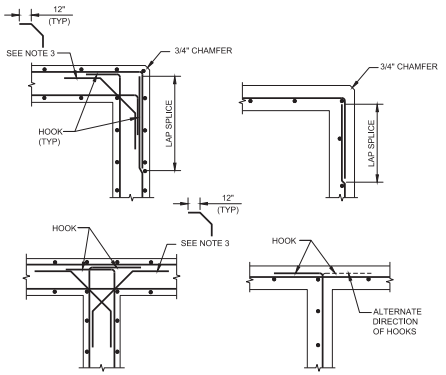

NOTES:

1. ALL HOOKS SHALL BE ACI STD 90 DEGREE HOOKS WITH 12" MINIMUM RETURN.
2. FOR VERTICAL AND HORIZONTAL BARS SEE STRUCTURAL PLANS.
3. MATCH DIAGONAL BAR SIZE AND SPACING SAME AS REGULAR HORIZONTAL BAR.

REINFORCEMENT AT CORNERS AND INTERSECTIONS

SCALE: NONE — S213 TYP

BAR SIZE	GRADE 60	
	A	B
#3	17"	22"
#4	22"	29"
#5	28"	36"
#6	33"	43"
#7	48"	63"
#8	55"	72"
#9	62"	81"
#10	70"	91"

NOTES FOR DETAILS: S216, S217

1. THIS DETAIL TO BE USED EXCEPT WHEN NOTED OTHERWISE ON STRUCTURAL DRAWINGS.
2. NORMAL REINFORCEMENT CUT AT OPENING:
   AS_1 = 1/2 TOTAL Av CUT BARS
   AS_2 = 1/2 TOTAL Ah CUT BARS
   TO BE ADDED ON EACH SIDE OF OPENING.
3. DIAGONAL BARS TO BE PLACED:
   a) AT CENTER LINE OF WALL OR SLAB WHERE ONE LAYER OF REINFORCEMENT IS PROVIDED.
   b) AT EACH FACE OF WALLS OR SLABS WHERE TWO LAYERS OF REINFORCEMENT ARE PROVIDED.
4. PROVIDE DIAGONAL DOWEL FOR EACH LAYER OF REINFORCEMENT (#4 x 3'-0") U.N.O.
5. LOCATE ADDITIONAL BARS AT MID SPACING BETWEEN CONTINUOUS BARS THAT ARE NOT CUT.

NOTES FOR ADDITIONAL REINFORCEMENT AT OPENINGS

SCALE: NONE — S215 TYP

ISSUED FOR BID	BPC	SLB	24.03.15
Issued	By	Appd	YY.MM.DD

Permit/Seal

REGISTERED PROFESSIONAL ENGINEER — DANIEL S. SHEN — No. C 51 — Exp.6-30-24 — STRUCTURAL — STATE OF CALIFORNIA

2024.03.15

Consultant

Stantec

Stantec Consulting Services Inc.
2250 Douglas Blvd., Suite 260
Roseville CA 95661
Tel:(916) 773-8100
www.stantec.com

Copyright Reserved
The Contractor shall verify and be responsible for all dimensions. DO NOT scale the drawing - any errors or omissions shall be reported to Stantec without delay. The Copyrights to all designs and drawings are the property of Stantec. Reproduction or use for any purpose other than that authorized by Stantec is forbidden.

Client/Project Logo

COUNTY OF EL DORADO
COMMUNITY DEVELOPMENT SERVICES
ENVIRONMENTAL MANAGEMENT DEPARTMENT
2850 FAIRLANE COURT
PLACERVILLE, CALIFORNIA 95667

Client/Project

County of El Dorado
UNION MINE
WASTEWATER TREATMENT PLANT
HEADWORKS
County of El Dorado, California

File Name: 032224-S003 TO S008 | SDS Dwn. | KKC Dsgn. | SDS Chkd. | 24.03.15 YY.MM.DD

Title

TYPICAL STRUCTURAL DETAILS

Project No. 184032224 | Scale AS SHOWN
Revision 0 | Sheet 13 of 35 | Drawing No. S003

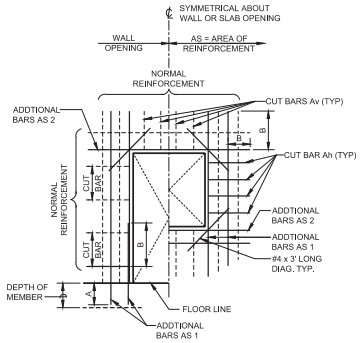

NOTES:

1. IF "A" IS GREATER THAN DEPTH OF MEMBER PROVIDE HOOKED BAR.
2. FOR ADDITIONAL REINFORCEMENT SIZES & LENGTHS SEE S215 TYP

ADDITIONAL REINFORCEMENT AT RECTANGULAR OPENINGS

SCALE: NONE — S216 TYP

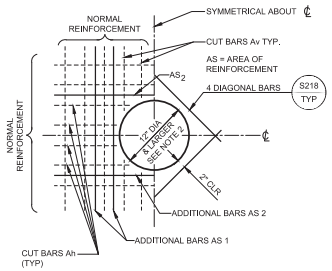

ELEVATION

NOTES:

1. FOR ADDITIONAL REINFORCEMENT SIZES & LENGTHS SEE S215 TYP
2. FOR CIRCULAR OPENINGS LESS THAN 12"Ø, SEE S218 TYP

ADDITIONAL REINFORCEMENT AT CIRCULAR OPENINGS

SCALE: NONE — S217 TYP

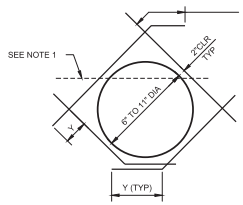

BAR SIZE	"Y"
#4	22"
#5	28"
#6	33"
#7	48"
#8	55"
#9	62"
#10	70"

NOTES:

1. CUT TYPICAL REINFORCEMENT AT OPENING.
2. DIAGONAL BARS TO BE PLACED: a) AT CENTERLINE OF WALL OR SLAB WHERE ONE LAYER OF REINFORCEMENT IS PROVIDED. b) AT EACH FACE OF WALLS OR SLABS WHERE TWO LAYERS OF REINFORCEMENT ARE PROVIDED.
3. UNLESS OTHERWISE NOTED, SIZE OF DIAGONAL BARS SHALL BE THE SIZE OF THE LARGEST REINFORCEMENT CUT.
4. USE THIS DETAIL FOR ALL CIRCULAR OPENINGS 6" THROUGH 11" UNLESS OTHERWISE NOTED ON THE STRUCTAL DRAWINGS.

DIAGONAL REINFORCEMENT AT CIRCULAR OPENINGS

SCALE: NONE — S218 TYP

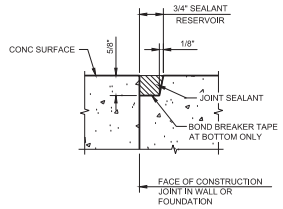

NOTES:

1. SEE SPECIFICATIONS FOR SURFACE PREPARATION.
2. PRIME VERTICAL EDGES.

SEALANT RESERVOIR AT CONSTRUCTION JOINT

SCALE: NONE — S220 TYP

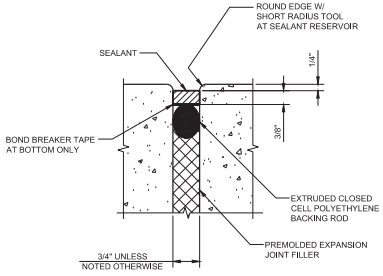

SEALANT RESERVOIR AT EXPANSION JOINT

SCALE: NONE — S221 TYP

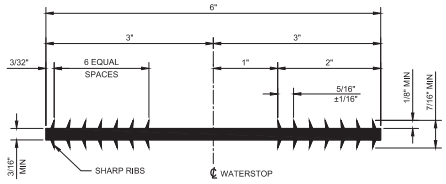

PVC FLATSTRIP WATERSTOP

SCALE: NONE — S222 TYP

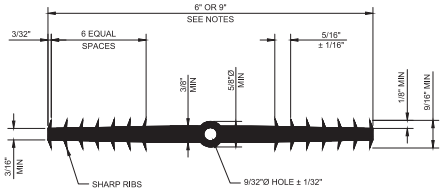

NOTES:

1. USE 6" WATERSTOP FOR EXPANSION JOINT WITH 1 1/2" MAXIMUM JOINT WIDTH.
2. USE 9" WATERSTOP FOR EXPANSION JOINTS WITH WIDTH GREATER THAN 1 1/2".

PVC CENTER BULB WATERSTOP

SCALE: NONE — S223 TYP

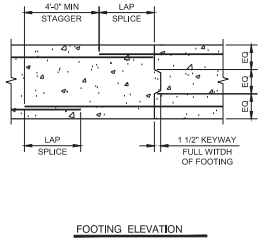

FOOTING ELEVATION

NOTES:

1. SEE TYPICAL STRUCTURAL NOTES "CONCRETE AND REINFORCING STEEL" NOTES FOR REINFORCEMENT LAP SPLICE LENGTH REQUIREMENTS.

FOOTING CONSTRUCTION JOINT

SCALE: NONE — S233 TYP

ISSUED FOR BID	BPC	SLB	24.03.15
Issued	By	Appd	YY.MM.DD

Permit/Seal

REGISTERED PROFESSIONAL ENGINEER — No. S-6351 — Exp.6-30-24 — STRUCTURAL — STATE OF CALIFORNIA

2024.03.15

Consultant

Stantec

Stantec Consulting Services Inc.
2250 Douglas Blvd., Suite 260
Roseville CA 95661
Tel:(916) 773-8100
www.stantec.com

Copyright Reserved
The Contractor shall verify and be responsible for all dimensions. DO NOT scale the drawing - any errors or omissions shall be reported to Stantec without delay. The Copyrights to all designs and drawings are the property of Stantec. Reproduction or use for any purpose other than that authorized by Stantec is forbidden.

Client/Project Logo

COUNTY OF EL DORADO
COMMUNITY DEVELOPMENT SERVICES
ENVIRONMENTAL
MANAGEMENT DEPARTMENT
2850 FAIRLANE COURT
PLACERVILLE, CALIFORNIA 95667

Client/Project

County of El Dorado
UNION MINE
WASTEWATER TREATMENT PLANT
HEADWORKS
County of El Dorado, California

File Name: 032224-S003 TO S008 — SDS Dwn. — KKC Dsgn. — SDS Chkd. — 24.03.15 YY.MM.DD

Title

TYPICAL STRUCTURAL DETAILS

Project No. 184032224 — Scale AS SHOWN

Revision 0 — Sheet 14 of 35 — Drawing No. S004

1. THE MINIMUM PAD SIZE SHALL BE AS INDICATED OR AS SHOWN ON THE DRAWINGS OR AS DETERMINED BY THE EQUIPMENT MANUFACTURER.
2. THE SIZE, NUMBER, TYPE, LOCATION AND THREAD PROJECTION OF THE ANCHOR BOLTS SHALL BE DETERMINED BY THE EQUIPMENT MANUFACTURER. HOLD CONCRETE ANCHOR BOLTS IN POSITION WITH A TEMPLATE WHILE PAD IS BEING PLACED.
3. USE ANCHOR BOLT SLEEVES TO PROVIDE THE ANCHOR BOLT A MINIMUM MOVEMENT OF 1/2" IN ALL DIRECTIONS. SLEEVES SHALL BE FILLED WITH NON-SHRINK GROUT.
4. ANCHOR BOLT SLEEVES SHALL HAVE A MINIMUM INTERNAL DIAMETER 1" GREATER AND A MAXIMUM INTERNAL DIAMETER 3" GREATER THAN "D" ANCHOR BOLT DIAMETER.
5. EQUIPMENT BASES SHALL BE INSTALLED LEVEL UNLESS NOTED OTHERWISE ON THE PLANS.
6. PROVIDE WEDGES OR SHIMS TO SUPPORT THE BASE WHILE THE NON-SHRINK GROUT IS PLACED. TEMPORARY LEVELING NUTS SHALL BE BACKED OFF. THE WEDGES OR SHIMS THAT REMAIN IN PLACE SHALL NOT BE EXPOSED TO VIEW.
7. WHERE CONCRETE SLAB OR BEAM THICKNESS WILL NOT ACCOMMODATE THE ANCHOR BOLT, PROVIDE EXTRA THICKNESS OF SLAB OR BEAM.
8. CONTRACTOR TO PROVIDE STRUCTURAL CALCS STAMPED BY A CALIFORNIA REGISTERED CIVIL ENGINEER FOR EQUIPMENT ANCHORAGE.

EQUIPMENT BASE NOTES
SCALE: NONE — S235 TYP

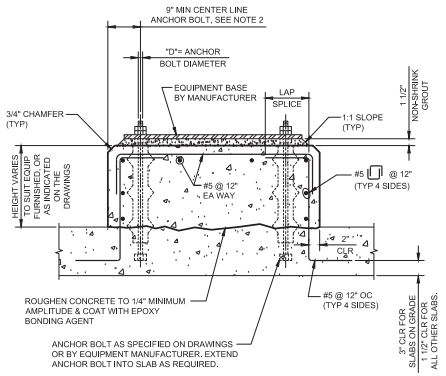

NOTES: FOR ADDITIONAL NOTES SEE S235 TYP

EQUIPMENT BASE WITH GROUT PAD
SCALE: NONE — S236 TYP

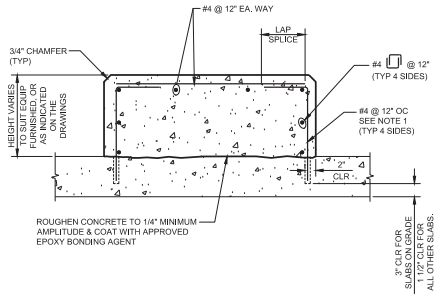

NOTES:
1. DOWELS SHALL HAVE MINIMUM 4" EMBEDMENT AND BE SECURED WITH APPROVED ADHESIVE EPOXY.
2. FOR ADDITIONAL NOTES SEE EQUIPMENT BASE NOTES, TYPICAL DETAIL S235.

EQUIPMENT BASE
SCALE: NONE — S237 TYP

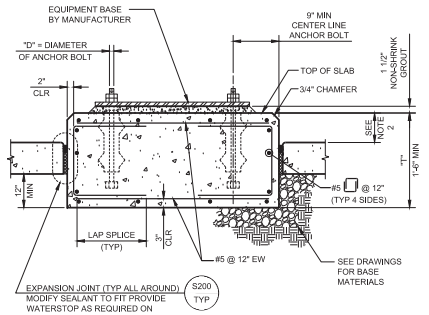

NOTES:
1. PAD THICKNESS "T" AS REQUIRED BY EQUIPMENT MANUFACTURER. PAD DIMENSIONS, ANCHOR BOLT SIZE AND LOCATION AND OTHER EMBEDDED STEEL SHALL CONFORM TO EQUIPMENT MANUFACTURER'S REQUIREMENTS.
2. HEIGHT VARIES TO SUIT EQUIPMENT FURNISHED OR AS INDICATED ON THE DRAWINGS.
3. FOR ADDITIONAL NOTES SEE S235 TYP

ISOLATED EQUIPMENT BASE
SCALE: NONE — S238 TYP

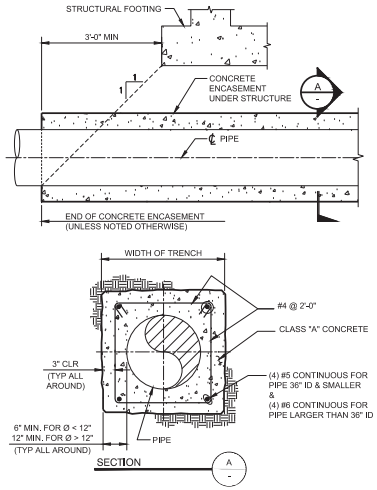

CONCRETE ENCASEMENT OF PIPE
SCALE: NONE — S240 TYP

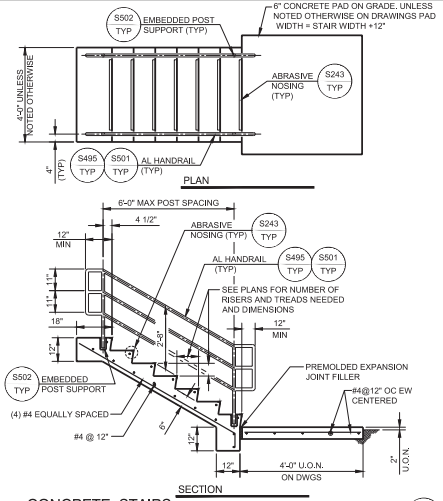

CONCRETE STAIRS
SCALE: NONE — S242 TYP

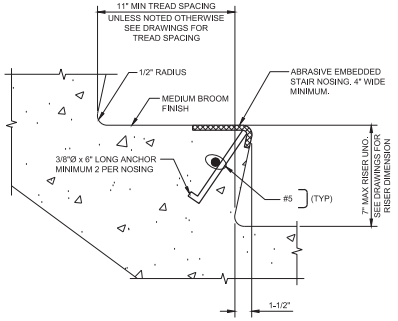

NOTES:
1. ANY FASTENERS IN THE STAIR NOSING SHALL BE TYPE 304 OR 316 SST.
2. USE CONCRETE HARDENER ON ALL TREAD SURFACES.

CONCRETE STAIR NOSING
SCALE: NONE — S243 TYP

THICKNESS t	BARS "A" SIZE/SPACING	BARS "B" SIZE/SPACING
4"	#4 @ 18" CC	#4 @ 18" CC
6"	#5 @ 18" CC	#5 @ 18" CC
8"	#5 @ 12" CC	#5 @ 12" CC
12"	#5 @ 12" CC T&B	#5 @ 12" CC T&B

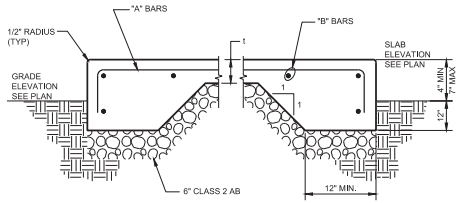

NOTES:
1. FOR SLAB THICKNESS UP TO 8", REINFORCEMENT SHALL BE PLACED AT SLAB CENTER.

CONCRETE SLAB ON GRADE
SCALE: NONE — S245 TYP

	ISSUED FOR BID	BPC	SLB	24.03.15
	Issued	By	Appd	YY.MM.DD

Permit/Seal: REGISTERED PROFESSIONAL ENGINEER — DAVID ST. JOHN — No. 24351 — Exp.6-30-24 — STRUCTURAL — STATE OF CALIFORNIA
2024.03.15

Consultant

Stantec
Stantec Consulting Services Inc.
2250 Douglas Blvd., Suite 260
Roseville CA 95661
Tel:(916) 773-8100
www.stantec.com

Copyright Reserved
The Contractor shall verify and be responsible for all dimensions. DO NOT scale the drawing - any errors or omissions shall be reported to Stantec without delay.
The Copyrights to all designs and drawings are the property of Stantec. Reproduction or use for any purpose other than that authorized by Stantec is forbidden.

Client/Project Logo

COUNTY OF EL DORADO
COMMUNITY DEVELOPMENT SERVICES
ENVIRONMENTAL MANAGEMENT DEPARTMENT
2850 FAIRLANE COURT
PLACERVILLE, CALIFORNIA 95667

Client/Project
County of El Dorado
UNION MINE
WASTEWATER TREATMENT PLANT
HEADWORKS
County of El Dorado, California

File Name: 032224-S003 TO S008 | SDS Dwn. | SDS Dsgn. | KKC Chkd. | 24.03.15 YY.MM.DD

Title
TYPICAL STRUCTURAL DETAILS

Project No. 184032224 | Scale AS SHOWN
Revision 0 | Sheet 15 of 35 | Drawing No. S005

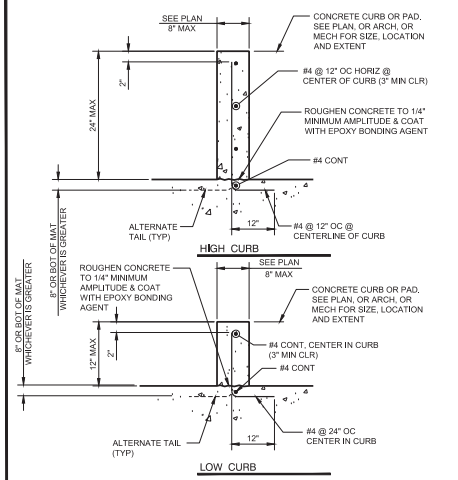

CONCRETE CURB

SCALE: NONE

S244 TYP

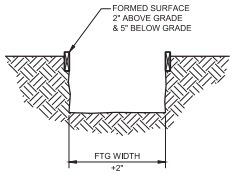

FOOTING POUR OPTION

SCALE: NONE

S246 TYP

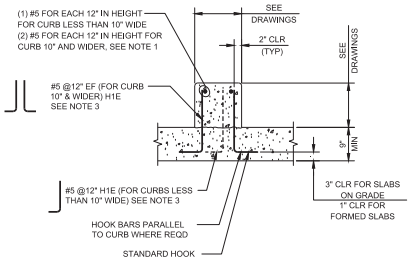

CURB CROSS SECTION

NOTES:

1. SPACING SHALL NOT BE GREATER THAN 12"
2. ROUGHEN CONCRETE TO 1/4" MINIMUM AMPLITUDE AND COAT WITH EPOXY BONDING AGENT
3. H1E DENOTES HOOK ONE END
4. SEE DRAWINGS FOR GRATING AND EQUIPMENT ANCHORAGE WHERE OCCURS.

HEAVY DUTY CONCRETE CURB

SCALE: NONE

S248 TYP

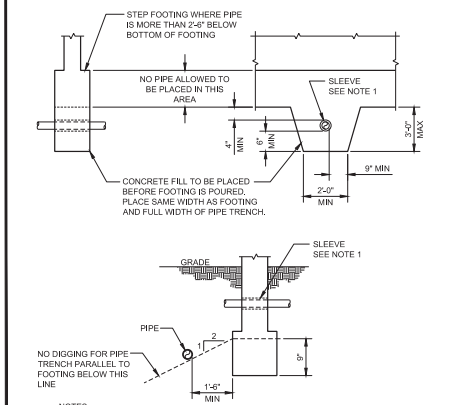

NOTES:

1. ALL PIPES TO CLEAR SLEEVES BY 2" ANNULAR ALL AROUND TYPICAL CAULK WITH PLASTIC MATERIAL.
2. IF PIPE IS IN PLACE PRIOR TO POURING CONCRETE WRAP PIPE WITH 1" GLASS WOOL INSULATION BEFORE POURING CONCRETE IN LIEU OF SLEEVE.

PIPE THROUGH FOOTING

SCALE: NONE

S254 TYP

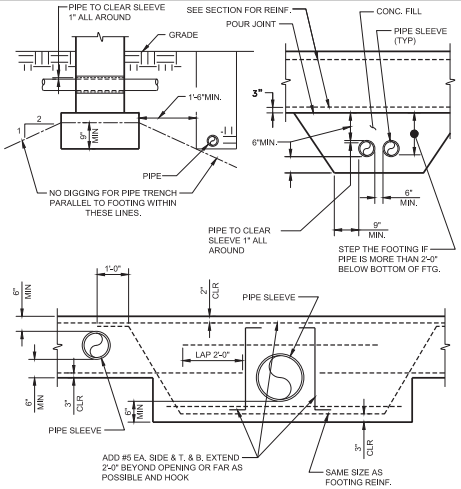

TYPICAL LOCATION OF PIPE AT FOOTING

SCALE: NONE

S260 TYP

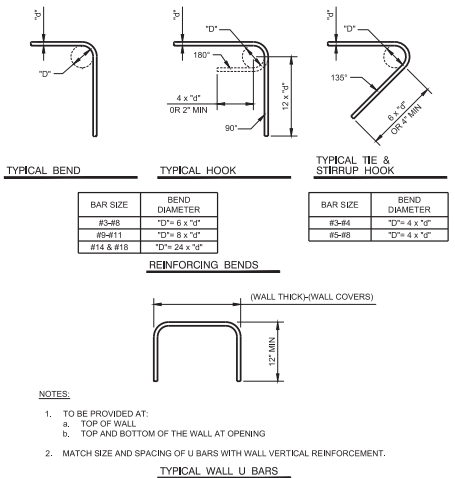

BAR SIZE	BEND DIAMETER
#3-#8	"D"= 6 x "d"
#9-#11	"D"= 8 x "d"
#14 & #18	"D"= 24 x "d"

REINFORCING BENDS

BAR SIZE	BEND DIAMETER
#3-#4	"D"= 4 x "d"
#5-#8	"D"= 4 x "d"

NOTES:

1. TO BE PROVIDED AT:
   a. TOP OF WALL
   b. TOP AND BOTTOM OF THE WALL AT OPENING
2. MATCH SIZE AND SPACING OF U BARS WITH WALL VERTICAL REINFORCEMENT.

TYPICAL WALL U BARS

REINFORCING BENDS

SCALE: NONE

S257 TYP

ISSUED FOR BID — BPC — SLB — 24.03.15

Issued — By — Appd — YY.MM.DD

Permit/Seal

REGISTERED PROFESSIONAL ENGINEER — STATE OF CALIFORNIA — No. S8431 — Exp.6-30-24 — STRUCTURAL

2024.03.15

Consultant

Stantec

Stantec Consulting Services Inc.
2250 Douglas Blvd., Suite 260
Roseville CA 95661
Tel:(916) 773-8100
www.stantec.com

Copyright Reserved
The Contractor shall verify and be responsible for all dimensions. DO NOT scale the drawing - any errors or omissions shall be reported to Stantec without delay.
The Copyrights to all designs and drawings are the property of Stantec. Reproduction or use for any purpose other than that authorized by Stantec is forbidden.

Client/Project Logo

COUNTY OF EL DORADO
COMMUNITY DEVELOPMENT SERVICES
ENVIRONMENTAL
MANAGEMENT DEPARTMENT
2850 FAIRLANE COURT
PLACERVILLE, CALIFORNIA 95667

Client/Project

County of El Dorado
UNION MINE
WASTEWATER TREATMENT PLANT
HEADWORKS
County of El Dorado, California

File Name: 032224-S003 TO S008 — SDS Dwn. — SDS Dsgn. — KKC Chkd. — 24.03.15 YY.MM.DD

Title

TYPICAL STRUCTURAL DETAILS

Project No. 184032224 — Scale AS SHOWN

Revision 0 — Sheet 16 of 35 — Drawing No. S006

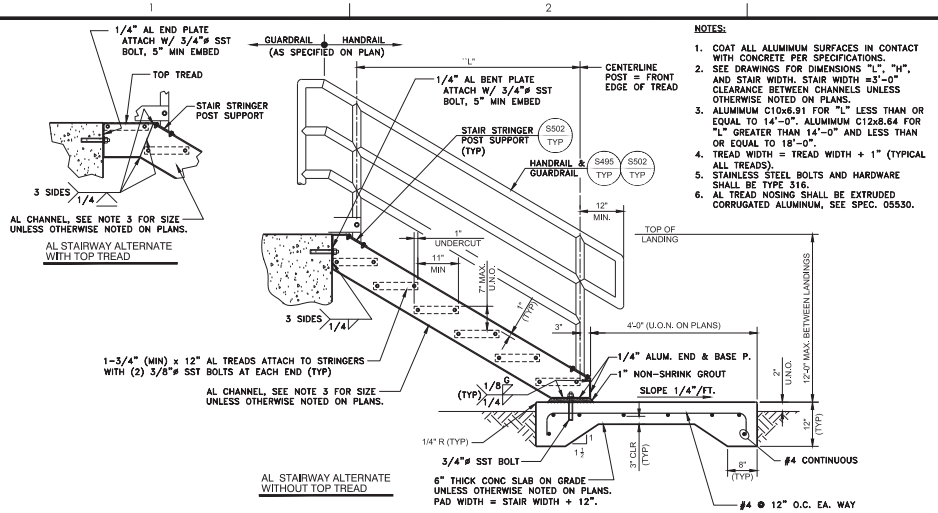

ALUMINUM STAIRWAY

SCALE: NONE

S500 TYP

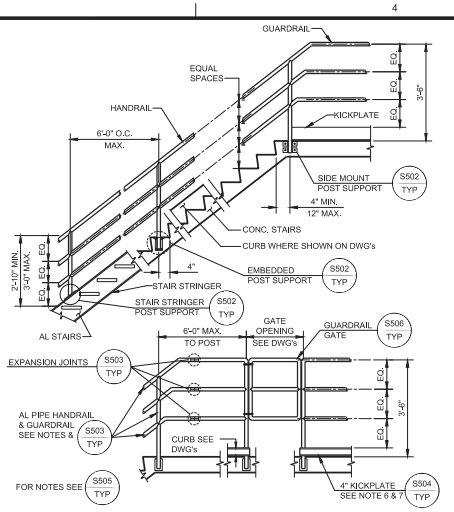

HANDRAILS / GUARDRAILS

SCALE: NONE

S501 TYP

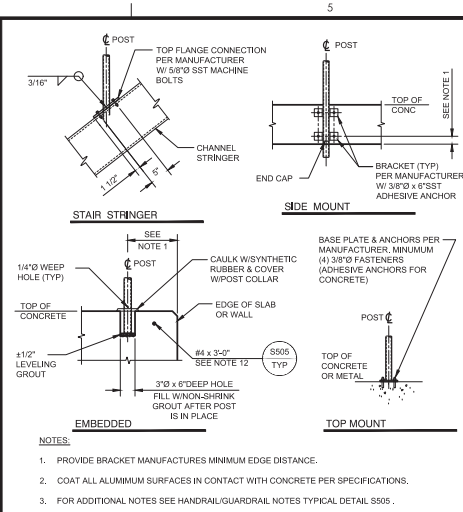

NOTES:

1. PROVIDE BRACKET MANUFACTURES MINIMUM EDGE DISTANCE.
2. COAT ALL ALUMIMUM SURFACES IN CONTACT WITH CONCRETE PER SPECIFICATIONS.
3. FOR ADDITIONAL NOTES SEE HANDRAIL/GUARDRAIL NOTES TYPICAL DETAIL S505 .

HANDRAIL / GUARDRAIL POST CONNECTIONS

SCALE: NONE

S502 TYP

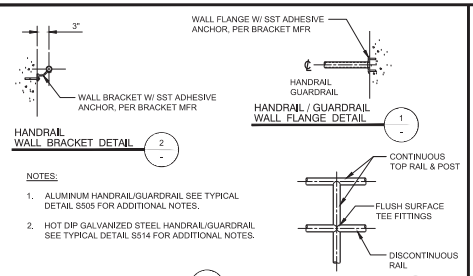

NOTES:

1. ALUMINUM HANDRAIL/GUARDRAIL SEE TYPICAL DETAIL S505 FOR ADDITIONAL NOTES.
2. HOT DIP GALVANIZED STEEL HANDRAIL/GUARDRAIL SEE TYPICAL DETAIL S514 FOR ADDITIONAL NOTES.

HANDRAIL / GUARDRAIL CONNECTIONS

SCALE: NONE

S503 TYP

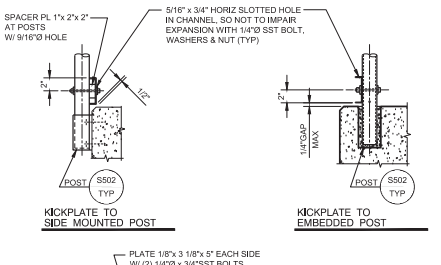

GUARDRAIL KICKPLATE

SCALE: NONE

S504 TYP

1. ALL HANDRAILS/GUARDRAILS SHALL BE ALUMINUM UNLESS OTHERWISE NOTED.
2. ALL HANDRAILS/GUARDRAILS SHALL BE IN ACCORDANCE WITH CURRENT OSHA SAFETY CODE REQUIREMENTS.
3. PLACE CENTER OF EMBEDDED POSTS 6" FROM EDGE OF CONCRETE OR 4" FROM EDGE OF CONCRETE STAIR NOSING UNLESS OTHERWISE INDICATED ON THE DRAWINGS.
4. PLACE RAIL POSTS OPPOSITE EACH OTHER WHERE GUARDRAILS ARE PARALLEL.
5. COAT ALL SURFACES OF ALUMINUM THAT COME IN CONTACT WITH CONCRETE IN ACCORDANCE WITH SPECIFICATIONS. PLACE NEOPRENE GASKET BETWEEN ALUMINUM AND STEEL.
6. PROVIDE SLIP JOINTS AT 24' MAXIMUM CENTERS FOR EXPANSION OF RAILS AND KICKPLATE. LOCATE RAIL SLIP JOINTS AT FACE OF POST. GAP AT TIME OF INSTALLATION SHALL BE BASED ON THE TEMPERATURE OF THE HANDRAIL (3/8"GAP AT 25°F, 0"GAP AT 100°F). AT CONCRETE EXPANSION JOINTS, PROVIDE MINIMUM OF 1" GAP IN SLIP JOINTS BUT NOT LESS THAN WIDTH OF CONCRETE EXPANSION JOINT. INSERT SLEEVES SHALL BE LONG ENOUGH TO ALLOW FOR THE FULL RANGE OF MOVEMENT.
7. PROVIDE KICKPLATE AT ALL LOCATIONS EXCEPT SLOPING GUARDRAILS ON STAIRS AND HANDRAIL MOUNTED ON 6" MINIMUM HIGH CURB. KICKPLATE MATERIAL SHALL BE SAME AS HANDRAIL/GUARDRAIL AND ATTACHED WITH SST BOLTS IN 5/16"Ø x 3/4"Ø SLOTTED HOLES. BOLT KICKPLATE TO POST WITH BOTTOM 1/4" CLEAR FROM SURFACE. FOR SIDE MOUNTED HANDRAIL, PROVIDE STANDARD SPACER BLOCK BETWEEN POST AND KICKPLATE TO MAINTAIN 1/4" MAXIMUM CLEAR SPACING. HAND TIGHTEN AND CENTER PUNCH BOLTS TO LOCK. SHALL ACCOMMODATE TEMPERATURE EXPANSION PER NOTE 6.
8. WHERE HANDRAILS ARE NOT CONTINUOUS BETWEEN FLIGHTS, THE HANDRAIL SHALL EXTEND HORIZONTALLY AT LEAST 12" BEYOND THE TOP RISER AND CONTINUE TO SLOPE FOR THE DEPTH OF ONE TREAD BEYOND THE BOTTOM RISER, AT RAMPS WHERE HANDRAILS ARE NOT CONTINUOUS BETWEEN RUNS, THE HANDRAILS SHALL EXTEND HORIZONTALLY ABOVE THE LANDING 12" MINIMUM BEYOND THE TOP AND BOTTOM OF RAMP RUNS.
9. ALL GUARDRAILS SHALL BE FIXED UNLESS OTHERWISE INDICATED ON THE DRAWINGS.
10. HANDRAILS ALONG WALLS SHALL BE SINGLE RAIL WITH TOP OF RAIL AT 2'-10" HIGH ABOVE LANDINGS OR TREAD NOSINGS, OR TO MATCH TOP RAIL ON OPPOSITE SIDE WHERE HANDRAIL IS INTEGRAL WITH TOP OF GUARDRAIL. HANDRAILS ALONG WALLS SHALL BE FASTENED WITH STANDARD WALL BRACKETS PER HANDRAIL/GUARDRAIL MANUFACTURER AT 5'-0" ON CENTER MAXIMUM. END OF RAILS SHALL HAVE CLOSURES.
11. FOR RAIL POSTS MOUNTED TO BEAM OR STAIR CHANNEL, PROVIDE MANUFACTURERS REINFORCED CONNECTION FROM POST TO PLATE, PLATE AND REINFORCED INSERTS SHALL BE ALUMINUM OR STAINLESS STEEL.
12. PROVIDE #4 x 3'-0" REINFORCING BAR ADJACENT AND CENTERED AT EVERY EMBEDDED POST IF LONGITUDINAL REINFORCING DOES NOT PASS BETWEEN POST POCKET AND EDGE OF CONCRETE.
13. CONTRACTOR TO PROVIDE CALCULATIONS STAMPED BY A CIVIL OR STRUCTURAL ENGINEER LICENSED IN THE STATE OF CALIFORNIA FOR ALL HANDRAIL AND GUARDRAIL.

HANDRAIL / GUARDRAIL NOTES

SCALE: NONE

S505 TYP

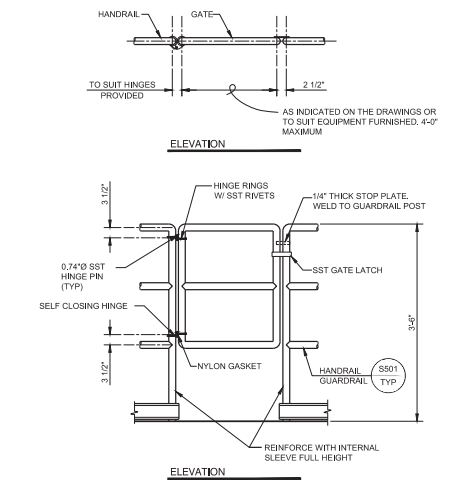

GUARDRAIL GATE

SCALE: NONE

S506 TYP

	ISSUED FOR BID	BPC	SLB	24.03.15
	Issued	By	Appd	YY.MM.DD

Permit/Seal

REGISTERED PROFESSIONAL ENGINEER — Dan Shell — No. 34131 — Exp.6-30-24 — STRUCTURAL — STATE OF CALIFORNIA

2024.03.15

Consultant

Stantec

Stantec Consulting Services Inc.
2250 Douglas Blvd., Suite 260
Roseville CA 95661
Tel:(916) 773-8100
www.stantec.com

Copyright Reserved
The Contractor shall verify and be responsible for all dimensions. DO NOT scale the drawing - any errors or omissions shall be reported to Stantec without delay.
The Copyrights to all designs and drawings are the property of Stantec. Reproduction or use for any purpose other than that authorized by Stantec is forbidden.

Client/Project Logo

COUNTY OF EL DORADO
COMMUNITY DEVELOPMENT SERVICES
ENVIRONMENTAL
MANAGEMENT DEPARTMENT
2850 FAIRLANE COURT
PLACERVILLE, CALIFORNIA 95667

Client/Project

County of El Dorado
UNION MINE
WASTEWATER TREATMENT PLANT
HEADWORKS
County of El Dorado, California

File Name: 032224-S003 TO S008

SDS	SDS	KKC	24.03.15
Dwn.	Dsgn.	Chkd.	YY.MM.DD

Title

TYPICAL STRUCTURAL DETAILS

Project No. 184032224
Scale AS SHOWN
Revision 0
Sheet 17 of 35
Drawing No. S007

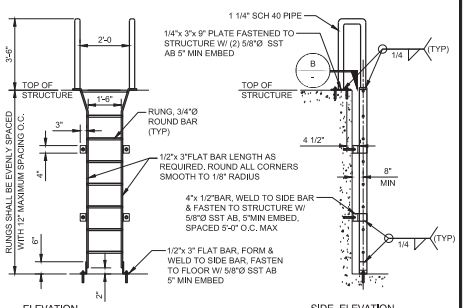

ELEVATION

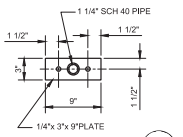

SIDE ELEVATION

SECTION B

NOTES:

1. COAT ALL SURFACES OF ALUMINUM THAT COME IN CONTACT WITH CONCRETE OR MASONRY PER SPECIFICATIONS. PLACE NEOPRENE GASKET BETWEEN ALUMINUM AND STEEL.
2. WHERE HEIGHT OF LADDER EXCEEDS 20'-0", INSTALL FALL PREVENTION SYSTEM PER SPECIFICATIONS OR SAFETY CAGE PER DETAIL S508/TYP, AS NOTED ON DRAWINGS.
3. MINIMUM CLEARANCE TO ANY OBSTRUCTION ADJACENT TO LADDER: a) 2'-6" AT CLIMBING SIDE, b) 1'-3" EACH SIDE OF CENTER LINE AT SIDES OF LADDER.

ALUMINUM LADDER FASTENED TO WALL

SCALE: NONE — S507 TYP

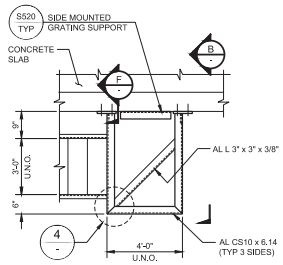

TOP LANDING PLAN 3

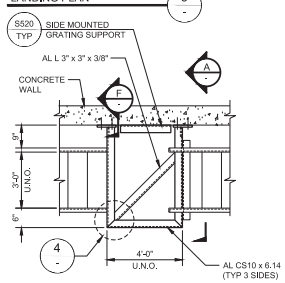

INTERMEDIATE LANDING PLAN 2

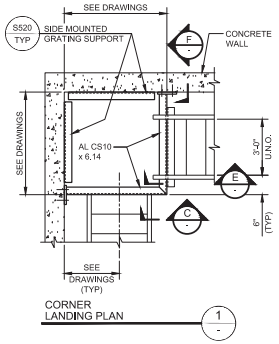

CORNER LANDING PLAN 1

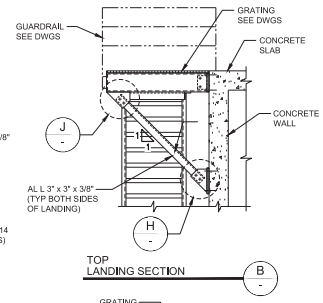

TOP LANDING SECTION B

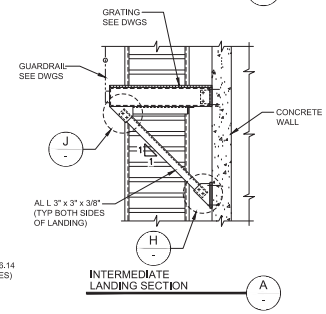

INTERMEDIATE LANDING SECTION A

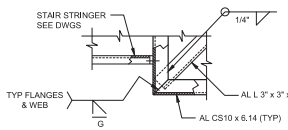

DETAIL 4

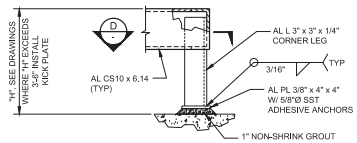

SECTION C

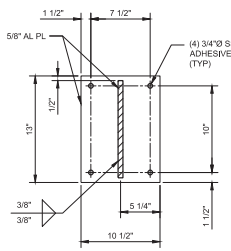

SECTION K

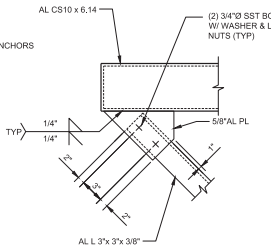

SECTION J

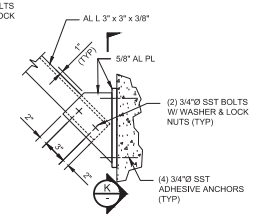

SECTION H

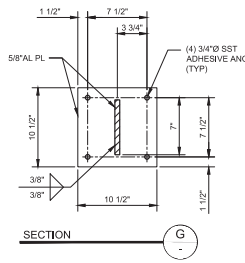

SECTION G

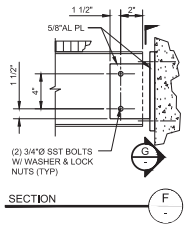

SECTION F

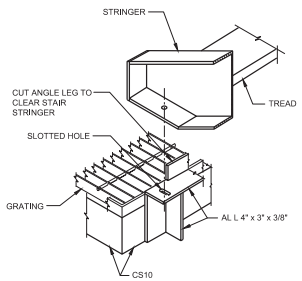

STAIR STRINGER TO PLATFORM CONNECTION DETAIL 5

NOTES:

1. COAT ALL ALUMINUM SURFACES IN CONTACT WITH CONCRETE PER SPECIFICATIONS.
2. MIN. ADHESIVE ANCHOR CONC. EMBED. EQUALS EIGHT INCHES (8").

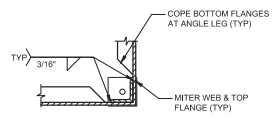

SECTION D

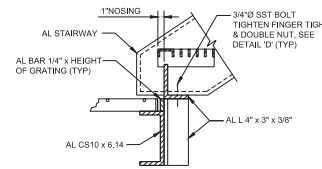

SECTION E

AL STAIR LANDINGS

SCALE: NONE — S513 TYP

ISSUED FOR BID	BPC	SLB	24.03.15
Issued	By	Appd	YY.MM.DD

Permit/Seal

REGISTERED PROFESSIONAL ENGINEER — DANIEL S. SHEN — No. C 51731 — Exp.6-30-24 — STRUCTURAL — STATE OF CALIFORNIA

2024.03.15

Consultant

Stantec

Stantec Consulting Services Inc.
2250 Douglas Blvd., Suite 260
Roseville CA 95661
Tel:(916) 773-8100
www.stantec.com

Copyright Reserved
The Contractor shall verify and be responsible for all dimensions. DO NOT scale the drawing - any errors or omissions shall be reported to Stantec without delay.
The Copyrights to all designs and drawings are the property of Stantec. Reproduction or use for any purpose other than that authorized by Stantec is forbidden.

Client/Project Logo

COUNTY OF EL DORADO
COMMUNITY DEVELOPMENT SERVICES
ENVIRONMENTAL
MANAGEMENT DEPARTMENT
2850 FAIRLANE COURT
PLACERVILLE, CALIFORNIA 95667

Client/Project

County of El Dorado
UNION MINE
WASTEWATER TREATMENT PLANT
HEADWORKS
County of El Dorado, California

File Name: 032224-S003 TO S008

SDS	SDS	KKC	24.03.15
Dwn.	Dsgn.	Chkd.	YY.MM.DD

Title

TYPICAL STRUCTURAL DETAILS

Project No. 184032224
Scale AS SHOWN
Revision 0
Sheet 18 of 35
Drawing No. S008

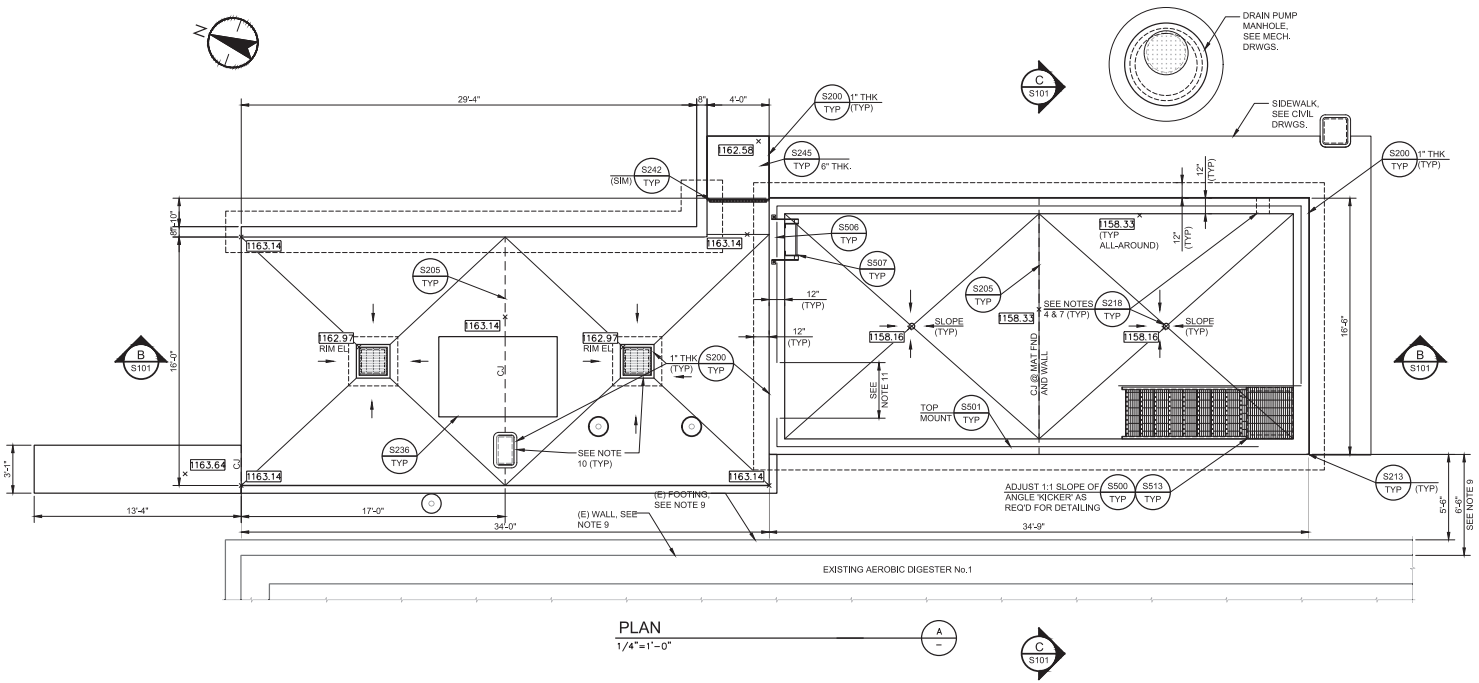

NOTES:

1. SEE GENERAL NOTES & TYP. DETAILS.
2. ALL UNCLEAR AND/OR MISSING DETAILS SHALL BE BROUGHT TO THE ENGINEER'S ATTENTION BEFORE PROCEEDING WITH CONSTRUCTION.
3. SEE SPECS. & GEOTECHNICAL REPORT FOR STRIPPING, EXCAVATION, OVER-EXCAVATION, SCARIFICATION, GEOTECHNICAL ENGINEER REVIEW, COMPACTION, ENGINEERED FILL, MOISTURE CONDITIONING AND SUB-BASE.
4. FOR LOCATION OF PIPING SEE MECH. DRWGS. M100-M101. SEE S216/TYP, S217/TYP & S218/TYP. FOR CONCRETE ENCASEMENT OF PIPES SEE S240/TYP. ALL PIPES HAVE NOT BEEN SHOWN FOR CLARITY.
5. EXISTING CONDITIONS (DIMENSIONS, ELEVATIONS, ETC.) ARE TO BE FIELD VERIFIED PRIOR TO CONSTRUCTION. THE ENGINEER MUST BE NOTIFIED IMMEDIATELY IF ANY CONFLICTS OCCUR BETWEEN THE EXISTING CONDITIONS AND NEW CONSTRUCTION.
6. CONTRACTOR TO COORD. W/ EQUIPMENT MANUFS. SIZE, ELEVATIONS AND LOCATION OF EQUIPMENT BASES (TYP. U.N.O.). SIZE OF EQUIPMENT BASES TO TAKE INTO ACCOUNT EDGES DIST. REQUIREMENTS FOR EQUIP. ANCHORAGE DESIGN. EQUIPMENT MANUFS. TO PROVIDE DETAILS AND CALCULATIONS STAMPED BY A REGISTERED CALIFORNIA STRUCTURAL OR CIVIL ENGINEER. SEE SPECS. 01610 & 01615 FOR ADD'L INFO. SUBMIT DRAWINGS AND CALCULATIONS FOR REVIEW PRIOR TO POUR OF MAT FND. SO THAT EQUIPMENT BASE DOWELS CAN BE LOCATED. SEE MECH. & ELEC. DRWGS FOR LOCATIONS. DIMENSIONS SHOWN ARE FOR BIDDING PURPOSES ONLY. ELEC. EQUIP. SHALL BE PLACED ON A 5" MIN. THICK REINF. CONC. HOUSEKEEPING PAD. REINFORCING SHALL BE #4@12" EW. ANCHORS SHALL PENETRATE 5" HOUSEKEEPING PAD AN ANCHOR INTO MAT SLAB BELOW HOUSEKEEPING PAD. EMBED. DEPTH OF ANCHORS SHALL NOT TAKE INTO ACCOUNT 5" THICK HOUSEKEEPING PAD.
7. CONTRACTOR TO COORD. W/ EQUIMPENT, DISTRIBUTION SYSTEMS, ETC. MANUFS. TO PROVIDE DETAILS AND CALCULATIONS, STAMPED BY A REGISTERED CA. STRUCTURAL OR CIVIL ENGINEER, FOR SUPPORT SYSTEMS. SUPPORT SYSTEMS SHOWN ON DETAILS AND/OR DRWGS ARE MINIMUMS (INCLUDING SPACING). SEE SPECS. 01610 AND 01615 FOR ADD'L INFO.
8. XXX.XX' DENOTES TO CONC. ELEVS.
9. SEE SPECS. AND MECH. DRWGS. FOR SHORING REQUIREMENTS.
10. PRECAST CONCRETE DI AND UTILITY BOXES, SEE MECH. DRWGS. FOR QUANTITIES AND LOCATIONS. AT CONC. PENETRATION, SEE S216/TYP FOR ADD'L REINF.
11. GUARDRAIL OPENING FOR PIPING, SEE MECH. DRWGS. FOR LOCATIONS, MAX. CLEARANCE FROM PIPING TO GUARDRAIL = 3".

	ISSUED FOR BID	BPC	SLB	24.03.15
Issued		By	Appd	YY.MM.DD

Permit/Seal

REGISTERED PROFESSIONAL ENGINEER — DAVID SHEN — No. 30131 — Exp.6-30-24 — STRUCTURAL — STATE OF CALIFORNIA

2024.03.15

Consultant

Stantec

Stantec Consulting Services Inc.
2250 Douglas Blvd., Suite 260
Roseville CA 95661
Tel:(916) 773-8100
www.stantec.com

Copyright Reserved
The Contractor shall verify and be responsible for all dimensions. DO NOT scale the drawing - any errors or omissions shall be reported to Stantec without delay.
The Copyrights to all designs and drawings are the property of Stantec. Reproduction or use for any purpose other than that authorized by Stantec is forbidden.

Client/Project Logo

COUNTY OF EL DORADO
COMMUNITY DEVELOPMENT SERVICES
ENVIRONMENTAL
MANAGEMENT DEPARTMENT
2850 FAIRLANE COURT
PLACERVILLE, CALIFORNIA 95667

Client/Project

County of El Dorado
UNION MINE
WASTEWATER TREATMENT PLANT
HEADWORKS
County of El Dorado, California

File Name: 032224-S100 | SDS Dwn. | SDS Dsgn. | Chkd. | 24.03.15 YY.MM.DD

Title

NEW HEADWORKS PLAN

Project No.	Scale
184032224	AS SHOWN
Revision	Sheet / Drawing No.
0	19 of 35 — S100

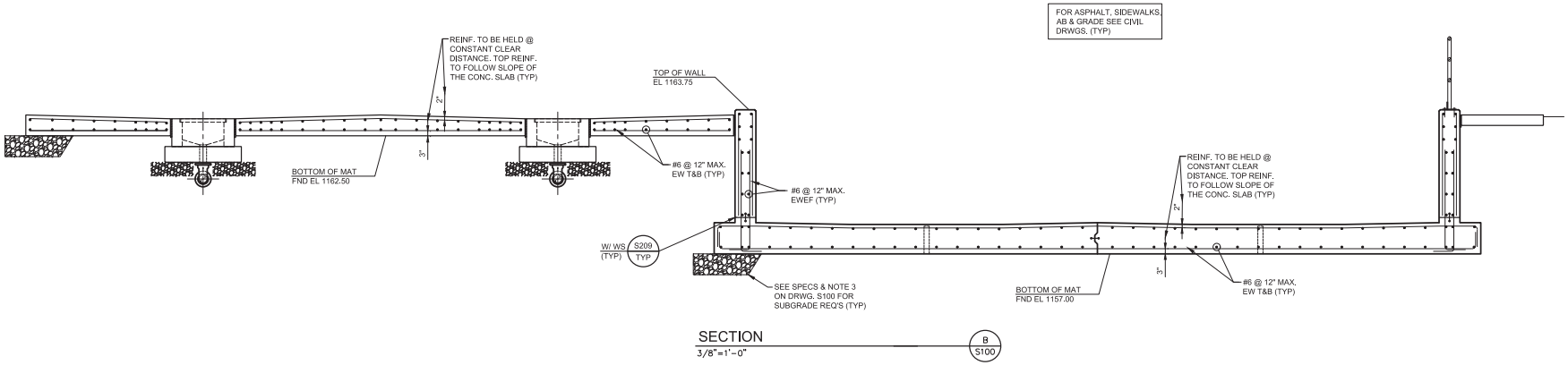

SECTION B S100
3/8"=1'-0"

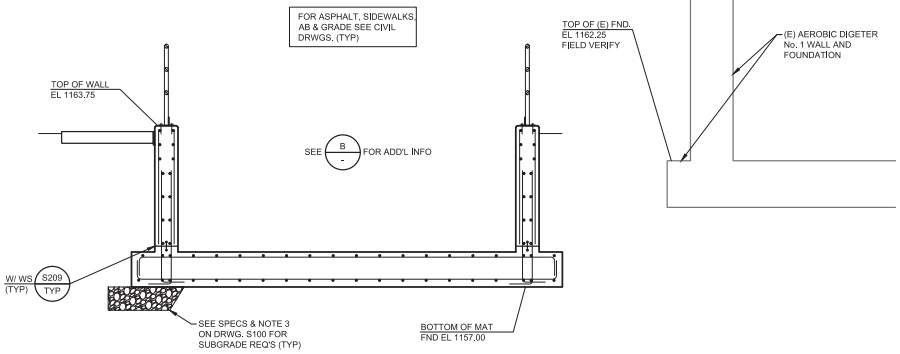

SECTION C S100
3/8"=1'-0"

ISSUED FOR BID — BPC By — SLB Appd — 24.03.15 YY.MM.DD
Issued

Permit/Seal
REGISTERED PROFESSIONAL ENGINEER — DANIEL S. SHEU — No. S-8731 — Exp.6-30-24 — STRUCTURAL — STATE OF CALIFORNIA
2024.03.15

Consultant

Stantec
Stantec Consulting Services Inc.
2250 Douglas Blvd., Suite 260
Roseville CA 95661
Tel:(916) 773-8100
www.stantec.com

Copyright Reserved
The Contractor shall verify and be responsible for all dimensions. DO NOT scale the drawing - any errors or omissions shall be reported to Stantec without delay.
The Copyrights to all designs and drawings are the property of Stantec. Reproduction or use for any purpose other than that authorized by Stantec is forbidden.

Client/Project Logo

COUNTY OF EL DORADO
COMMUNITY DEVELOPMENT SERVICES
ENVIRONMENTAL
MANAGEMENT DEPARTMENT
2850 FAIRLANE COURT
PLACERVILLE, CALIFORNIA 95667

Client/Project
County of El Dorado
UNION MINE
WASTEWATER TREATMENT PLANT
HEADWORKS
County of El Dorado, California

File Name: 032224-S100 — SDS Dwn. — SDS Dsgn. — Chkd. — 24.03.15 YY.MM.DD

Title
NEW HEADWORKS SECTION

Project No. 184032224
Scale AS SHOWN
Revision 0
Sheet 20 of 35
Drawing No. S101

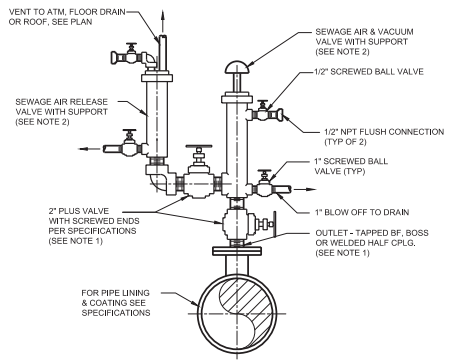

NOTES:

1. OUTLET AND ECCENTRIC PLUG VALVE SHOULD BE SUITABLE FOR 150 PSI PRESSURE MINIMUM. INCREASE PRESSURE RATING AS REQUIRED TO MATCH PIPING SYSTEM TEST PRESSURE.
2. VALVE SIZE PER SPECIFICATIONS OR AS INDICATED ON DRAWINGS.

SEWAGE AIR-RELEASE / VACUUM VALVE

SCALE: NONE — M108 TYP

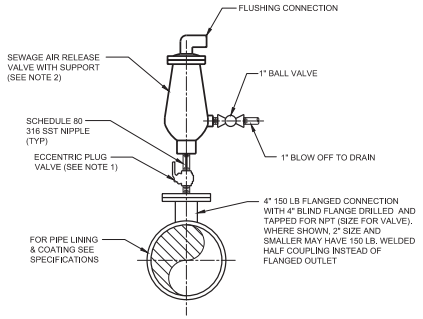

NOTES:

1. FLANGED OUTLET AND ECCENTRIC PLUG VALVE SHOULD BE SUITABLE FOR 150 PSI PRESSURE MINIMUM. INCREASE PRESSURE RATING AS REQ'D TO MATCH PIPING SYSTEM TEST PRESSURE.
2. VALVE SIZE PER SPECIFICATIONS OR AS INDICATED ON DRAWINGS.

SEWAGE AIR-RELEASE VALVE

SCALE: NONE — M112 TYP

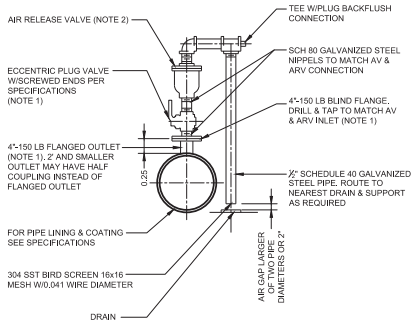

NOTES:

1. FLANGED OUTLET AND ECCENTRIC PLUG VALVE SHOULD BE SUITABLE FOR 150 PSI PRESSURE MINIMUM. INCREASE PRESSURE RATING AS REQUIRED TO MATCH PIPING SYSTEM TEST PRESSURE.
2. VALVE SIZE PER SPECIFICATIONS OR AS INDICATED ON DRAWINGS.

AIR RELEASE FOR 3" AND SMALLER VALVE ASSEMBLY

SCALE: NONE — M114 TYP

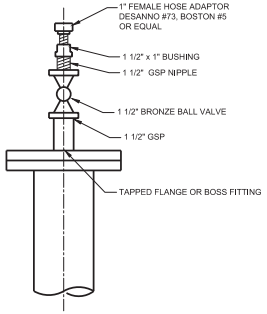

FLUSHING CONNECTION

SCALE: NONE — M142 TYP

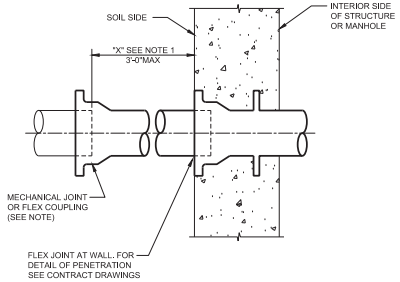

NOTES:

1. "X" = 18 INCHES OF PIPE OR INSIDE DIAMETER, WHICHEVER IS GREATER.

TYPICAL PIPING CONNECTION AT MANHOLE OR STRUCTURE

SCALE: NONE — M300 TYP

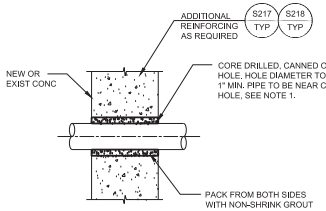

NOTES:

1. FOR ELEVATED FLOOR PENETRATIONS, WRAP WITH 3/8" THICK, 60 DUROMETER RUBBER SHEETING BEFORE POURING CONCRETE. SECURE TO PIPE WITH (2) STEEL BANDS.

GROUTED PIPE PENETRATION

SCALE: NONE — M301 TYP

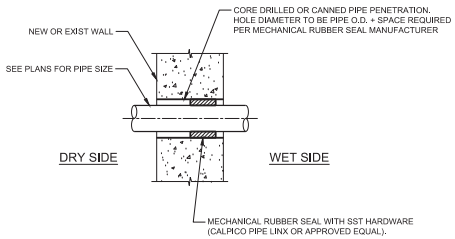

NOTES:

1. CAULK WET SIDE OF MECHANICAL SEAL FLUSH WITH WALL.
2. FOR WALLS THICKER THAN 12" PROVIDE (2) MECHANICAL RUBBER SEALS AND CAULK BOTH SIDES OF MECHANICAL SEAL FLUSH WITH WALL.

PIPE PENETRATION WITH RUBBER SEAL

SCALE: NONE — M302 TYP

Revision	By	Appd.	YY.MM.DD
ISSUED FOR BID	BPC	SLB	24.03.15
Issued	By	Appd	YY.MM.DD

Permit/Seal



2024.03.15

Consultant

Stantec

Stantec Consulting Services Inc.
2250 Douglas Blvd., Suite 260
Roseville CA 95661
Tel:(916) 773-8100
www.stantec.com

Copyright Reserved
The Contractor shall verify and be responsible for all dimensions. DO NOT scale the drawing - any errors or omissions shall be reported to Stantec without delay. The Copyrights to all designs and drawings are the property of Stantec. Reproduction or use for any purpose other than that authorized by Stantec is forbidden.

Client/Project Logo

COUNTY OF EL DORADO
COMMUNITY DEVELOPMENT SERVICES
ENVIRONMENTAL MANAGEMENT DEPARTMENT
2850 FAIRLANE COURT
PLACERVILLE, CALIFORNIA 95667

Client/Project

County of El Dorado
UNION MINE
WASTEWATER TREATMENT PLANT
HEADWORKS
County of El Dorado, California

File Name: 032224-M001 TO M006 | ASB Dwn. | BPC Dsgn. | SLB Chkd. | 24.03.15 YY.MM.DD

Title

TYPICAL MECHANICAL DETAILS 1

Project No. 184032224 | Scale AS SHOWN
Revision 0 | Sheet 21 of 35 | Drawing No. M001

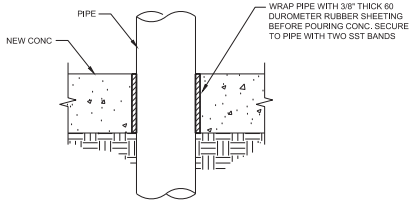

SLAB ON GRADE PIPE PENETRATION

SCALE: NONE

M303 TYP

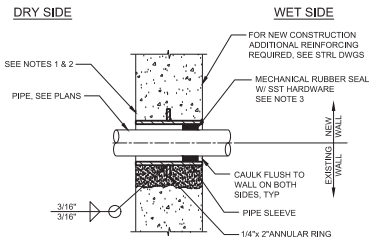

NOTES:

1. FOR EXISTING WALLS, CHIP OUT OPENING AS REQUIRED (MINIMUM 1/4" SURFACE AMPLITUDE FOR EPOXY GROUT ADHESION) CUT MINIMUM REBAR REQUIRED FOR WALL SLEEVE. COAT CONCRETE SURFACE WITH EPOXY BONDING AGENT AND GROUT IN SLEEVE WITH NON-SHRINK GROUT.
2. FOR NEW CONSTRUCTION, SLEEVES SHALL BE CAST INTO WALL. BLOCKOUTS AND SUBSEQUENT GROUTING IN OF SLEEVES WILL NOT BE PERMITTED UNLESS A KEYED WATERSTOP JOINT IS PROVIDED.
3. IN WALLS THICKER THAN 12", MECHANICAL RUBBER SEAL (LINK SEAL OR EQUAL) SHALL BE INSTALLED AT BOTH ENDS OF WALL SLEEVE. SLEEVE DIAMETER SHALL BE PER SEAL MANUFACTURER'S RECOMMENDATION. SUPPORT PIPE INDEPENDENTLY WHILE INSTALLING PIPE AND SEAL.
4. SEE SPECIFICATIONS FOR SLEEVE WALL THICKNESS.
5. SLEEVES SHALL BE HOT-DIP GALVANIZED AFTER FABRICATION.

WALL SLEEVE PENETRATION DETAIL

SCALE: NONE

M305 TYP

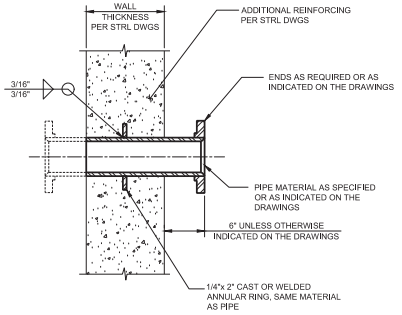

WALL PIPE PENETRATION DETAIL

SCALE: NONE

M306 TYP

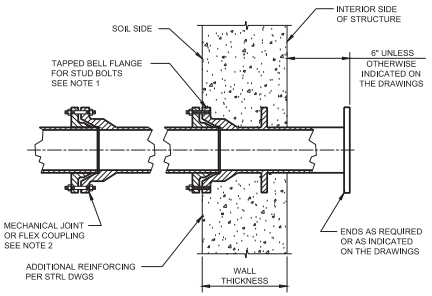

NOTES:

1. FILL TAPPED HOLES WITH CORK OR SPONGE RUBBER TO PREVENT FILLING WITH CONCRETE.
2. MECHANICAL JOINT (MJ) OR FLEX COUPLING (FC) AT EDGE OF EXCAVATION OR 3'-0" MAX FROM STRUCTURE. IF EDGE OF EXCAVATION IS GREATER THAN 6' FROM STRUCTURE, PROVIDE SECOND MJ OR FC AT EDGE OF EXCAVATION. PROVIDE SECOND MJ OR FC WHETHER OR NOT SHOWN ON PLANS.

MECHANICAL JOINT WALL PIPE DETAIL

SCALE: NONE

M307 TYP

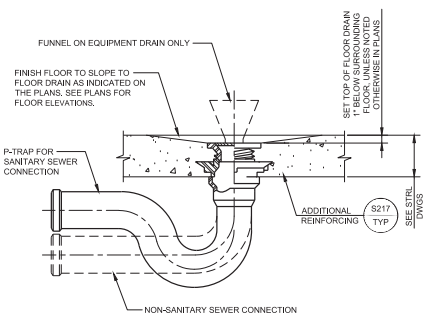

NOTES:

1. WHEN DRAINING INTO SANITARY SEWER TRAP IS REQUIRED. WHEN TRAP IS REQUIRED, A VENT MUST BE INSTALLED DOWNSTREAM OF TRAP.
2. PROVIDE 12" RADIUS SLOPE TO EQUIPMENT DRAINS WHERE FLOOR DOES NOT SLOPE TO DRAIN.

FLOOR OR EQUIPMENT DRAIN

SCALE: NONE

M330 TYP

PIPE SUPPORT NOTES:

1. WHERE NO REFERENCE TO PIPE HANGERS OR SUPPORTS IS INDICATED ON THE DRAWINGS, THE CONTRACTOR SHALL USE THE APPROPRIATE HANGER OR SUPPORT SHOWN ON THE TYPICAL DETAILS. MAXIMUM HANGER AND SUPPORT SPACING SHALL BE AS SHOWN IN SCHEDULE "A" ON THIS DRAWING. FIGURE NUMBERS ARE B-LINE, UNISTRUT OR GRINNELL.
2. ALL CONCRETE INSERTS, BRACKETS, CHANNELS BOLTS, RODS, AND MISCELLANEOUS HARDWARE USED FOR PIPE HANGERS OR SUPPORTS SHALL BE STAINLESS STEEL IF SUPPORTS ARE SUBMERGED OR LOCATED BELOW THE TOP OF WALL IN WATER BEARING STRUCTURES. IN OTHER AREAS, UNLESS NOTED OTHERWISE, SUPPORTS SHALL BE HOT DIP GALVANIZED.
3. CONCRETE CONTINUOUS INSERTS, B-LINE SERIES B521, OR EQUAL, SHALL BE PROVIDED IN THE WALLS AND CEILINGS ONLY WHERE SPECIFICALLY INDICATED ON THE DRAWINGS OR WHERE APPROVED BY THE ENGINEER. CONCRETE CHANNEL INSERTS SHALL NOT BE USED IN SUBMERGED LOCATIONS OR BELOW THE TOP OF WALL IN WATER BEARING STRUCTURES. INSERTS IN THE WALLS SHALL BE VERTICAL, UNLESS OTHERWISE NOTED AND SHALL BEGIN 6 INCHES ABOVE THE FLOOR AND END 6 INCHES BELOW THE CEILING. INSERTS IN THE CEILING SHALL BEGIN AND END 3 INCHES FROM WALLS AND BEAMS, WHERE PRACTICAL. THE CENTERLINES OF WALL AND CEILING INSERTS SHALL ALIGN. MAXIMUM CENTER TO CENTER SPACING OF INSERTS SHALL BE 5'-0".
4. IN AREAS OTHER THAN WALLS AND CEILINGS AS DESCRIBED IN NOTE 3, CONCRETE INSERTS SHALL BE B-LINE SERIES B3014N WITH APPROPRIATE NUT, B-LINE SERIES B5211 CHANNEL EMBEDDED ANCHOR BOLTS, OR EQUAL.
5. CONCRETE INSERTS IN AREAS BELOW WATER SURFACE OR NORMALLY SUBJECT TO SUBMERGING SHALL BE EMBEDDED ANCHOR BOLTS, OR APPROVED EQUAL.
6. SUPPORTS SHALL MEET MANUFACTURERS STANDARDIZATION SOCIETY OF THE VALVE AND FITTINGS INDUSTRY STANDARD PRACTICE SP58, LATEST EDITION.
7. HANGER BRACKET AND SUPPORT COMPONENTS MAY BE INTERCHANGED AS APPROVED BY THE ENGINEER.
8. TRAPEZE AND PIPE RACK COMPONENTS SHALL HAVE A MINIMUM STEEL THICKNESS OF 12 GAUGE, MAXIMUM DEFLECTION SHALL BE LIMITED TO 1/240 OF THE SPAN OR AS RECOMMENDED BY THE MANUFACTURER, WHICHEVER IS MORE STRINGENT. CHANNEL COMPONENTS SHALL BE B-LINE SERIES B22 OR B22A, OR EQUAL.
9. ALL PIPING, DUCTWORK, ACCESSORIES, APPURTENANCES, ETC. SHALL BE ANCHORED TO RESIST LOADS DEFINED IN SPECIFICATION SECTIONS 01610 AND 01615 WITHOUT EXCESSIVE DEFLECTION.
10. CONTRACTOR SHALL VERIFY ALL SUPPORT DIMENSIONS AND LOCATIONS WITH APPROVED SHOP DRAWINGS FOR ITEMS BEING SUPPORTED BEFORE FABRICATION OR INSTALLATION OF SUPPORTS.
11. FIELD PAINT ALL GALVANIZED STEEL IN ACCORDANCE WITH THE SPECIFICATIONS.
12. FOR STAINLESS STEEL PIPE, ALL PIPE SUPPORT MATERIALS SHALL BE TYPE "L" STAINLESS STEEL.

SCHEDULE "A"

PIPE HANGER RODS AND SUPPORT SPACING

PIPE SIZE	ROD SIZE (INCHES)	MAX. SPAN (FT.) STEEL PIPE	COPPER PIPE	PVC PIPE	DUCTILE IRON PIPE	FIBERGLASS
UP TO 1"	3/8	5	5	4	-	8
1 1/4" TO 2"	3/8	7	8	4.5	8	8
2 1/2" TO 3 1/2"	1/2	10	8	5	8	8
4" TO 5"	5/8	10	-	6	8	10
6"	3/4	10	-	7	8	10
8" TO 12"	7/8	10	-	7	8	10
ABOVE 12"	1	10	-	7	8	10

13. IF SUPPORT IS SUBMERGED OR LOCATED BELOW THE TOP OF WALL IN WATER BEARING STRUCTURE, MATERIAL FOR ENTIRE SUPPORT (INCLUDING ANCHOR BOLTS, PIPE, AND BRACKETS) SHALL BE STAINLESS STEEL. IN ALL OTHER AREAS, MATERIAL FOR ANCHOR BOLTS, PIPE, AND BRACKETS SHALL BE HOT-DIP GALVANIZED STEEL, UNLESS OTHERWISE NOTED ON THE DRAWINGS.
14. THESE TYPICAL DETAILS ARE TO BE USED FOR GENERAL GUIDANCE AND LAYOUT FOR SUPPORT SYSTEMS. SUPPORT SYSTEMS SHOWN ON DETAILS AND OR DRAWINGS ARE MINIMUMS, INCLUDING SPACING. DESIGN FOR THESE SUPPORT SYSTEMS SHALL BE PROVIDED IN A SUBMITTAL. SUBMITTAL SHALL INCLUDE DETAILS AND CALCULATIONS STAMPED AND SIGNED BY A CIVIL OR STRUCTURAL ENGINEER REGISTERED IN THE STATE OF CALIFORNIA.
15. ALL SUBMERGED PIPING AND ASSOCIATED SUPPORTS SHALL ACCOUNT FOR HYDRODYNAMIC LOADING, APPLIED APPROPRIATELY TO OUTSIDE SURFACES, IN ACCORDANCE WITH ASCE 7 SEISMIC REQUIREMENTS AND AS SPECIFIED IN SECTION 01610. SEE HYDRAULIC PROFILE AND/OR MECHANICAL SHEET FOR WATER SURFACE ELEVATIONS.

PIPE SUPPORT - NOTES & SCHEDULE

SCALE: NONE

M400 TYP

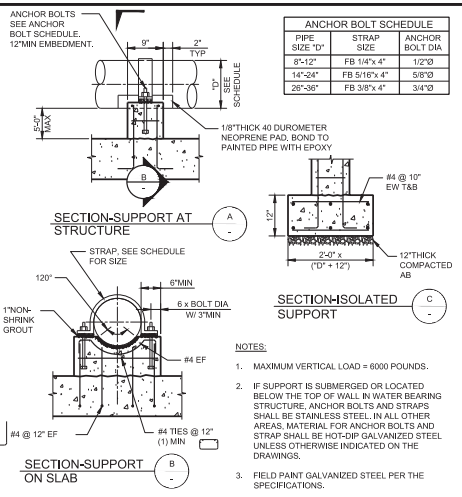

ANCHOR BOLT SCHEDULE		
PIPE SIZE "D"	STRAP SIZE	ANCHOR BOLT DIA
8"-12"	FB 1/4"x 4"	1/2"Ø
14"-24"	FB 5/16"x 4"	5/8"Ø
26"-36"	FB 3/8"x 4"	3/4"Ø

NOTES:

1. MAXIMUM VERTICAL LOAD = 6000 POUNDS.
2. IF SUPPORT IS SUBMERGED OR LOCATED BELOW THE TOP OF WALL IN WATER BEARING STRUCTURE, ANCHOR BOLTS AND STRAPS SHALL BE STAINLESS STEEL. IN ALL OTHER AREAS, MATERIAL FOR ANCHOR BOLTS AND STRAP SHALL BE HOT-DIP GALVANIZED STEEL UNLESS OTHERWISE INDICATED ON THE DRAWINGS.
3. FIELD PAINT GALVANIZED STEEL PER THE SPECIFICATIONS.

CONCRETE PIPE SUPPORT

SCALE: NONE

M401 TYP

Revision	By	Appd.	YY.MM.DD

Issued	By	Appd	YY.MM.DD
ISSUED FOR BID	BPC	SLB	24.03.15

Permit/Seal

REGISTERED PROFESSIONAL ENGINEER RUTH P. COHEN No. C70184 Exp.9/30/2024 CIVIL STATE OF CALIFORNIA

2024.03.15

Consultant

Stantec

Stantec Consulting Services Inc.
2250 Douglas Blvd., Suite 260
Roseville CA 95661
Tel:(916) 773-8100
www.stantec.com

Copyright Reserved
The Contractor shall verify and be responsible for all dimensions. DO NOT scale the drawing - any errors or omissions shall be reported to Stantec without delay.
The Copyrights to all designs and drawings are the property of Stantec. Reproduction or use for any purpose other than that authorized by Stantec is forbidden.

Client/Project Logo

COUNTY OF EL DORADO
COMMUNITY DEVELOPMENT SERVICES
ENVIRONMENTAL
MANAGEMENT DEPARTMENT
2850 FAIRLANE COURT
PLACERVILLE, CALIFORNIA 95667

Client/Project

County of El Dorado
UNION MINE
WASTEWATER TREATMENT PLANT
HEADWORKS
County of El Dorado, California

File Name: 032224-M001 TO M006

Dwn.	Dsgn.	Chkd.	YY.MM.DD
ASB	BPC	SLB	24.03.15

Title

TYPICAL MECHANICAL DETAILS 2

Project No. 184032224
Scale AS SHOWN
Revision 0
Sheet 22 of 35
Drawing No. M002

ADJUSTABLE PIPE SADDLE SUPPORT SCHEDULE DIMENSIONS IN INCHES					
SIZE OF SUPPORTED PIPE	PIPE SIZE "A"	PIPE SIZE "B"	"C"	"D" MINIMUM	"D" MAXIMUM
8	3	2 1/2	9	11 1/2	16 1/2
10	3	2 1/2	9	13 1/2	18 1/2
12	3	2 1/2	9	15	19 1/2
14	4	3	11	16 1/2	20 1/2
16	4	3	11	17 1/2	22 1/2
18	4	3 1/2	13 1/2	19 1/2	24
20	4	3 1/2	13 1/2	21	25 1/2
24	6	4	13 1/2	23 1/2	28 1/2
30	6	4	13 1/2	27	31 1/2
32	6	4	13 1/2	28 1/2	32 1/2
36	6	4	13 1/2	30 1/2	34 1/2

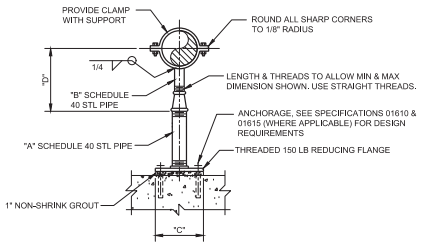

NOTES:

1. HOT-DIP GALVANIZE AFTER FABRICATION.
2. ANCHORS SHALL BE STAINLESS STEEL.

ADJUSTABLE PIPE SUPPORT (>6")

SCALE: NONE

M402 TYP

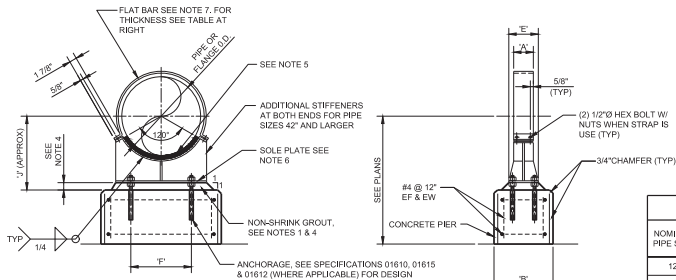

DIMENSIONS IN INCHES								
NOMINAL PIPE SIZE	"A"	"B"	"C"		"E"	FLAT BAR	SUPPORTING PIPE "F"	SUPPORTING PIPE "J"
12	4	12	3/8		6	1/4	9	13
14	4	12	3/8		6	1/4	10	14
16	4	12	3/8		6	1/4	12	15
18	4	12	3/8		6	1/4	13	16
20	5	12	3/8		6	3/8	13	17
22	5	12	3/8		6	3/8	15	18
24	5	12	3/8		6	3/8	17	19
30	5	12	3/8		6	3/8	21	22
36	6	15	1/2		6	3/8	25	25
42	6	18	1/2		8	3/8	28	28
48	6	18	1/2		8	3/8	32	31

NOTES:

1. WHERE DIFFERENTIAL SETTLEMENT IS LIKELY TO OCCUR, OMIT GROUT AS DIRECTED BY THE ENGINEER.
2. COAT ASSEMBLY AFTER FABRICATION PER SPECIFICATIONS.
3. INSTALL WITH STRAP UNLESS OTHERWISE NOTED ON THE DRAWINGS.
4. FOR PIPE 6" TO 30" GROUT SHALL BE 1-1/2"THICK. FOR PIPE 36" TO 48" GROUT SHALL BE 2"THICK.
5. UHMW FILLER ON 120° CONTACT AREA.
6. FOR THICKNESSES REFER TO THE FOLLOWING: PIPE SIZE: 12" TO 24" = 1/4"THICK, >24" = 3/8"THICK.
7. PROVIDE A 3/16" GAP BETWEEN STRAP AND PIPE PER ENGINEERS REQUEST.
8. ALL FABRICATED PLATE SHALL BE ASTM A36.
9. ALL BOLTS SHALL BE ASTM A325, GALVANIZED.

PIPE SUPPORT WITH OR WITHOUT STRAP DETAIL

SCALE: NONE

M403 TYP

ADJUSTABLE PIPE SUPPORT SCHEDULE				
SIZE OF SUPPORTED PIPE	EXTENSION PIPE SIZE "A" SCH 40	BASE PLATE SIZE	MINIMUM DIST. FROM FLANGE TO FLOOR "B"	THREADED STUD "C" DIAMETER
2	2"	4"x 6"x 1/4"	7"	1"
2 1/2	2"	4"x 6"x 1/4"	7"	1"
3	2"	4"x 6"x 1/4"	7"	1"
4	2"	4"x 6"x 1/4"	7"	1"
6	2"	4"x 6"x 1/4"	7"	1"
8	2"	4"x 6"x 1/4"	7"	1"
10	2"	4"x 6"x 1/4"	7"	1"
12	2"	4"x 6"x 1/4"	7"	1"
14	3"	8"x 8"x 1/2"	9 1/2"	1 1/2"
16	3"	8"x 8"x 1/2"	9 1/2"	1 1/2"
18	4"	8"x 8"x 1/2"	10"	2"
20	4"	8"x 8"x 1/2"	10"	2"
24	4"	8"x 8"x 1/2"	10"	2"
30	6"	13 1/2"x 13 1/2"x 1/2"	12"	2"
36	6"	13 1/2"x 13 1/2"x 1/2"	16"	2 1/2"
42	8"	16"x 16"x 1/2"	18"	2 1/2"
48	8"	16"x 16"x 1/2"	18"	2 1/2"

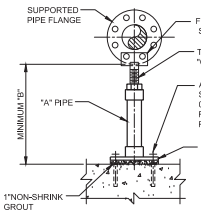

NOTES:

1. MATERIAL OF FABRICATION ASTM A35 & A53 STEEL WITH ELECTRO-GALVANIZED FINISH OR AS SPECIFIED ON THE DRAWING.
2. STANDON MODEL S89 FLANGE SUPPORT OR EQUAL. SUPPORT DOES NOT SERVE AS SEISMIC OR THRUST SUPPORT.
3. TWO BOLTS UP TO 10", 4S" THEREAFTER

ADJUSTABLE PIPE SUPPORT AT FLANGE (2" TO 48")

SCALE: NONE

M404 TYP

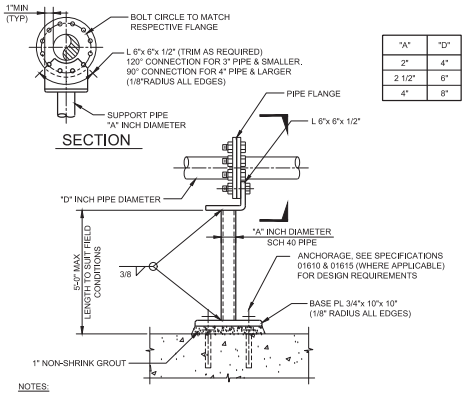

"A"	"D"
2"	4"
2 1/2"	6"
4"	8"

NOTES:

1. MAXIMUM VERTICAL LOAD = 1000 POUNDS.
2. IF SUPPORT IS SUBMERGED OR LOCATED BELOW THE TOP OF WALL IN WATER BEARING STRUCTURE, MATERIAL FOR ANCHOR BOLTS, PIPE, AND L 6" x 6" x 1/2" SHALL BE STAINLESS STEEL. IN ALL OTHER AREAS, MATERIAL FOR ANCHOR BOLTS, PIPE, AND L 6" x 6" x 1/2" SHALL BE HOT-DIP GALVANIZED STEEL UNLESS OTHERWISE INDICATED ON THE DRAWINGS.
3. FIELD PAINT GALVANIZED STEEL PER THE SPECIFICATIONS.

FLANGED PIPE SUPPORT

SCALE: NONE

M405 TYP

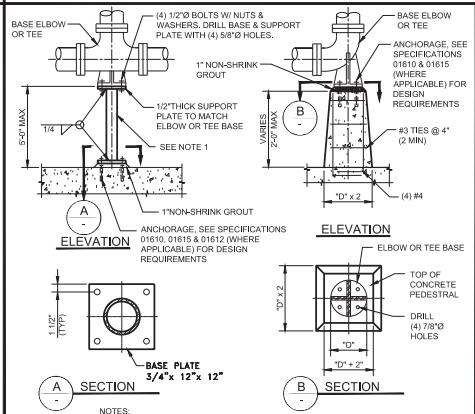

NOTES:

1. PIPE SUPPORT FOR USE WITH 8"Ø OR SMALLER PIPE.
   - FOR 8" PIPE, USE 4"Ø SCH 40 PIPE FOR SUPPORT
   - FOR 6" PIPE, USE 21/2"Ø SCH 40 PIPE FOR SUPPORT
   - FOR 4" PIPE, USE 2"Ø SCH 40 PIPE FOR SUPPORT
2. HOT-DIP GALVANIZE SUPPORT AFTER FABRICATION. FIELD PAINT IN ACCORDANCE WITH THE SPECIFICATIONS.

STEEL / DUCTILE BASE SUPPORT DETAIL

SCALE: NONE

M407 TYP

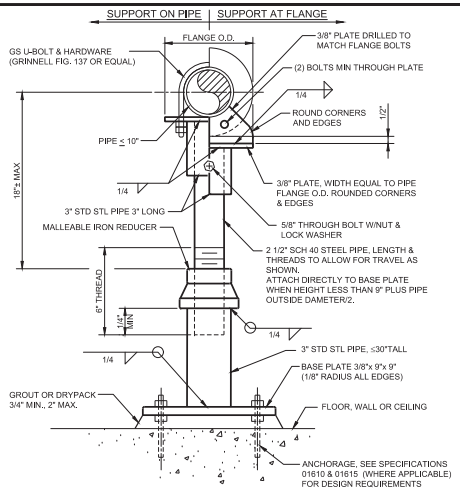

ADJUSTABLE PIPE SUPPORT (PIPE ≤ 10")

SCALE: NONE

M410 TYP

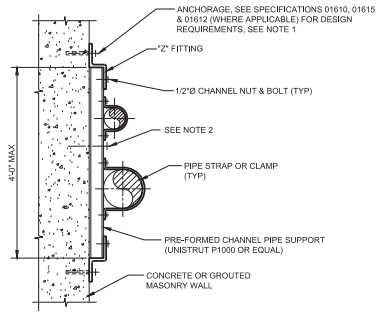

NOTES:

1. ANCHORAGE, SEE SPECIFICATIONS 01610 & 01615 (WHERE APPLICABLE) FOR DESIGN REQUIREMENTS.
2. FOR SUPPORT LENGTH GREATER THAN 2'-0" PROVIDE ADDITIONAL ANCHOR BOLT.
3. MAXIMUM PIPE SIZE 4"Ø.
4. SPACE FLUSH MOUNT PIPE SUPPORTS AT 5'-0" MAXIMUM OR AS OTHERWISE INDICATED ON THE DRAWINGS.
5. IF SUPPORT IS SUBMERGED OR LOCATED BELOW THE TOP OF WALL IN WATER BEARING STRUCTURE, ALL MATERIAL SHALL BE STAINLESS STEEL. IN ALL OTHER AREAS, MATERIALS SHALL BE HOT-DIP GALVANIZED STEEL UNLESS OTHERWISE INDICATED ON THE DRAWINGS.
6. FIELD PAINT GALVANIZED STEEL PER THE SPECIFICATIONS.

FLUSH MOUNT PIPE SUPPORT (≤ 4"Ø)

SCALE: NONE

M440 TYP

Revision	By	Appd.	YY.MM.DD

Issued	By	Appd	YY.MM.DD
ISSUED FOR BID	BPC	SLB	24.03.15

Permit/Seal

REGISTERED PROFESSIONAL ENGINEER BETH P. COHEN No. C70184 EXP. 9/30/2024 CIVIL STATE OF CALIFORNIA

2024.03.15

Consultant

Stantec

Stantec Consulting Services Inc.
2250 Douglas Blvd., Suite 260
Roseville CA 95661
Tel:(916) 773-8100
www.stantec.com

Copyright Reserved
The Contractor shall verify and be responsible for all dimensions. DO NOT scale the drawing - any errors or omissions shall be reported to Stantec without delay. The Copyrights to all designs and drawings are the property of Stantec. Reproduction or use for any purpose other than that authorized by Stantec is forbidden.

Client/Project Logo

COUNTY OF EL DORADO
COMMUNITY DEVELOPMENT SERVICES
ENVIRONMENTAL
MANAGEMENT DEPARTMENT
2850 FAIRLANE COURT
PLACERVILLE, CALIFORNIA 95667

Client/Project

County of El Dorado
UNION MINE
WASTEWATER TREATMENT PLANT
HEADWORKS
County of El Dorado, California

File Name: 032224-M001 TO M006	ASB	BPC	SLB	24.03.15
	Dwn.	Dsgn.	Chkd.	YY.MM.DD

Title

TYPICAL MECHANICAL DETAILS 3

Project No.	Scale
184032224	AS SHOWN
Revision	Sheet
0	23 of 35

Drawing No.

M003

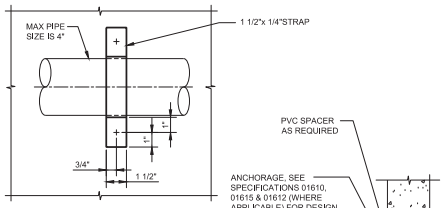

NOTES:

1. ALL MATERIAL SHALL BE STAINLESS STEEL IF SUPPORT IS SUBMERGED OR LOCATED BELOW THE TOP OF WALL IN A WATER BEARING STRUCTURE. IN ALL OTHER AREAS, THE MATERIALS SHALL BE HOT-DIP GALVANIZED STEEL UNLESS OTHERWISE INDICATED ON THE DRAWINGS.
2. FIELD PAINT GALVANIZED STEEL PER THE SPECIFICATIONS.

CLAMP PIPE SUPPORT (≤ 4"Ø)

SCALE: NONE — M441 TYP

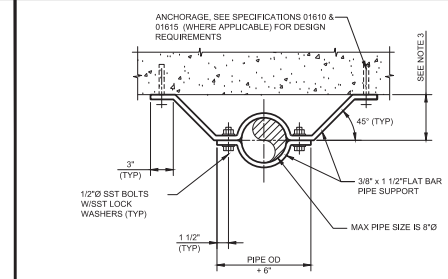

NOTES:

1. ALL MATERIAL SHALL BE STAINLESS STEEL IF SUPPORT IS SUBMERGED OR LOCATED BELOW THE TOP OF WALL IN A WATER BEARING STRUCTURE. IN ALL OTHER AREAS, THE MATERIALS SHALL BE HOT-DIP GALVANIZED STEEL UNLESS OTHERWISE INDICATED ON THE DRAWINGS.
2. FIELD PAINT GALVANIZED STEEL PER THE SPECIFICATIONS.
3. OFFSET DIMESNION SHALL BE PIPE OUTSIDE DIAMETER OR IN THE CASE OF FLANGED PIPE, THE FLANGE OUTSIDE DIAMETER / 2 + 1". UNLESS OTHERWISE NOTED ON THE DRAWINGS.

BAR STRAP PIPE SUPPORT

SCALE: NONE — M442 TYP

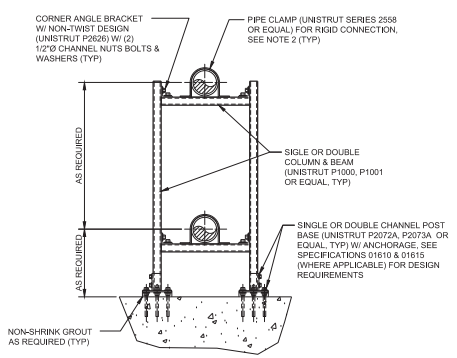

NOTES:

1. LOADS SHALL NOT EXCEED MANUFACTURER'S RECOMMENDATIONS.
2. MATERIALS OF CONSTRUCTION SHALL BE 304 STAINLESS STEEL, UNLESS INDICATED OTHERWISE ON THE DRAWINGS.
3. WHEN PIPE CLAMPS CANNOT BE USED, WITH ENGINEERS APPROVAL, BENT PLATE BOLTED TO PIPE AND CHANNEL SIMILAR TO TYPICAL DETAIL M405 MAY BE USED. (M405 TYP)

PIPE (≤ 12"Ø) & EQUIPMENT SUPPORT DETAIL

SCALE: NONE — M444 TYP

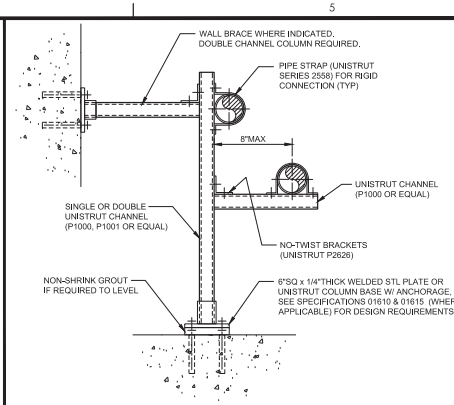

NOTES:

1. LOADS SHALL NOT EXCEED MANUFACTURER'S RECOMMENDATIONS.
2. MATERIALS OF CONSTRUCTION SHALL BE 304 STAINLESS STEEL UNLESS INDICATED OTHERWISE ON THE DRAWINGS.

COLUMN PIPE SUPPORT

SCALE: NONE — M446 TYP

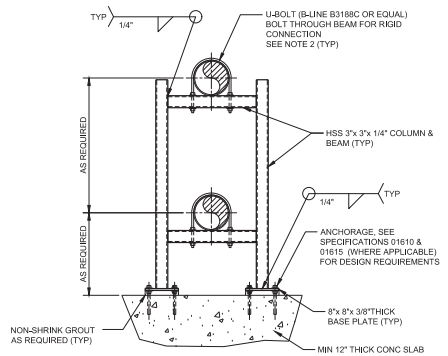

NOTES:

1. SEE PIPE SUPPORT NOTES & SCHEDULES M400/TYP. (M400 TYP)
2. MATERIALS OF CONSTRUCTION SHALL BE 304 STAINLESS STEEL, UNLESS INDICATED OTHERWISE ON THE DRAWINGS.
3. WHEN PIPE CLAMPS CANNOT BE USED, WITH ENGINEERS APPROVAL, BENT PLATE BOLTED TO PIPE AND CHANNEL SIMILAR TO TYPICAL DETAIL M405 MAY BE USED. (M405 TYP)

PIPE (> 12"Ø) & EQUIPMENT SUPPORT DETAIL

SCALE: NONE — M447 TYP

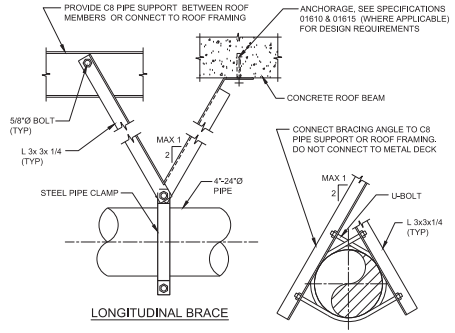

NOTES:

1. FOR PIPES LESS THAN 20' LONG, PROVIDE A MINIMUM OF ONE LONGITUDINAL AND ONE TRANSVERSE BRACE FOR ALL PIPES 4" AND LARGER.
2. FOR PIPES LONGER THAN 20'- MAXIMUM LONGITUDINAL BRACE SPACING OF 20', MAXIMUM TRANSVERSE BRACE SPACING OF 20'.
3. BRACES SHALL BE HOT DIPPED GALVANIZED UNLESS INDICATED OTHERWISE ON THE DRAWINGS SUBMIT ALL CONNECTION DETAILS TO ROOF FRAMING FOR APPROVAL PRIOR TO INSTALLATION.
4. FOR LARGER PIPES SUBMIT TO ENGINEER FOR APPROVAL.

SEISMIC BRACES

SCALE: NONE — M454 TYP

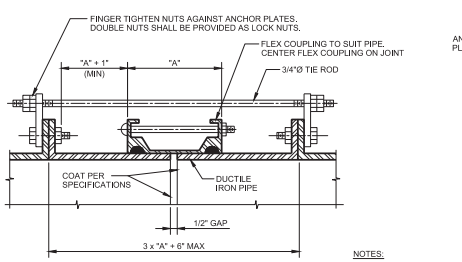

ROD SCHEDULE FOR DIP		
PIPE THRUST SEE NOTE 2	TYPE OF CONNECTION	NO RODS
0-6,000#	I	2
6,001-12,000#	II	2
12,001-18,000#	II	3
18,001-24,000#	II	4
24,001-30,000#	II	5
> 30,000 #	II	SEE NOTE 5

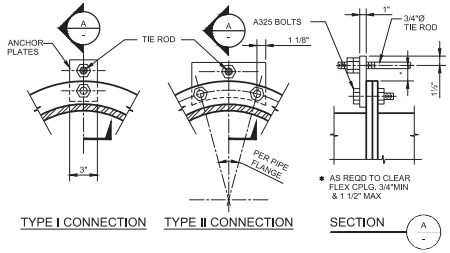

NOTES:

1. ALL EXPOSED FLEXIBLE COUPLINGS SHALL HAVE TIE RODS UNLESS SPECIFICALLY INDICATED OTHERWISE ON THE DRAWINGS.
2. CALCULATE PIPE THRUST BASED ON TEST PRESSURE.
3. PIPE THRUST = 0.7854 x D^2 x TEST PRESSURE (PSI), WHERE D IS PIPE OD IN INCHES.
4. MINIMUM YIELD STRENGTH FOR TIE ROD SHALL BE 48,000 PSI.
5. FOR THRUSTS GREATER THAN 30,000 POUNDS, ADD ONE 3/4 INCH DIAMETER ROD FOR EVERY 6,000 POUNDS INCREASING THRUST.
6. CONTRACTOR MAY USE ONE INCH DIAMETER ROD FOR THRUSTS GREATER THAN 30,000 POUNDS, NUMBER OF ONE INCH RODS = NUMBER OF 3/4 INCH RODS x 0.5625, ROUNDED OFF TO THE NEXT LARGER NUMBER.
7. ALL ROD CONNECTIONS SHALL BE TYPE II FOR THRUSTS GREATER THAN 30,000\POUNDS.
8. GRIND ALL CORNERS OF ANCHOR PLATES SMOOTH.
9. FLEXIBLE COUPLINGS SHALL BE COATED PER SPECIFICATIONS.
10. ALL BURIED MATERIALS SHALL BE STAINLESS STEEL.

DIP FLEXIBLE COUPLING TIE DOWN

SCALE: NONE — M490 TYP

Revision	By	Appd.	YY.MM.DD

Issued	By	Appd	YY.MM.DD
ISSUED FOR BID	BPC	SLB	24.03.15

Permit/Seal

REGISTERED PROFESSIONAL ENGINEER — BETH P. COHEN — No. C70184 — 5/30/2024 — CIVIL — STATE OF CALIFORNIA

2024.03.15

Consultant

Stantec
Stantec Consulting Services Inc.
2250 Douglas Blvd., Suite 260
Roseville CA 95661
Tel:(916) 773-8100
www.stantec.com

Copyright Reserved
The Contractor shall verify and be responsible for all dimensions. DO NOT scale the drawing - any errors or omissions shall be reported to Stantec without delay. The Copyrights to all designs and drawings are the property of Stantec. Reproduction or use for any purpose other than that authorized by Stantec is forbidden.

Client/Project Logo

COUNTY OF EL DORADO
COMMUNITY DEVELOPMENT SERVICES
ENVIRONMENTAL MANAGEMENT DEPARTMENT
2850 FAIRLANE COURT
PLACERVILLE, CALIFORNIA 95667

Client/Project

County of El Dorado
UNION MINE
WASTEWATER TREATMENT PLANT
HEADWORKS
County of El Dorado, California

File Name: 032224-M001 TO M006 | ASB Dwn. | BPC Dsgn. | SLB Chkd. | 24.03.15 YY.MM.DD

Title

TYPICAL MECHANICAL DETAILS 4

Project No. 184032224 | Scale AS SHOWN
Revision 0 | Sheet 24 of 35 | Drawing No. M004

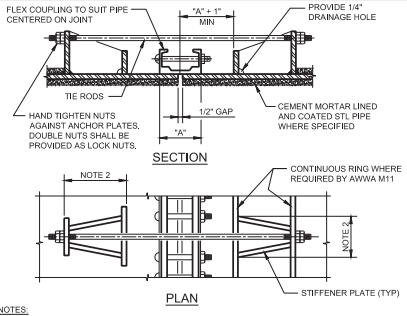

NOTES:

1. ALL EXPOSED FLEXIBLE COUPLINGS SHALL HAVE TIE RODS UNLESS SPECIFICALLY INDICATED OTHERWISE ON THE DRAWINGS.
2. DESIGN SHALL BE BASED ON TEST PRESSURE.
3. ANCHOR LUGS AND TIE RODS FOR STEEL PIPE SHALL BE DESIGNED BY PIPE MANUFACTURER IN ACCORDANCE WITH AWWA M11 STEEL PIPE MANUAL.
4. GRIND ALL CORNERS SMOOTH.
5. COAT ALL PIPE SURFACES WITH EPOXY PAINT AFTER MANUFACTURE PER SPECIFICATIONS.
6. FLEXIBLE COUPLINGS SHALL BE COATED PER SPECIFICATIONS.
7. ALL BURIED MATERIALS SHALL BE STAINLESS STEEL.

STEEL PIPE FLEXIBLE COUPLING TIE DOWN

SCALE: NONE

M491 TYP

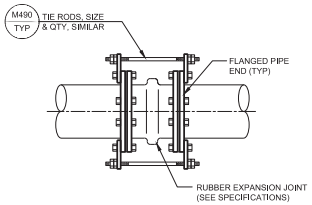

RESTRAINED FLEXIBLE RUBBER COUPLING

SCALE: NONE

M493 TYP

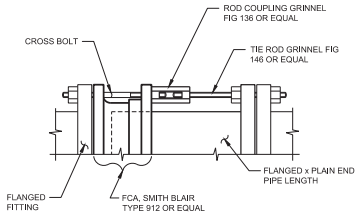

PIPE SIZE	3"	4"	6"	8"	10"	12"
TIE ROD SIZE	5/8"	5/8"	3/4"	3/4"	7/8"	7/8"
NO. OF TIE RODS	2	2	2	4	4	4

FCA WITH TIE-RODS

SCALE: NONE

M495 TYP

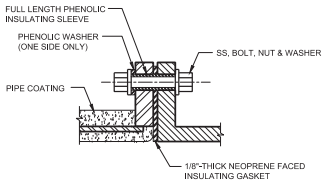

NOTES:

1. PLACE NON-INSULATED SIDE OF BOLT ON VALVE SIDE.
2. DO NOT APPLY METALLIC OR OTHER NON-METALLIC PAINTS TO INSULATING PARTS OR FLANGES.
3. INSULATING SLEEVE TO BE 1/64" SHORTER THAN DISTANCE BETWEEN STEEL WASHERS WHEN BOLT IS FULLY TIGHTENED.
4. INSULATING KIT TO BE PSI COMPANY TYPE "E" OR EQUAL.
5. COAT WITH COLD APPLIED COAL TAR MASTIC AFTER ASSEMBLING JOINT AND WRAP WITH BUTYL RUBBER ADHESIVE, POLYETHYLENE BACKED TAPE.

INSULATING FLANGE

SCALE: NONE

M496 TYP

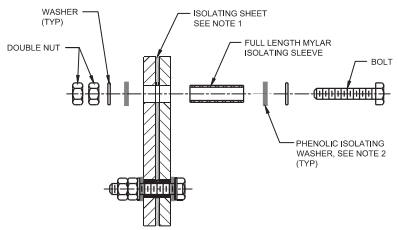

NOTES:

1. SEE PLANS FOR FASTENER AND ISOLATING SHEET MATERIALS AND SIZES.
2. PHENOLIC ISOLATING WASHER OUTSIDE DIAMETER SHALL BE WASHER O.D. +1/8"

DIELECTRIC ISOLATION FASTENER DETAIL

SCALE: NONE

M497 TYP

Revision	By	Appd.	YY.MM.DD

Issued	By	Appd	YY.MM.DD
ISSUED FOR BID	BPC	SLB	24.03.15

Permit/Seal

REGISTERED PROFESSIONAL ENGINEER BETH P. COHEN No. C70184 EXP. 9/30/2024 CIVIL STATE OF CALIFORNIA

2024.03.15

Consultant

Stantec

Stantec Consulting Services Inc.
2250 Douglas Blvd., Suite 260
Roseville CA 95661
Tel:(916) 773-8100
www.stantec.com

Copyright Reserved
The Contractor shall verify and be responsible for all dimensions. DO NOT scale the drawing - any errors or omissions shall be reported to Stantec without delay. The Copyrights to all designs and drawings are the property of Stantec. Reproduction or use for any purpose other than that authorized by Stantec is forbidden.

Client/Project Logo

COUNTY OF EL DORADO
COMMUNITY DEVELOPMENT SERVICES
ENVIRONMENTAL
MANAGEMENT DEPARTMENT
2850 FAIRLANE COURT
PLACERVILLE, CALIFORNIA 95667

Client/Project

County of El Dorado
UNION MINE
WASTEWATER TREATMENT PLANT
HEADWORKS
County of El Dorado, California

File Name: 032224-M001 TO M006	ASB	BPC	SLB	24.03.15
	Dwn.	Dsgn.	Chkd.	YY.MM.DD

Title

TYPICAL MECHANICAL DETAILS 5

Project No.	Scale
184032224	AS SHOWN
Revision	Sheet
0	25 of 35

Drawing No.

M005

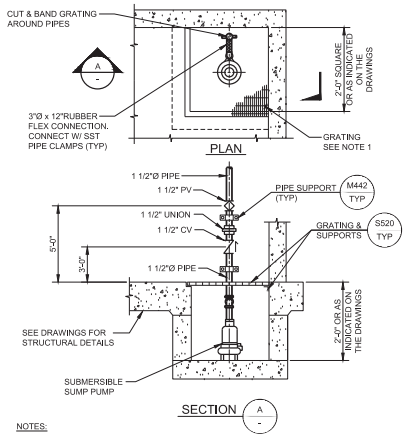

NOTES:

1. PROVIDE FIBERGLASS GRATING FOR USE IN CHEMICAL AREAS. GRATING FOR ALL OTHER AREAS SHALL BE ALUMINUM UNLESS INDICATED OTHERWISE ON THE DRAWINGS.
2. DRAIN PIPE MATERIAL PER SPECIFICATIONS.

SIMPLEX SUBMERSIBLE SUMP PUMPS

SCALE: NONE — M601 TYP

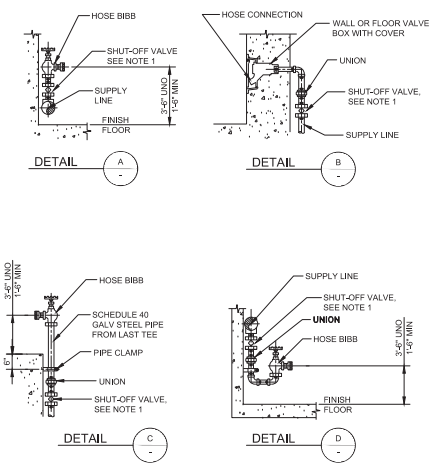

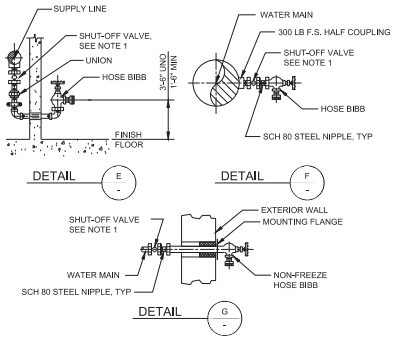

NOTES:

1. ALL HOSE BIBBS TO BE CONTROLLED BY INDIVIDUAL SHUT-OFF VALVES (BALL OR PLUG VALVES).
2. ALL SINGLE HEAD HOSE BIBB 1 1/2" ANGLE HOSE VALVE (DION AVF 1504 BRASS ANGLE VALVE, DOUBLE FEMALE OR APPROVED EQUAL) W/ 1" HOSE ADAPTER.
3. SHALL BE 1 1/2" PIPE AND VALVES W/ 1" HOSE ADAPTER UNLESS OTHERWISE SHOWN.
4. PROVIDE WARNING SIGN AT EACH HOSE BIBB, SEE TYPICAL DETAIL C251.
5. PROVIDE HOSE RACK @ EACH HOSE BIBB SEE TYPICAL DETAIL M630.
6. SEE TYPICAL DETAIL C520 FOR FREE STANDING OUTDOOR HOSE BIBBS IN YARD AREAS.

HOSE BIBBS

SCALE: NONE — M625 TYP

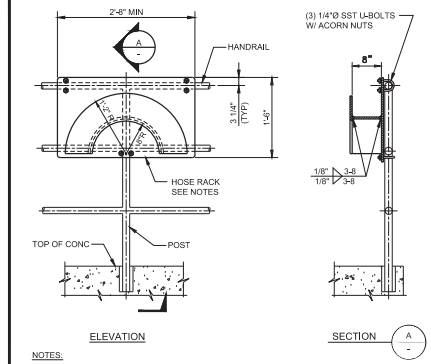

NOTES:

1. HOSE RACK SHALL BE FABRICATED FROM 1/4" ALUMINUM PLATE. ROUND SMOOTH ALL EDGES AND SHARP CORNERS.
2. HOSE RACKS INSTALLED IN YARD LOCATIONS SHALL BE MOUNTED ON POST, WITH BOTTOM 3'-0" ABOVE FINISH GRADE. POST SIMILAR TO TYPICAL MECHANICAL DETAIL M631.
3. HOSE RACKS INSTALLED IN STRUCTURES SHALL BE WALL MOUNTED. FASTEN RACK TO WALL WITH (4) 3/8"Ø SST CONCRETE ANCHORS. FOR MASONRY WALLS, FASTEN TO GROUTED CELLS.
4. EACH HOSE RACK SHALL BE SUPPLIED WITH A 50-FOOT LONG INDUSTRIAL HOSE. IN ACCORDANCE WITH THE SPECIFICATIONS.

HOSE RACK

SCALE: NONE — M630 TYP

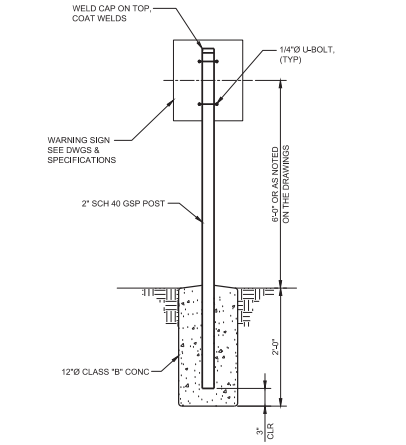

WARNING SIGN

SCALE: NONE — M631 TYP

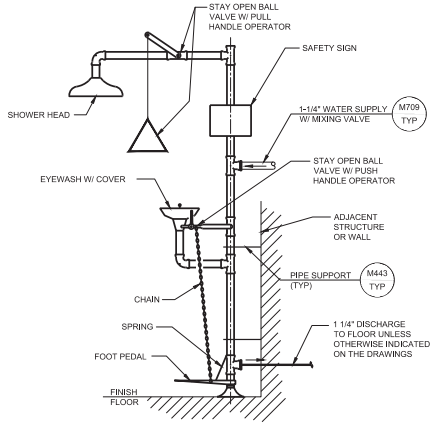

NOTES:

1. PROVIDE HEAT TRACING AND INSULATION WHERE SHOWN ON DRAWINGS.
2. PROVIDE 18'x 18"x 6"THICK CONCRETE PAD IN ASPHALT AREAS.

EMERGENCY SHOWER & EYEWASH

SCALE: NONE — M708 TYP

Revision	By	Appd.	YY.MM.DD
ISSUED FOR BID	BPC	SLB	24.03.15
Issued	By	Appd	YY.MM.DD

Permit/Seal

REGISTERED PROFESSIONAL ENGINEER — BETH P. COHEN — No. C70184 — Exp 9/30/2024 — CIVIL — STATE OF CALIFORNIA

2024.03.15

Consultant

Stantec

Stantec Consulting Services Inc.
2250 Douglas Blvd., Suite 260
Roseville CA 95661
Tel:(916) 773-8100
www.stantec.com

Copyright Reserved
The Contractor shall verify and be responsible for all dimensions. DO NOT scale the drawing - any errors or omissions shall be reported to Stantec without delay. The Copyrights to all designs and drawings are the property of Stantec. Reproduction or use for any purpose other than that authorized by Stantec is forbidden.

Client/Project Logo

COUNTY OF EL DORADO
COMMUNITY DEVELOPMENT SERVICES
ENVIRONMENTAL
MANAGEMENT DEPARTMENT
2850 FAIRLANE COURT
PLACERVILLE, CALIFORNIA 95667

Client/Project

County of El Dorado
UNION MINE
WASTEWATER TREATMENT PLANT
HEADWORKS
County of El Dorado, California

File Name: 032224-M001 TO M006 | ASB Dwn. | BPC Dsgn. | SLB Chkd. | 24.03.15 YY.MM.DD

Title

TYPICAL MECHANICAL DETAILS 6

Project No.	Scale
184032224	AS SHOWN
Revision	Sheet / Drawing No.
0	26 of 35 — M006

SHEET NOTES:

1. DURING EXCAVATION, CONTRACTOR SHALL INSTALL SHORING TO PROTECT THE EXISTING AEROBIC DIGESTER. IN ACCORDANCE WITH SPECIFICATIONS, SUBMIT SHORING DESIGN TO OWNER FOR APPROVAL. SHORING SHALL BE DESIGNED BY CALIFORNIA REGISTERED PROFESSIONAL ENGINEER (CIVIL OR STRUCTURAL ENGINEER) AND COMPLIANT WITH OSHA REQUIREMENTS.
2. INSULATE PIPES PER SPECIFICATIONS.
3. CONCRETE ENCASE ALL PIPES BELOW SLABS, IN ACCORDANCE WITH TYPICAL STRUCTURAL DETAIL S240/TYP.

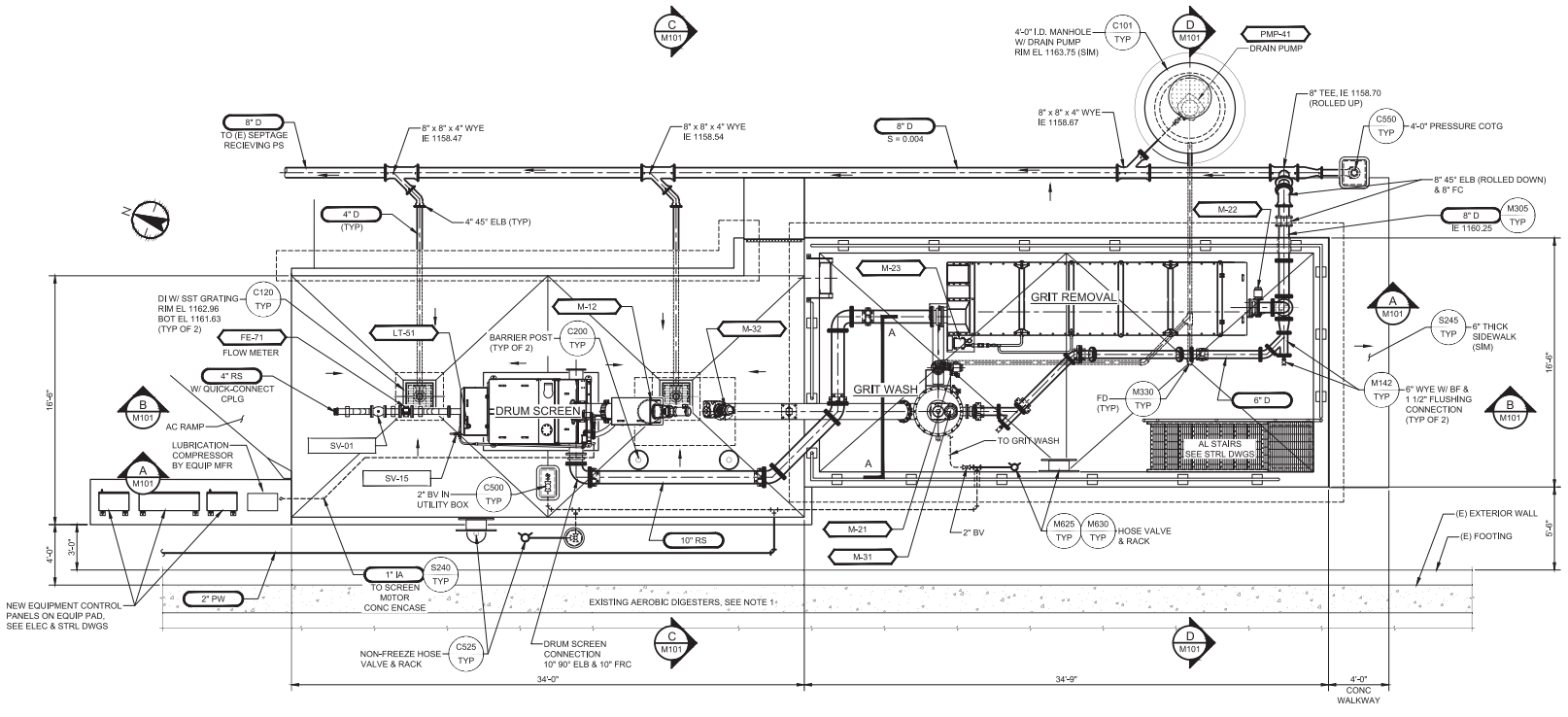

PLAN
SCALE: 1/4"=1'-0"

Revision	By	Appd.	YY.MM.DD
Issued			
ISSUED FOR BID	BPC	SLB	24.03.15
	By	Appd	YY.MM.DD

Permit/Seal
REGISTERED PROFESSIONAL ENGINEER — BETH P. COHEN — No. C70184 — Exp.9/30/2024 — CIVIL — STATE OF CALIFORNIA
2024.03.15

Consultant

Stantec
Stantec Consulting Services Inc.
2250 Douglas Blvd., Suite 260
Roseville CA 95661
Tel:(916) 773-8100
www.stantec.com

Copyright Reserved
The Contractor shall verify and be responsible for all dimensions. DO NOT scale the drawing - any errors or omissions shall be reported to Stantec without delay. The Copyrights to all designs and drawings are the property of Stantec. Reproduction or use for any purpose other than that authorized by Stantec is forbidden.

Client/Project Logo
EL DORADO COUNTY CALIFORNIA

COUNTY OF EL DORADO
COMMUNITY DEVELOPMENT SERVICES
ENVIRONMENTAL
MANAGEMENT DEPARTMENT
2850 FAIRLANE COURT
PLACERVILLE, CALIFORNIA 95667

Client/Project
County of El Dorado
UNION MINE
WASTEWATER TREATMENT PLANT
HEADWORKS
County of El Dorado, California

File Name: 032224-M100 | ASB Dwn. | BPC Dsgn. | SLB Chkd. | 24.03.15 YY.MM.DD

Title
NEW HEADWORKS PLAN

Project No. 184032224
Scale AS SHOWN
Revision 0
Sheet 27 of 35
Drawing No. M100

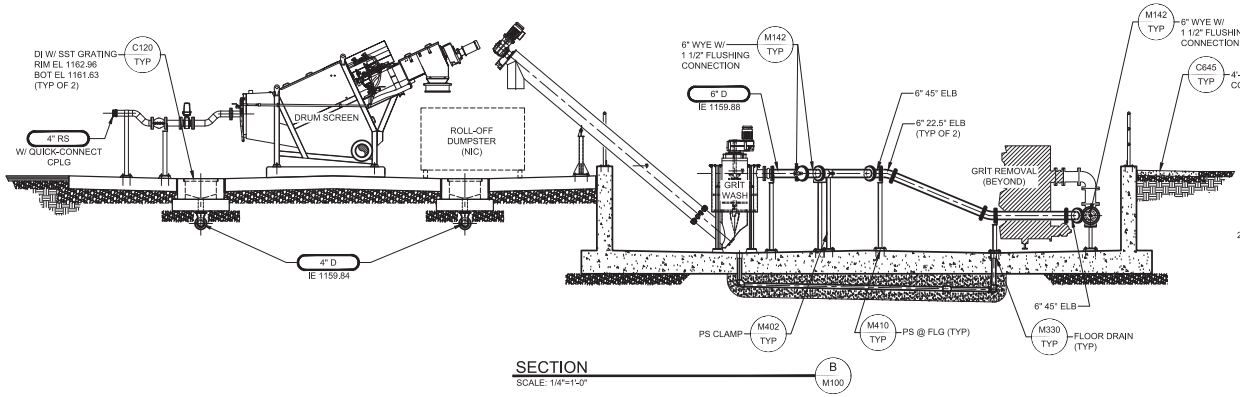

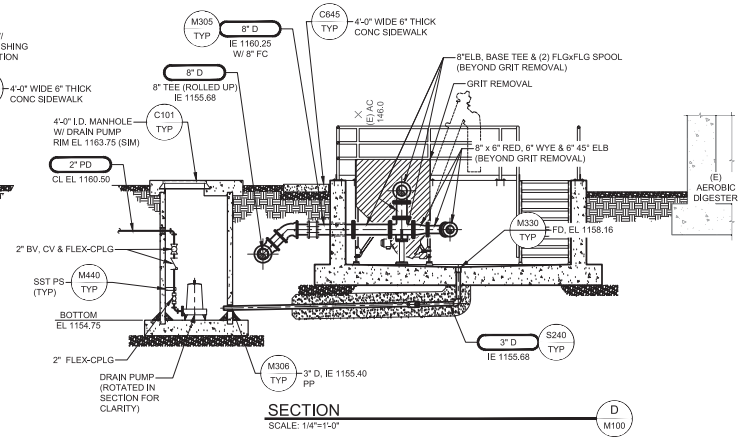

SHEET NOTES:

1. DURING EXCAVATION, CONTRACTOR SHALL INSTALL SHORING TO PROTECT THE EXISTING AEROBIC DIGESTER. IN ACCORDANCE WITH SPECIFICATIONS, SUBMIT SHORING DESIGN TO OWNER FOR APPROVAL; SHORING SHALL BE DESIGNED BY CALIFORNIA REGISTERED PROFESSIONAL ENGINEER (CIVIL OR STRUCTURAL ENGINEER) AND COMPLIANT WITH OSHA REQUIREMENTS.
2. INSULATE PIPES PER SPECIFICATIONS.
3. CONCRETE ENCASE ALL PIPES BELOW SLABS, IN ACCORDANCE WITH TYPICAL STRUCTURAL DETAIL S240/TYP.

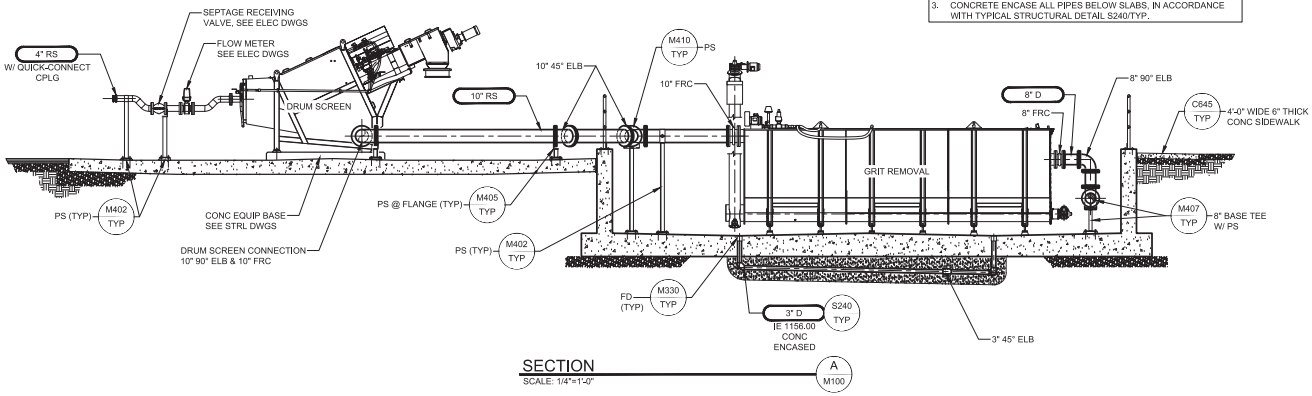

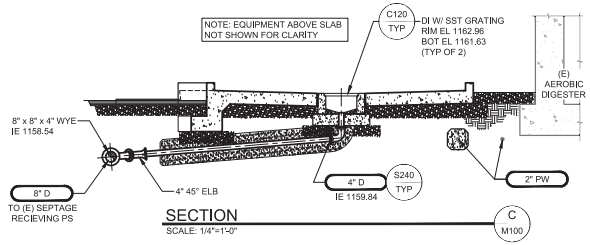

Revision	By	Appd.	YY.MM.DD
ISSUED FOR BID	BPC	SLB	24.03.15
Issued	By	Appd	YY.MM.DD

Permit/Seal

REGISTERED PROFESSIONAL ENGINEER
BETH P. COREN
No. C70184
CIVIL
STATE OF CALIFORNIA
5/30/2024

2024.03.15

Consultant

Stantec

Stantec Consulting Services Inc.
2250 Douglas Blvd., Suite 260
Roseville CA 95661
Tel:(916) 773-8100
www.stantec.com

Copyright Reserved
The Contractor shall verify and be responsible for all dimensions. DO NOT scale the drawing - any errors or omissions shall be reported to Stantec without delay.
The Copyrights to all designs and drawings are the property of Stantec. Reproduction or use for any purpose other than that authorized by Stantec is forbidden.

Client/Project Logo

COUNTY OF EL DORADO
COMMUNITY DEVELOPMENT SERVICES
ENVIRONMENTAL
MANAGEMENT DEPARTMENT
2850 FAIRLANE COURT
PLACERVILLE, CALIFORNIA 95667

Client/Project

County of El Dorado

UNION MINE
WASTEWATER TREATMENT PLANT
HEADWORKS

County of El Dorado, California

File Name: 032224-M100	ASB	BPC	SLB	24.03.15
	Dwn.	Dsgn.	Chkd.	YY.MM.DD

Title

NEW HEADWORKS
SECTIONS

Project No.	Scale
184032224	AS SHOWN
Revision	Sheet
0	28 of 35

Drawing No.

M101

SINGLE LINE DIAGRAM SYMBOLOGY

- MEDIUM VOLTAGE VACUUM DRAWOUT STARTER
- 52 — MEDIUM VOLTAGE DRAWOUT BREAKER
- THERMAL MAGNETIC CIRCUIT BREAKER — LOC: X = LOCATION; 100: FRAME (AMPS); 20: TRIP (AMPS)
- MCP CIRCUIT BREAKER — LOC: X = LOCATION; 7: CONTINUOUS AMPS; MCP: TRIP SETTING BASED ON MOTOR HORSEPOWER
- LOW VOLTAGE DRAWOUT CIRCUIT BREAKER — 800 / 400 (L-S-I-G): L LONG TIME; S SHORT TIME; I INSTANTANEOUS; G GROUND FAULT
- COMBINATION NEMA RATED STARTER WITH MCP DISCONNECT AND CONTROL POWER TRANSFORMER — 40: ROMAN NUMERAL = NEMA SIZE; MCP: X = LOCATION, * = STARTER TYPE: (BLANK) FULL VOLTAGE NON-REVERSING; FVR FULL VOLTAGE REVERSING; 2S2W TWO SPEED TWO WINDING; 2S1W TWO SPEED ONE WINDING
- VFD: X = VARIABLE FREQUENCY DRIVE; X = AMPERE RATING
- RVSS: X = REDUCED VOLTAGE SOLID STATE STARTER; X = AMPERE RATING
- X/Y — PACKAGED EQUIPMENT: X = EQUIPMENT SIZE; Y = TYPE (KW, KVA, OR HP AS INDICATED)
- KEY INTERLOCK
- GENERATOR — RATINGS AS INDICATED
- TRANSFER SWITCH (MANUAL OR AUTOMATIC) — RATINGS AS INDICATED
- AS — AMMETER SWITCH
- VS — VOLTMETER SWITCH

- METERING DEVICE — X = METER TYPE: WH-M WATT HOUR METER; WM WATT METER; AM AMMETER; VM VOLTMETER; PFM POWER FACTOR METER
- 480/120 (+3) — POTENTIAL TRANSFORMER: RATIO AND NUMBER OF PTS AS INDICATED
- 100/5 (3) — CURRENT TRANSFORMER: RATIO AND NUMBER OF CTS AS INDICATED
- GROUND FAULT CURRENT TRANSFORMER — RATIO AS INDICATED
- 5A — FUSE: SIZE AS INDICATED
- X — MOTOR: X = HORSEPOWER, * = FULL LOAD AMPS
- DELTA-WYE TRANSFORMER WITH SECONDARY KVA SIZE AND VOLTAGE RATIO AS INDICATED
- X AMPS, Y SECONDS — 51G — DELTA-WYE TRANSFORMER WITH RESISTANCE GROUNDED SECONDARY AND GROUND FAULT RELAYING: X - GROUNDING RESISTOR AMPS; Y - GROUNDING RESISTOR SECONDS
- FUSED CONTROL POWER TRANSFORMER
- MOV — ELECTRICAL MOTOR OPERATED VALVE, WITH INTEGRAL REVERSING STARTER
- 30A — DISCONNECT SWITCH: SIZE AS INDICATED
- 30A — FUSED DISCONNECT SWITCH: SIZE AS INDICATED
- CAPACITOR
- SPD — SURGE PROTECTIVE DEVICE
- SSN — SOLID STATE METERING DEVICE
- SSMP — SOLID STATE MOTOR PROTECTIVE DEVICE
- LIGHTNING ARRESTOR AND SURGE CAPACITOR
- (#) — ANSI RELAY DEVICE: (#) = QUANTITY, * = ANSI DEVICE:
  - 25 SYNCHRONISM CHECK RELAY
  - 27 UNDERVOLTAGE
  - 27/47 UNDERVOLTAGE, PHASE SEQUENCE, UNBALANCED VOLTAGE
  - 32 DIRECTIONAL POWER RELAY
  - 4* FIELD CONTACTOR
  - 43 SELECTOR SWITCH
  - 49 HIGH OIL TEMPERATURE
  - 50/51 INSTANTANEOUS AND TIME OVERCURRENT
  - 50/51N INSTANTANEOUS AND TIME RESIDUALLY CONNECTED GROUND OVERCURRENT
  - 5*G GROUND FAULT
  - 60 VOLTAGE BALANCE
  - 62 TIME DELAY
  - 63 SUDDEN PRESSURE
  - 67 AC DIRECTIONAL CURRENT RELAY
  - 7*L LOW OIL LEVEL
  - 8* FREQUENCY RELAY
  - 83 CONTROL POWER TRANSFORMER
  - 86 LOCKOUT
  - 87TL TRANSFORMER DIFFERENTIAL
  - 87M MOTOR DIFFERENTIAL
- EPB — ELECTRICAL PULL BOX

PLAN SYMBOLOGY

GROUNDING SYMBOLOGY

- GROUND ROD AND GROUND WELL
- GROUND ROD (3/4" X 10'-0")
- GROUND CONNECTION - BOLTED TYPE
- GROUND CONNECTION - EXOTHERMIC TYPE
- BARE COPPER GROUND TO GROUND WIRE IN SLAB, OR UNDERGROUND GROUND GRID, SIZE AS NOTED
- EARTH GROUNDING

CONDUIT AND RACEWAY SYMBOLOGY

- EXPOSED OR CONCEALED CONDUIT
- CONDUIT RUN (UNDERGROUND OR IN CONCRETE)
- CONDUIT RUN (CHANGE IN ELEVATION)
- CONDUIT TURNING UP
- CONDUIT TURNING DOWN
- CONDUITS GROUPED TOGETHER BUT SHOWN AS A SINGLE LINE FOR CLARITY
- CONDUIT FROM FLOOR ABOVE TO FLOOR BELOW
- CONDUIT CAPPED, OR SEALED
- HOMERUN TO EQUIPMENT INDICATED (3/4 " CONDUIT, 2 #12, 1 #12 GND UNLESS INDICATED OTHERWISE)
- X — RACEWAY BOX: X = BOX TYPE: MH MANHOLE; HH HANDHOLE; PB PULLBOX
- J — JUNCTION BOX OR FITTING

MISCELLANEOUS ELECTRICAL SYMBOLOGY

- POWER PANEL
- DISCONNECT SWITCH
- M — MOTOR
- T — THERMOSTAT
- HORN
- COMBINATION STARTER
- δ_M — MANUAL MOTOR STARTER

ELECTRICAL ABBREVIATIONS

A	AMPERE, AUTOMATIC
AC	ALTERNATING CURRENT
AF	CIRCUIT BREAKER FRAME SIZE
AM	AMMETER
ANN	ANNUNCIATOR
AS	ADJUSTABLE SPEED
AT	AMPERE TRIP
ATS	AUTOMATIC TRANSFER SWITCH
AUTO	AUTOMATIC
AWG	AMERICAN WIRE GAUGE
BATT	BATTERY
BC	BARE COPPER
BKR	BREAKER
C	CONDUIT, CLOSED
CAP	CAPACITOR
CB	CIRCUIT BREAKER
CKT	CIRCUIT
CLF	CURRENT LIMITING FUSE
COM	COMMON
COMM	COMMUNICATIONS
COMP	COMPARTMENT
CP	CONTROL PANEL
CPT	CONTROL POWER TRANSFORMER
CR	CONTROL RELAY, CARD READER
CT	CURRENT TRANSFORMER
DCS	DISTRIBUTED CONTROL SYSTEM
DISC	DISCONNECT
DISTR	DISTRIBUTION
DPDT	DOUBLE POLE DOUBLE THROW
DPST	DOUBLE POLE SINGLE THROW
E	EMERGENCY
EMT	ELECTRICAL METALLIC TUBING
ENCL	ENCLOSURE
ETM	ELAPSED TIME METER
F	FREQUENCY, FUSE, FIXED
FDR	FEEDER
FLA	FULL LOAD AMPS
FLUOR	FLUORESCENT
FM	FREQUENCY METER
FO	FIBER OPTIC
FVR	FULL VOLTAGE REVERSING
FVNR	FULL VOLTAGE NON-REVERSING
GEN	GENERATOR
GFCI	GROUND FAULT CIRCUIT INTERRUPTER
GND	GROUND
H	HAND
HD	HEAT DETECTOR
HH	HAND HOLE
HID	HIGH INTENSITY DISCHARGE
HOA	HAND-OFF-AUTOMATIC
HPS	HIGH PRESSURE SODIUM
HS	HAND SWITCH
HZ	HERTZ
IMC	INTERMEDIATE METALLIC CONDUIT
INCAND	INCANDESCENT
INC	INDICATION
INST	INSTANTANEOUS
I/O	INPUT/OUTPUT
Isc	SHORT CIRCUIT CURRENT, AMPS
ISC	ISOLATION
J, JB	JUNCTION BOX
KA	KILO AMPERES
KAIC	KILO AMP INTERRUPTING CURRENT
KCMIL	KILO CIRCULAR MILS
KVA	KILOVOLT AMPERE
L	LOCAL
LCP	LOCAL CONTROL PANEL
LCS	LOCAL CONTROL STATION
LOC	LOCAL
LOR	LOCAL-OFF-REMOTE
LOS	LOCKOUT STOP PUSHBUTTON
LP	LIGHTING PANEL
LRA	LOCKED ROTOR AMPS
LS	LEVEL SWITCH
LTG	LIGHTING
LTS	LIGHTS
M	MOTOR CONTACTOR COIL
mA	MILLIAMPERE
MCP	MOTOR CIRCUIT PROTECTOR
MLO	MAIN LUGS ONLY
MOV	MOTOR OPERATED VALVE
MS	MANUAL MOTOR STARTER
MTS	MANUAL TRANSFER SWITCH
NEUT	NEUTRAL
NP	NAMEPLATE
O	OPEN, OFF
OL	OVERLOAD
PA	PUBLIC ADDRESS
PB	PUSHBUTTON, PULLBOX
PC	PHOTOCELL
PCM	PROCESS CONTROL MODULE
PF	POWER FACTOR
PFM	POWER FACTOR METER
PH	PHASE
PL	PILOT LIGHT
PNLBD	PANELBOARD
PP	POWER PANELBOARD
POS	POSITION
POT	POTENTIOMETER
PRI	PRIMARY
PT	POTENTIAL TRANSFORMER
PTZ	PAN-TILT-ZOOM
PWR	POWER
R	REMOTE
RECPT	RECEPTACLE
RGS	RIGID GALVANIZED STEEL
RMS	ROOT MEAN SQUARE
RTU	REMOTE TERMINAL UNIT
RVSS	REDUCED VOLTAGE SOLID STATE
SEL SW	SELECTOR SWITCH
SEQ	SEQUENCE
SHLD	SHIELDED
SIG	SIGNAL
SP	SPARE
SP HTR	SPACE HEATER
SPDT	SINGLE POLE DOUBLE THROW
SPST	SINGLE POLE SINGLE THROW
SSM	SOLID STATE METER
SSMP	SOLID STATE MOTOR PROTECTOR
ST, SH	SHUNT TRIP
STR	STARTER
SSTU	SOLID STATE TRIP UNIT
SW	SWITCH
SWBD	SWITCHBOARD
SWGR	SWITCHGEAR
TACH	TACHOMETER
TE	TERMINAL BOX
TERM	TERMINAL
TM	REPEAT CYCLE TIMER
TD	TIME DELAY RELAY
TS	TEMPERATURE SWITCH
UPS	UNINTERRUPTIBLE POWER SUPPLY
V	VOLTAGE, VOLTS
VA	VOLT AMPERE
VAR	VOLT AMPERE REACTIVE
VFD	VARIABLE FREQUENCY DRIVE
VM	VOLTMETER
VP	VAPOR PROOF
W	WATTS, WIRE
WM	WATT METER
WP	WEATHERPROOF
XFMR	TRANSFORMER
XMTR	TRANSMITTER
XP	EXPLOSION PROOF

Revision	By	Appd.	YY.MM.DD
ISSUED FOR BID	BFC	SLB	24.03.15
Issued	Br	Appd	YY.MM.DD

Permit/Seal

REGISTERED PROFESSIONAL ENGINEER — SONG Y. HONG — No. E16474 — Exp.9/30/25 — ELECTRICAL — STATE OF CALIFORNIA

2024.03.15

Consultant

Stantec

Stantec Consulting Services Inc.
2259 Douglas Blvd., Suite 260
Roseville CA 95661
Tel: (916) 773-8100
www.stantec.com

Copyright Reserved
The Contractor shall verify and be responsible for all dimensions. DO NOT scale the drawing - any errors or omissions shall be reported to Stantec without delay. This Copyright, to all designs and drawings are the property of Stantec. Reproduction or use for any purpose other than that authorized by Stantec is forbidden.

Client/Project Logo

COUNTY OF EL DORADO
COMMUNITY DEVELOPMENT SERVICES
ENVIRONMENTAL
MANAGEMENT DEPARTMENT
2850 FAIRLANE COURT
PLACERVILLE, CALIFORNIA 95667

Client/Project

County of El Dorado
UNION MINE
WASTEWATER TREATMENT PLANT
HEADWORKS
County of El Dorado, California

File Name: 032224-S001 | HAM Dwn. | ASB Dsgn. | Chkd. | 24.03.15 YY.MM.DD

Title

ELECTRICAL LEGEND, ABBREVIATIONS AND SYMBOLS

Project No. 184032224 | Scale

Revision | Sheet 29 of 35 | Drawing No. E001

KEYNOTES

1. PROVIDE EATON CATALOG NUMBER P48G11S1524HCUBS64X OR EQUIVALENT AS MINI POWER CENTER.
2. FINAL CIRCUIT BREAKER AND CIRCUIT SIZE SHALL BE PER APPROVED EQUIPMENT SUBMITTAL.

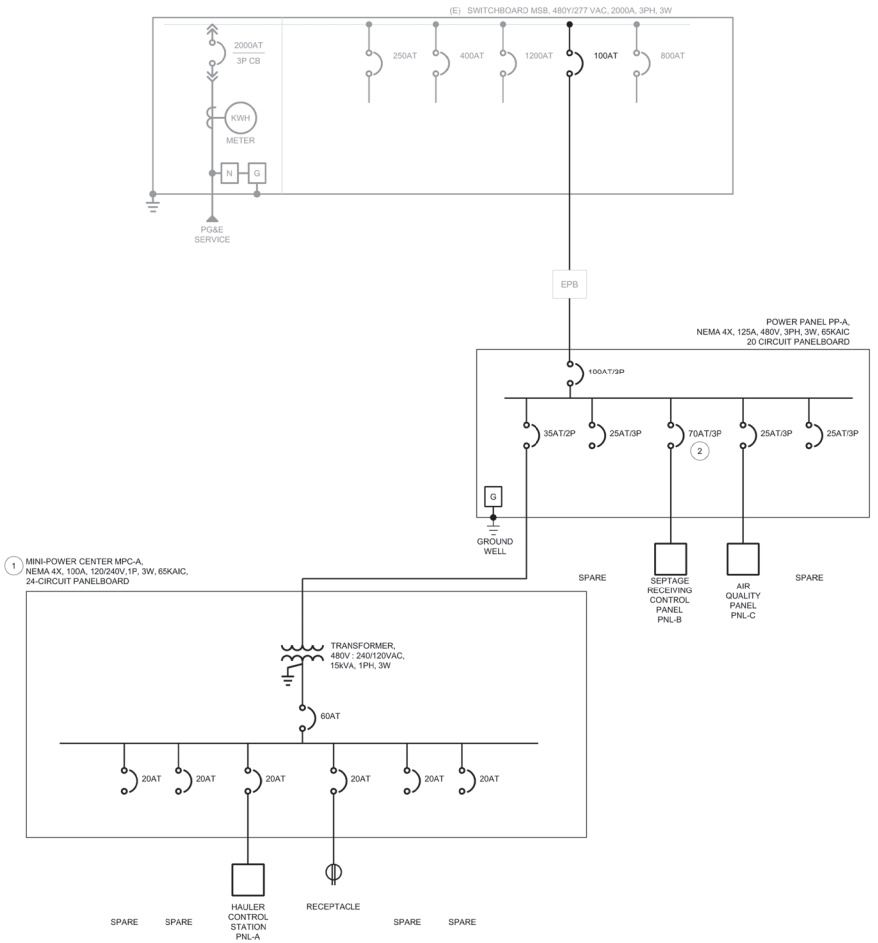

LOAD CALCULATION

NAME	KVA
EXISTING	
HIGHEST PEAK DEMAND IN LAST 12 MONTHS UTILITY BILL AT 0.85PF	328.2
NEW	
SEPTAGE RECEIVING CONTROL PANEL	10.00
MINI POWER CENTER	10.00
AIR QUALITY PANEL	5.00
MISCELLANEOUS LOADS	5.00
25% LARGEST LOAD	2.50
TOTAL KVA	360.7
AMPS AT 480V 3PH= 434A	

CONDUIT SCHEDULE

CONDUIT TAG	CONDUIT SIZE	CABLES	FROM	TO	NOTES
EPB-1	EXISTING 2"C	3#4, 1#6G	MSB	EPB	POWER SOURCE FROM EXISTING SWITCHBOARD
EPB-2	1 1/2"C	3#4, 1#6G	EPB	PP-A	EXTENSION FROM HANDHOLE TO NEW POWER PANEL
PP-1	1"C	2#8, 1#8G	PP-A	MPC-A	POWER CABLES TO MINI POWER CENTER
PP-2	1"C	3#4, 1#8G	HH-1	PNL-B	POWER CABLES TO MASTER CONTROL PANEL
PP-3	1"C	3#10, 1#10G	HH-1	PNL-C	POWER CABLES TO THE AIR QUALITY PANEL
MPC-1	1"C	2#12, 1#12G	HH-1	PNL-A	120V POWER TO HAULER CONTROL STATION
MPC-2	1"C	2#12, 1#12G	HH-1	RECEPTACLE	120V POWER TO RECEPTACLE IN FIELD
C-1	1"C	4#14, 1#14G	PNL-A	CPB-1	CONTROL WIRES FROM HAULER STATION PANEL (TO BE DETERMINED BY VENDOR'S PACKAGED UNIT SCHEMATIC DIAGRAM)
C-2	1"C	30#14, 1#14G	PNL-B	CPB-2	CONTROL WIRES FROM MASTER CONTROL PANEL (TO BE DETERMINED BY VENDOR'S PACKAGED UNIT SCHEMATIC DIAGRAM)
C-3	1"C	30#14, 1#14G	PNL-B	CPB-3	CONTROL WIRES FROM MASTER CONTROL PANEL (TO BE DETERMINED BY VENDOR'S PACKAGED UNIT SCHEMATIC DIAGRAM)
MPC-HH	1"C	4 #12, 1 #12G	MPC-A	HH-1	POWER CABLES FROM PANEL TO HANDHOLE
PP-HH	2"C	3#4, 3#10, 1#8G	PP-A	HH-1	POWER CABLES FROM PANEL TO HANDHOLE
P-1	1"C	14#12, 1#12G	PNL-B	PPB-1	POWER WIRES FROM MASTER CONTROL PANEL (TO BE DETERMINED BY VENDOR'S PACKAGED UNIT SCHEMATIC DIAGRAM)
P-2	1"C	10#12, 1#12G	PNL-B	PPB-2	POWER WIRES FROM MASTER CONTROL PANEL (TO BE DETERMINED BY VENDOR'S PACKAGED UNIT SCHEMATIC DIAGRAM)
P-3	1"C	14#12, 1#12G	PNL-B	PPB-3	POWER WIRES FROM MASTER CONTROL PANEL (TO BE DETERMINED BY VENDOR'S PACKAGED UNIT SCHEMATIC DIAGRAM)
P-4	1"C	2#12, 1#12G	PNL-B	MOTOR COMPRESSOR	POWER WIRES FROM MASTER CONTROL PANEL (TO BE DETERMINED BY VENDOR'S PACKAGED UNIT SCHEMATIC DIAGRAM)
S-1	1"C	4#14, 1#14G	PNL-A	SPB-1	CONTROL WIRES FROM HAULER STATION PANEL (TO BE DETERMINED BY VENDOR'S PACKAGED UNIT SCHEMATIC DIAGRAM)
S-2	3/4"C	2/C #16(SH)	PNL-B	LT-51	TWISTED SHIELDED PAIRS CABLE FROM MASTER CONTROL PANEL (TO BE DETERMINED BY VENDOR'S PACKAGED UNIT SCHEMATIC DIAGRAM)
P-AB1	1"C	4#14, 1#14G	PNL-A	PNL-B	CONTROL WIRES BETWEEN PANEL A AND B (TO BE DETERMINED BY VENDOR'S PACKAGED UNIT SCHEMATIC DIAGRAM)
P-AB2	1"C	(2) 2/C #16(SH)	PNL-A	PNL-B	TWISTED SHIELDED PAIRS CABLES BETWEEN PANEL A AND B (TO BE DETERMINED BY VENDOR'S PACKAGED UNIT SCHEMATIC DIAGRAM)

Revision	By	Appd.	YY.MM.DD

Issued	By	Appd	YY.MM.DD
ISSUED FOR BID	BPC	SLB	24.03.15

Permit/Seal

REGISTERED PROFESSIONAL ENGINEER — LOIS V. HOWE — No. E16474 Exp.9/30/25 — ELECTRICAL — STATE OF CALIFORNIA

2024.03.15

Consultant

Stantec

Stantec Consulting Services Inc.
2250 Douglas Blvd., Suite 260
Roseville CA 95661
Tel:(916) 773-8100
www.stantec.com

Copyright Reserved
The Contractor shall verify and be responsible for all dimensions. DO NOT scale the drawing - any errors or omissions shall be reported to Stantec without delay. The Copyrights to all designs and drawings are the property of Stantec. Reproduction or use for any purpose other than that authorized by Stantec is forbidden.

Client/Project Logo

COUNTY OF EL DORADO
COMMUNITY DEVELOPMENT SERVICES
ENVIRONMENTAL
MANAGEMENT DEPARTMENT
2850 FAIRLANE COURT
PLACERVILLE, CALIFORNIA 95667

Client/Project

County of El Dorado
UNION MINE
WASTEWATER TREATMENT PLANT
HEADWORKS
County of El Dorado, California

File Name: 032224-E002	JH Dwn.	LH Dsgn.	Chkd.	24.03.15 YY.MM.DD

Title

SINGLE LINE
DIAGRAM - ELECTRICAL

Project No. 184032224
Scale

Revision
Sheet 30 of 35
Drawing No. E002

GENERAL SHEET NOTES

1. CLASS 1, DIVISION 2 HAZARDOUS ZONE EXTENDS 18-INCHES ABOVE GRADE AND 10-FEET HORIZONTALLY FROM AEROBIC DIGESTER. CLASS 1, DIVISION 2 HAZARDOUS ZONE EXTENT EXTENDS WITHIN A 10-FOOT ENVELOPE AROUND HEADWORKS EQUIPMENT (SCREEN, GRIT TANK AND CLASSIFIER). CLASS 1, DIVISION 2 HAZARDOUS ZONE EXTENT EXTENDS WITHIN 3-FEET OF BIOFILTER ODOR CONTROL PROCESSES. NEMA 4X ELSEWHERE WITHIN PROJECT LOCATION.
2. PROVIDE HAZARDOUS LOCATION SEALING FITTINGS ON ALL CONDUITS WITHIN CLASSIFIED LCCATION.
3. SEE SHEET E004 FOR DETAILED PLAN OF THE PROCESS AREA.
4. CONTRACTOR TO FIELD VERIFY EXISTING PIPE OR DUCTBANK ALONG THE TRENCH ROUTE PRIOR TO TRENCHING WORK, NOTIFY ENGINEER OF ANY CONFLICT.

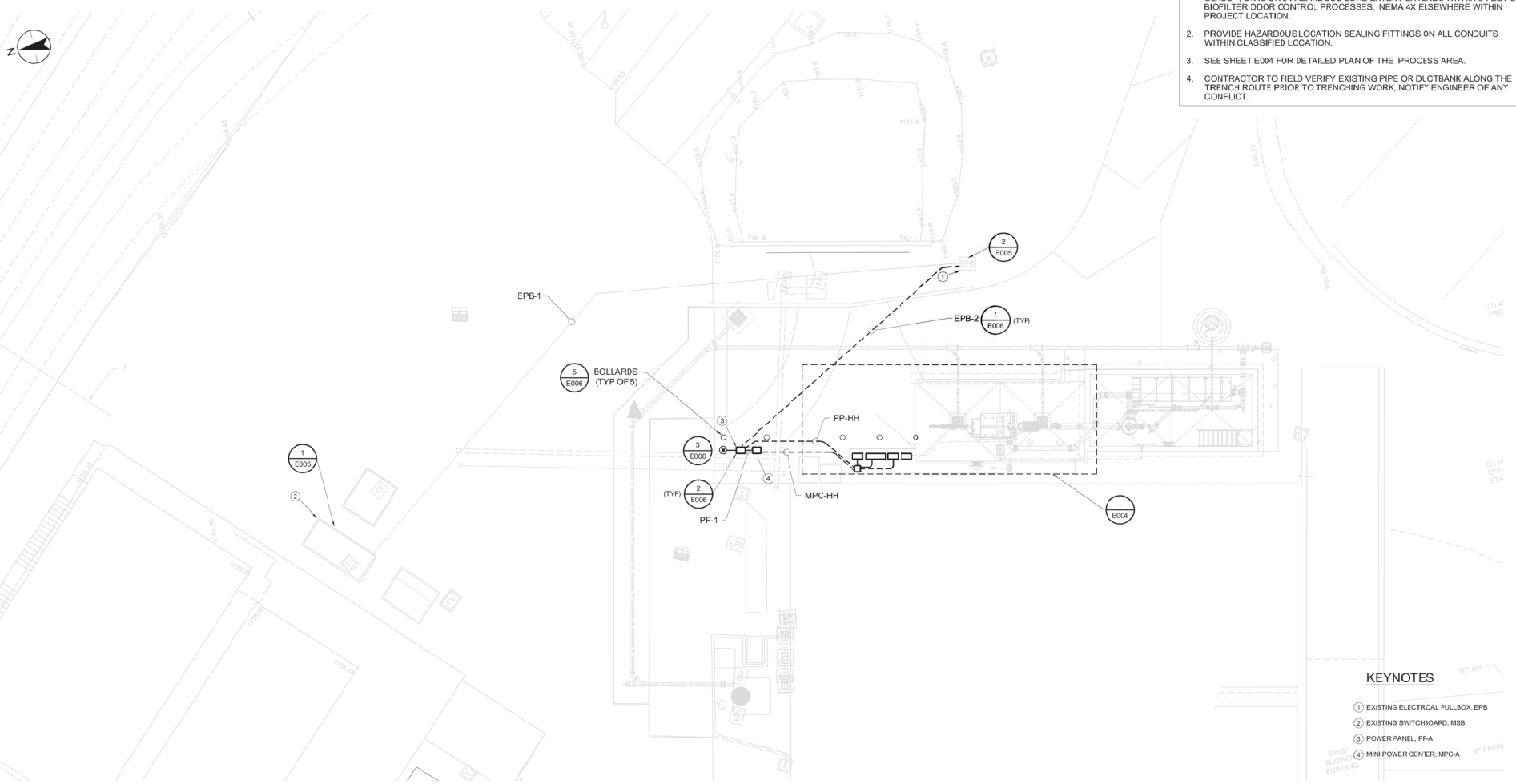

Revision	By	Appd.	YY.MM.DD
ISSUED FOR BID	BPC	SLB	24.0315
Issued	by	Appd	YY.MM.DD

Permit/Seal

REGISTERED PROFESSIONAL ENGINEER — LOK V. YOUNG — No. E16474 — Exp 9/30/25 — ELECTRICAL — STATE OF CALIFORNIA

2024.03.15

Consultant

Stantec

Stantec Consulting Services Inc.
2250 Douglas Blvd., Suite 260
Roseville CA 95661
Tel: (916) 773-8100
www.stantec.com

Copyright Reserved
The Contractor shall verify and be responsible for all dimensions. DO NOT scale the drawing - any errors or omissions shall be reported to Stantec without delay. The Copyrights to all designs and drawings are the property of Stantec. Reproduction or use for any purpose other than that authorized by Stantec is forbidden.

Client/Project Logo

COUNTY OF EL DORADO
COMMUNITY DEVELOPMENT SERVICES
ENVIRONMENTAL
MANAGEMENT DEPARTMENT
2850 FAIRLANE COURT
PLACERVILLE, CALIFORNIA 95667

Client/Project

County of El Dorado
UNION MINE
WASTEWATER TREATMENT PLANT
HEADWORKS
County of El Dorado, California

File Name: 032224-E003	JH	LH		24.03.15
	Dwn.	Dsgn.	Chkd.	YY.MM.DD

Title

NEW HEADWORKS
SITE PLAN - ELECTRICAL
SHEET 1 OF 2

Project No.	Scale
184032224	1" = 10'
Revision Sheet	Drawing No.
31 of 35	E003

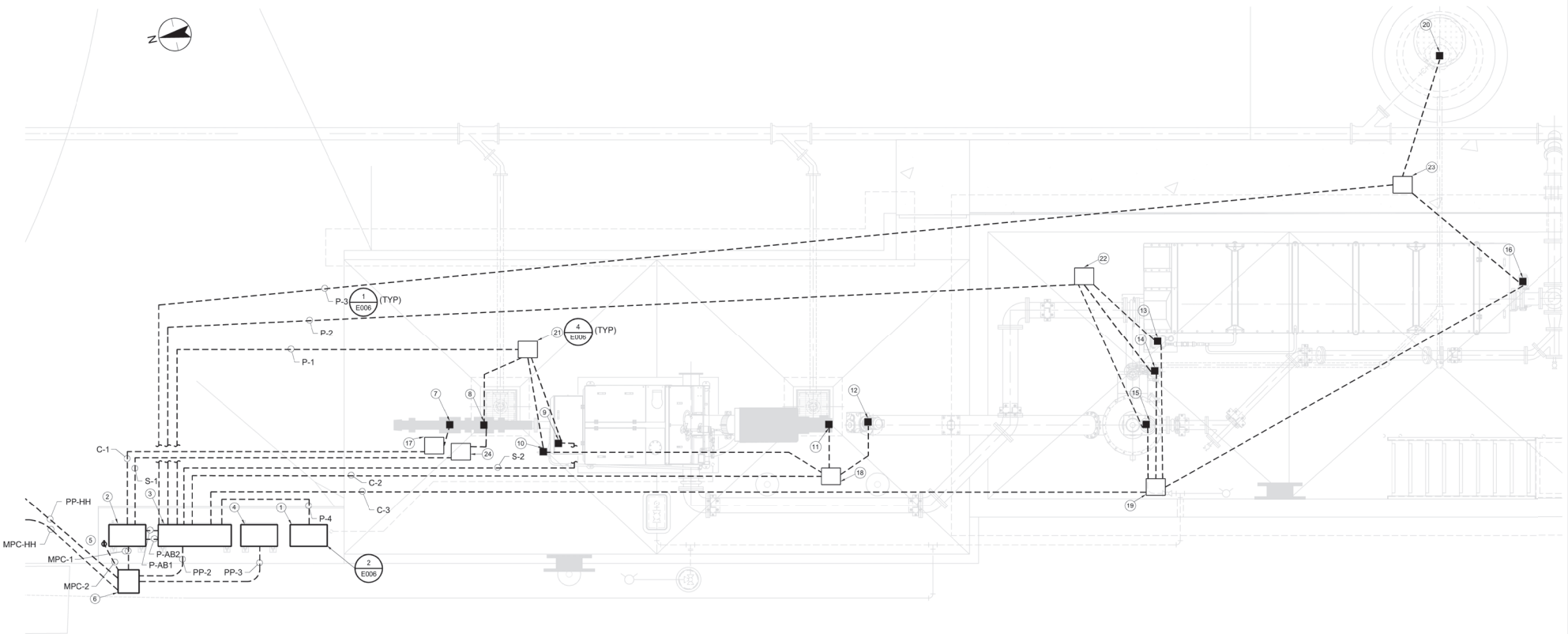

GENERAL SHEET NOTES

1. CLASS 1, DIVISION 2 HAZARDOUS ZONE EXTENDS 18-INCHES ABOVE GRADE AND 10-FEET HORIZONTALLY FROM AEROBIC DIGESTER. CLASS 1, DIVISION 2 HAZARDOUS ZONE EXTENT EXTENDS WITHIN A 10-FOOT ENVELOPE AROUND HEADWORKS EQUIPMENT (SCREEN, GRIT TANK AND CLASSIFIER). CLASS 1, DIVISION 2 HAZARDOUS ZONE EXTENT EXTENDS WITHIN 3-FEET OF BIOFILTER ODOR CONTROL PROCESSES. NEMA 4X ELSEWHERE WITHIN PROJECT LOCATION.
2. PROVIDE HAZARDOUS LOCATION SEALING FITTINGS ON ALL CONDUITS WITHIN CLASSIFIED LOCATION.
3. PROVIDE ALL PANELS WITHIN ONE LARGE SUNSHADE PER DETAIL 2/E006.
4. CONDUIT LAYOUT IS BASED ON PRELIMINARY MANUFACTURER'S EQUIPMENT DATA. CONTRACTOR SHALL SUBMIT CONDUIT LAYOUT PLAN PER APPROVED EQUIPMENT SUBMITTAL FOR REVIEW AND APPROVAL PRIOR TO INSTALLATION.

KEYNOTES

1. MOTOR COMPRESSOR
2. MASTER CONTROL PANEL, PNL-A
3. GRIT WASHER CONTROL PANEL, PNL-B
4. AIR QUALITY PANEL, PNL-C
5. 120V RECEPTACLE, GFCI, WP, +24"AFG
6. HANDHOLE, HH-1
7. FLOW METER, FIT-71
8. SEPTAGE RECEIVING VALVE, SV-01
9. LEVEL TRANSMITTER, LT-51
10. SOLENOID VALVE, SV-15
11. SCREEN DRIVE MOTOR, M-12
12. GRIT WASHER AUGER DRIVE MOTOR, M-32
13. GRIT BLOWER MOTOR, M-23
14. HORIZONTAL GRIT AUGER DRIVE MOTOR, M-21
15. GRIT WASHER DRIVE MOTOR, M-31
16. INCLINE GRIT AUGER DRIVE MOTOR, M-22
17. CONTROL PULL BOX, CPB-1, 17"X30"X18"D
18. CONTROL PULL BOX, CPB-2, 17"X30"X18"D
19. CONTROL PULL BOX, CPB-3, 17"X30"X18"D
20. SUMP PUMP, LSLL-41
21. POWER PULL BOX, PPB-1, 17"X30"X18"D
22. POWER PULL BOX, PPB-2, 17"X30"X18"D
23. POWER PULL BOX, PPB-3, 17"X30"X18"D
24. CONTROL PULL BOX, SPB-1, 17"X30"X18"D

Revision	By	Appd.	YY.MM.DD
ISSUED FOR BID	BPC	SLB	24.03.15
Issued	By	Appd	YY.MM.DD

Permit/Seal

REGISTERED PROFESSIONAL ENGINEER — LONG V. HOANG — No. E16474 — Exp.9/30/25 — ELECTRICAL — STATE OF CALIFORNIA

2024.03.15

Consultant

Stantec

Stantec Consulting Services Inc.
2250 Douglas Blvd., Suite 260
Roseville CA 95661
Tel:(916) 773-8100
www.stantec.com

Copyright Reserved
The Contractor shall verify and be responsible for all dimensions. DO NOT scale the drawing - any errors or omissions shall be reported to Stantec without delay. The Copyrights to all designs and drawings are the property of Stantec. Reproduction or use for any purpose other than that authorized by Stantec is forbidden.

Client/Project Logo

COUNTY OF EL DORADO
COMMUNITY DEVELOPMENT SERVICES
ENVIRONMENTAL
MANAGEMENT DEPARTMENT
2850 FAIRLANE COURT
PLACERVILLE, CALIFORNIA 95667

Client/Project

County of El Dorado
UNION MINE
WASTEWATER TREATMENT PLANT
HEADWORKS
County of El Dorado, California

File Name: 032224-E004 | HAM Dwn. | ASB Dsgn. | Chkd. | 24.03.15 YY.MM.DD

Title

NEW HEADWORKS
SITE PLAN- ELECTRICAL
SHEET 2 OF 2

Project No. 184032224 | Scale 3/8" = 1'-0"

Revision | Sheet 32 of 35 | Drawing No. E004



NOTE:

1. USE EXISTING CONDUIT TO CONNECT THE NEW 100A CIRCUIT BREAKER TO THE SEPTIC SYSTEM THROUGH EXISTING PULL BOX EPB.

EXISTING SWITCHBOARD - MSB

SCALE: NONE

1 E005





CONDUIT ROUTING FROM MSB TO PULLBOX EPB

SCALE: NONE

2 E005

KEYNOTES

1. IF SPARE CONDUIT IS NO LONGER AVAILABLE. CONTRACTOR MAY USE THE DECOMMISSIONED MICRO TURBINE SYSTEM'S CONDUIT IN THE SAME TRENCH, COORDINATE WITH PLANT MANAGER PRIOR TO REMOVING AND WASTING OF EXISTING CONDUCTORS AND INSTALLATION OF NEW CONDUCTORS.

Revision	By	Appd.	YY.MM.DD
ISSUED FOR BID	BPC	SLB	24.03.15
Issued	By	Appd	YY.MM.DD

Permit/Seal

REGISTERED PROFESSIONAL ENGINEER LONG T. HONG No. E16474 Exp. 9/30/25 ELECTRICAL STATE OF CALIFORNIA

2024.03.15

Consultant

Stantec

Stantec Consulting Services Inc.
2250 Douglas Blvd., Suite 260
Roseville CA 95661
Tel:(916) 773-8100
www.stantec.com

Copyright Reserved
The Contractor shall verify and be responsible for all dimensions. DO NOT scale the drawing - any errors or omissions shall be reported to Stantec without delay. The Copyrights to all designs and drawings are the property of Stantec. Reproduction or use for any purpose other than that authorized by Stantec is forbidden.

Client/Project Logo

COUNTY OF EL DORADO
COMMUNITY DEVELOPMENT SERVICES
ENVIRONMENTAL
MANAGEMENT DEPARTMENT
2850 FAIRLANE COURT
PLACERVILLE, CALIFORNIA 95667

Client/Project

County of El Dorado
UNION MINE
WASTEWATER TREATMENT PLANT
HEADWORKS
County of El Dorado, California

File Name: 032224-S005 | Dwn. JH | Dsgn. LH | Chkd. | 24.03.15 YY.MM.DD

Title

ELECTRICAL DETAILS 1

Project No. 184032224
Scale NONE
Revision
Sheet 33 of 35
Drawing No. E005

County of El Dorado

BID #24-0056
Attachment B

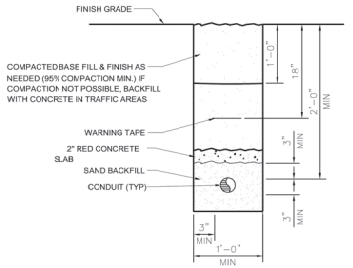

TRENCH DETAIL
SCALE: NONE
1 E006

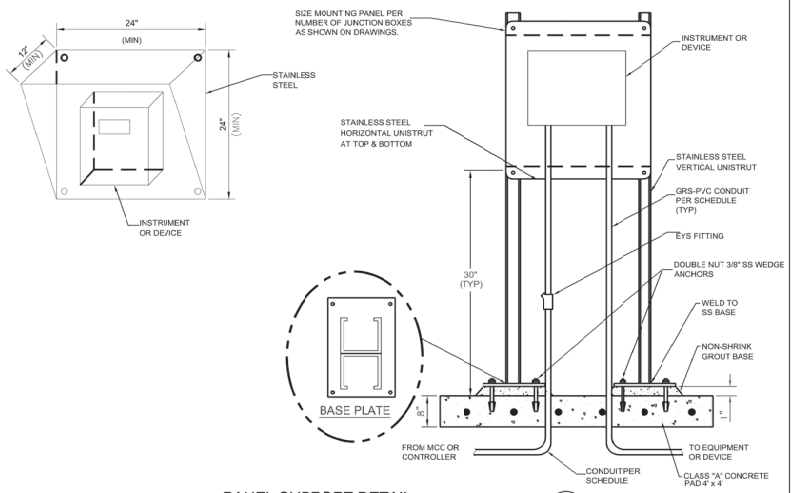

PANEL SUPPORT DETAIL
SCALE: NONE
2 E006

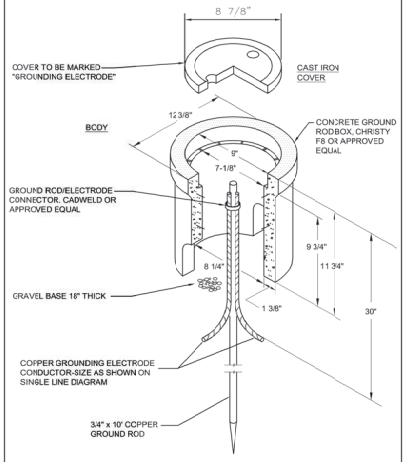

CONCRETE GROUND ROD BOX
SCALE: NONE
3 E006

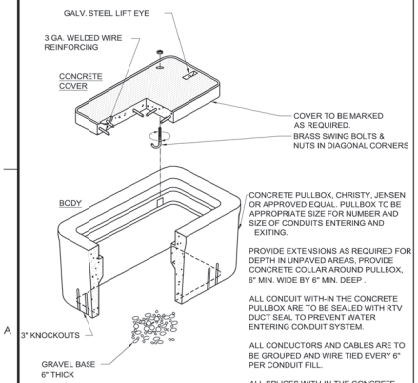

TRENCH DETAIL
SCALE: NONE
4 E006

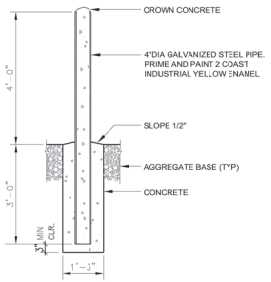

PERMANENT BOLLARD DETAIL
SCALE: NONE
5 E006

Revision	By	Appd.	YY.MM.DD

Issued			
ISSUED FOR BID	BPC	SLB	24.0315
	by	Appd	YY.MM.DD

Permit/Seal

REGISTERED PROFESSIONAL ENGINEER LOIS V. YOUNG No. E16474 Exp 9/30/25 ELECTRICAL STATE OF CALIFORNIA

2024.03.15

Consultant

Stantec

Stantec Consulting Services Inc.
2250 Douglas Blvd., Suite 260
Roseville CA 95661
Tel: (916) 773-8100
www.stantec.com

Copyright Reserved
The Contractor shall verify and be responsible for all dimensions. DO NOT scale the drawing - any errors or omissions shall be reported to Stantec without delay. The Copyrights to all designs and drawings are the property of Stantec. Reproduction or use for any purpose other than that authorized by Stantec is forbidden.

Client/Project Logo

COUNTY OF EL DORADO
COMMUNITY DEVELOPMENT SERVICES
ENVIRONMENTAL
MANAGEMENT DEPARTMENT
2850 FAIRLANE COURT
PLACERVILLE, CALIFORNIA 95667

Client/Project

County of El Dorado
UNION MINE
WASTEWATER TREATMENT PLANT
HEADWORKS
County of El Dorado, California

File Name: 032224-E006	JH	LH		24.03.15
	Dwn.	Dsgn.	Chkd.	YY.MM.DD

Title
ELECTRICAL DETAILS 2

Project No.	Scale
184032224	NONE
Revision Sheet	Drawing No.
34 of 35	E006

NOTES:

1. ALL CONTROL PANELS ARE PROVIDED BY THE MANUFACTURER ALONG WITH THE SEPTAGE RECEIVING STATION AS A PACKAGE INCLUDING REQUIRED CABLES. REFER TO SPECIFICATION SECTION " 11330 SEPTAGE RECEIVING STATION" FOR MORE INFORMATION.

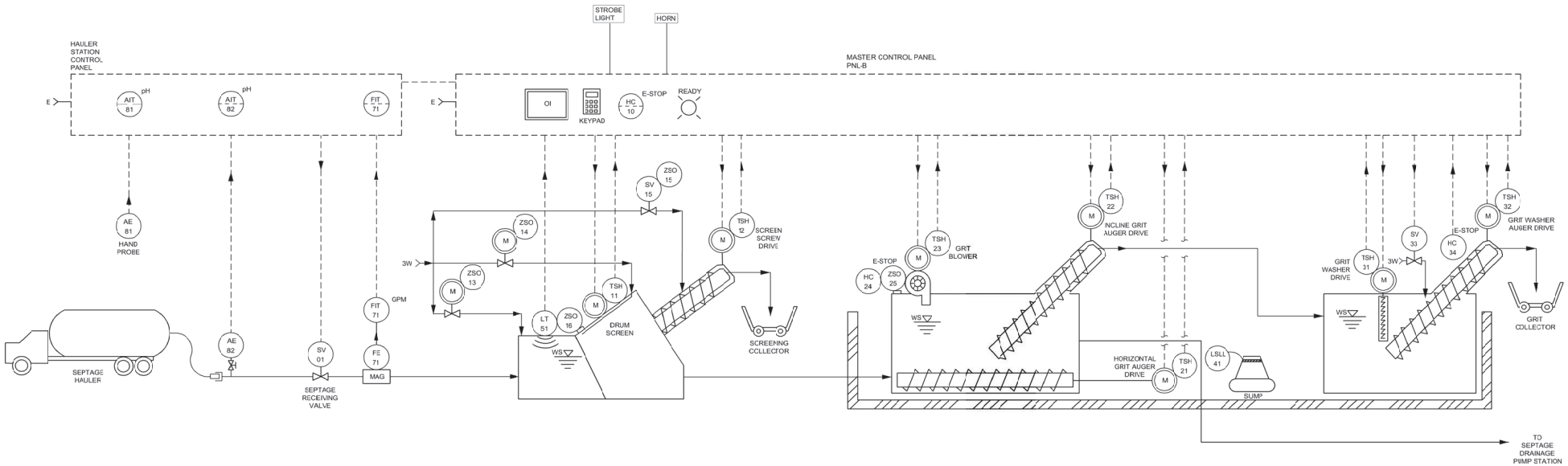

Revsion	By	Appd.	YY.MM.DD
ISSUED FOR BID	BPC	SLB	24.03.15
Issued	By	Appd	YY.MM.DD

Permit/Seal

REGISTERED PROFESSIONAL ENGINEER LOG T. HOANG No. E16474 Exp.9/30/25 ELECTRICAL STATE OF CALIFORNIA

2024.03.15

Consultant

Stantec

Stantec Consulting Services Inc.
2250 Douglas Blvd., Suite 260
Roseville CA 95661
Tel:(916) 773-8100
www.stantec.com

Copyright Reserved
The Contractor shall verify and is responsible for all dimensions. DO NOT scale the drawing - any errors or omissions shall be reported to Stantec without delay. The Copyrights to all designs and drawings are the property of Stantec. Reproduction or use for any purpose other than that authorized by Stantec is forbidden.

Client/Project Logo

COUNTY OF EL DORADO
COMMUNITY DEVELOPMENT SERVICES
ENVIRONMENTAL
MANAGEMENT DEPARTMENT
2850 FAIRLANE COURT
PLACERVLLE, CALIFORNIA 95667

Client/Project

County of El Dorado
UNION MINE
WASTEWATER TREATMENT PLANT
HEADWORKS
County of El Dorado, California

File Name: 032224-001 | Dwn. ABS | Dsgn. | Chkd. | 24.03.15 YY.MM.DD

Title

SEPTAGE RECEIVING STATION P&ID

Project No. 184032224
Scale
Revision
Sheet 35 of 35
Drawing No. I001

County of El Dorado

BID #24-0056
Attachment B