FINDINGS and CONDITIONS of APPROVAL

S02-25R/UbiquiTel PCS

Zoning Administrator hearing of July 16, 2003

1. The Special Use Permit authorizes the addition of three new antennas on the existing monopole, and the installation of three electrical cabinets.	The site was built to plan
2. All site improvements shall conform to the submitted site plans, dated June 6, 2003, attached on Exhibit D	The site was built to plan.
3. The aeronautical study conducted for the project revealed that the structure does exceed obstruction standards, but would not be a hazard to air navigation provided the following condition(s), if any, is (are) met: As a condition to this determination, the structure should be marked and/or lighted in accordance with FAA Advisory Circular 70/7460-1 70/7460-1, Obstruction Marking and Lighting, a mec - dual system -Chapters 4,8 (M-Dual), &12. It is required that the FAA Form 7460-2, Notice of Actual Construction or Alteration, be completed and returned to the Western Pacific Regional Office any time the project is abandoned or: • At least 10 days prior to start of construction • Within 5 days after the construction reaches its greatest height (7460-2, Part II). As a result of this structure being critical to flight safety, it is required that the FAA be kept appraised as to the status of the project. Failure to respond to periodic FAA inquiries could invalidate the FAA's Determination of No Hazard to Air Navigation.	This was a construction condition and would have been met at the time of construction.
4. All obsolete or unused communication facilities shall be removed within six (6) months after the use of that facility has ceased, or the facility has been abandoned. The applicant shall notify the Planning Department at the time of abandonment, and all disturbance related to the communication facility shall be restored to pre-project condition.	The facility is still in use

5. All improvements associated with the communication facility, including equipment shelters, towers, antenna, fencing, and landscaping shall be properly maintained at all times. Colors of towers and other improvements shall be maintained to ensure the appearance remains consistent with approved conditions relating to color. Fencing surrounding the equipment shelter/electrical cabinets shall be of solid wood fencing, and consist of natural wood color, dark brown, dark green, or black in color. If other types of fencing are used, the fencing shall be utilized to screen the equipment shelter/electrical cabinets from public view, and shall consist of dark brown, dark green, or black in color. Prior to issuance of a building permit, the plot plan and elevation plan for the building permit shall delineate a perimeter solid wood fence surrounding the equipment shelter/electrical cabinets, and shall be of sufficient height to adequately screen the equipment shelter/electrical cabinets from public view.	The paint on the tower remains in good condition. The wood fencing around the tower is a natural wood color.
6. The applicant shall assume full responsibility for resolving television reception interference caused by the operation of this facility. The applicant shall take corrective action within 30 days of the receipt of the written complaint.	No complaints for interference have been received
7. All underground utilities shall be located before any construction begins.	This was a construction condition and would have been met at the time
8. Due to the ever-changing technology of wireless communication systems, Special Use Permit 02-25 shall be reviewed by the Planning Commission every five years. At each five-year review, the permit holder shall provide the Planning Commission with a status report on the then current use of the subject site and related equipment. The Planning Commission shall review the status report and, based on an assessment of the information provided, current wireless communication technology, and possible local or cumulative impacts, determine whether to: 1) Modify the conditions of approval in order to reduce identified adverse impacts; and 2) Initiate proceedings to revoke the Special Use Permit, requiring the facility's removal, if it is no longer an integral part of the wireless communication system. By operation of this condition, it is the intent of the Planning Commission to reserve the right to modify existing or add new conditions, consistent with the language specified above. The failure of the Planning Commission to conduct or complete a five-year review in a timely fashion shall not invalidate the Special Use Permit. The applicant shall pay a fee as determined by the Planning Director to cover the cost of processing a five-year review.	This statement is being submitted as part of the required five-year review.

9. During all grading and construction activities in the project area, an archaeologist or Historian approved by the Planning Director shall be on-call. In the event a heritage resource or other item of historical or archaeological interest is discovered during grading and construction activities, the project proponent shall ensure that all such activities cease within 50 feet of the discovery until the on-call archaeologist can examine the find in place and determine its significance. If the find is determined to be significant and authenticated, the archaeologist shall determine the proper method(s) for handling the resource or item. Grading and construction activities may resume after appropriate measures are taken or the site is determined not to be of significance. The project grading plans shall include this mitigation/condition on the plans. The Planning Department shall review the grading plans prior to issuance of a grading permit.	This was a construction condition and was complied with at the time of construction
10. In the event of the discovery of human remains, all work is to stop and the County coroner shall be immediately notified pursuant to Section 7050.5 of the Health and Safety Code and Section 5097.98 of the Public Resources Code. Ifthe remains are determined to be Native American, the Coroner must contact the Native American Heritage Commission within 24 hours. The treatment and disposition of human remains shall be completed consistent with guidelines of the Native American Heritage Commission. The project grading plans shall include this mitigation/condition on the plans. The Planning Department shall review the grading plans prior to issuance of a grading permit".	This was a construction condition and was complied with.
11. Project facilities shall be subject to a building permit from the El Dorado County	A building permit for the construction of the facility was received and finaled

T··Mobile·

WEST LLC.

1755 CREEKSIDE OAKS DRIVE # 190, SACRAMENTO, CA 95833

SC09453A – SKYLINE DRIVE & HWY 50

1705 SKYLINE WAY
SOUTH LAKE TAHOE, CA 96150
APN: 034–771–01

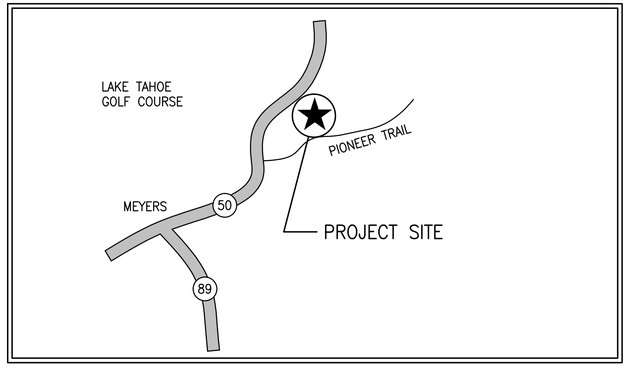

SOUTH LAKE TAHOE, CA

LOCATION PLAN

GENERAL NOTES

1. DRAWINGS ARE NOT TO BE SCALED, WRITTEN DIMENSIONS TAKE PRECEDENCE, AND THIS SET OF PLANS IS INTENDED TO BE USED FOR DIAGRAMMATIC PURPOSES ONLY, UNLESS NOTED OTHERWISE. THE GENERAL CONTRACTOR'S SCOPE OF WORK SHALL INCLUDE FURNISHING ALL MATERIALS, EQUIPMENT, LABOR AND ANYTHING ELSE DEEMED NECESSARY TO COMPLETE INSTALLATIONS AS DESCRIBED HEREIN.

2. PRIOR TO THE SUBMISSION OF BIDS, THE CONTRACTORS INVOLVED SHALL VISIT THE JOB SITE AND FAMILIARIZE THEMSELVES WITH ALL CONDITIONS AFFECTING THE EXISTING PROJECT, WITH THE CONSTRUCTION AND CONTRACT DOCUMENTS, FIELD CONDITIONS AND CONFIRM THAT THE PROJECT MAY BE ACCOMPLISHED AS SHOWN PRIOR TO PROCEEDING WITH CONSTRUCTION. ANY ERRORS, OMISSIONS, OR DISCREPANCIES ARE TO BE BROUGHT TO THE ATTENTION OF THE ARCHITECT/ ENGINEER.

3. THE GENERAL CONTRACTOR SHALL RECEIVE WRITTEN AUTHORIZATION TO PROCEED WITH CONSTRUCTION PRIOR TO STARTING WORK ON ANY ITEM NOT CLEARLY DEFINED BY THE CONSTRUCTION DRAWINGS/CONTRACT DOCUMENTS.

4. THE CONTRACTOR SHALL SUPERVISE AND DIRECT THE PROJECT DESCRIBED HEREIN. THE CONTRACTOR SHALL BE SOLELY RESPONSIBLE FOR ALL CONSTRUCTION MEANS, METHODS, TECHNIQUES, SEQUENCES, AND PROCEDURES AND FOR COORDINATING ALL PORTIONS OF THE WORK UNDER THE CONTRACT.

5. THE CONTRACTOR SHALL INSTALL ALL EQUIPMENT AND MATERIALS ACCORDING TO MANUFACTURER'S/VENDOR'S SPECIFICATIONS UNLESS NOTED OTHERWISE OR WHERE LOCAL CODES OR ORDINANCES TAKE PRECEDENCE.

6. ALL WORK PERFORMED ON PROJECT AND MATERIALS INSTALLED SHALL BE IN STRICT ACCORDANCE WITH ALL APPLICABLE CODES, REGULATIONS, AND ORDINANCES. CONTRACTOR SHALL GIVE ALL NOTICES AND COMPLY WITH ALL LAWS, ORDINANCES, RULES, REGULATIONS, AND LAWFUL ORDERS OF ANY PUBLIC AUTHORITY, MUNICIPAL AND UTILITY COMPANY SPECIFICATIONS, AND LOCAL AND STATE JURISDICTIONAL CODES BEARING ON THE PERFORMANCE OF THE WORK.

7. GENERAL CONTRACTOR SHALL PROVIDE AT THE PROJECT SITE A FULL SET OF CONSTRUCTION DOCUMENTS UPDATED WITH THE LATEST REVISIONS AND ADDENDUMS OR CLARIFICATIONS FOR THE USE BY ALL PERSONNEL INVOLVED WITH THE PROJECT.

8. THE STRUCTURAL COMPONENTS OF THIS PROJECT SITE/FACILITY ARE NOT TO BE ALTERED BY THIS CONSTRUCTION PROJECT UNLESS NOTED OTHERWISE.

9. DETAILS HEREIN ARE INTENDED TO SHOW END RESULT OF DESIGN. MINOR MODIFICATIONS MAY BE REQUIRED TO SUIT JOB CONDITIONS OR SITUATIONS, AND SUCH MODIFICATIONS SHALL BE INCLUDED AS PART OF THE SCOPE OF WORK.

10. SEAL PENETRATIONS THROUGH FIRE–RATED AREAS WITH U.L. LISTED OR FIRE MARSHALL APPROVED MATERIALS IF APPLICABLE TO THIS FACILITY AND OR PROJECT SITE.

11. THE CONTRACTOR SHALL MAKE NECESSARY PROVISIONS TO PROTECT EXISTING IMPROVEMENTS, EASEMENTS, PAVING, CURBING, ETC. DURING CONSTRUCTION. UPON COMPLETION OF WORK, CONTRACTOR SHALL REPAIR ANY DAMAGE THAT MAY HAVE OCCURRED DUE TO THE CONSTRUCTION ON OR ABOUT THE PROPERTY.

12. CONTRACTOR SHALL SEE TO IT THAT GENERAL WORK AREA IS KEPT CLEAN AND HAZARD FREE DURING CONSTRUCTION AND DISPOSE OF ALL DIRT, DEBRIS, RUBBISH AND REMOVE EQUIPMENT NOT SPECIFIED AS REMAINING ON THE PROPERTY. PREMISES SHALL BE LEFT IN CLEAN CONDITION AND FREE FROM PAINT SPOTS, DUST, OR SMUDGES OF ANY NATURE.

13. THE ARCHITECTS/ENGINEERS HAVE MADE EVERY EFFORT TO SET FORTH IN THE CONSTRUCTION AND CONTRACT DOCUMENTS THE COMPLETE SCOPE OF WORK. CONTRACTORS BIDDING THE JOB ARE NEVERTHELESS CAUTIONED THAT MINOR OMISSIONS OR ERRORS IN THE DRAWINGS AND OR SPECIFICATIONS SHALL NOT EXCUSE SAID CONTRACTOR FROM COMPLETING THE PROJECT AND IMPROVEMENTS IN ACCORDANCE WITH THE INTENT OF THESE DOCUMENTS. THE BIDDER SHALL BEAR THE RESPONSIBILITY OF NOTIFYING (IN WRITING) THE ARCHITECT/ENGINEER OF ANY CONFLICTS, ERRORS, OR OMISSIONS PRIOR TO THE SUBMISSION OF CONTRACTOR'S PROPOSAL. IN THE EVENT OF DISCREPENCIES THE CONTRACTOR SHALL PRICE THE MORE COSTLY OR EXTENSIVE WORK, UNLESS DIRECTED OTHERWISE.

Exhibit B

DIRECTIONS

FROM T–MOBILE OFFICE @ 1755 CREEKSIDE OAKS DRIVE, SACRAMENTO, CA 95833:

1. HEAD WEST ON CREEKSIDE OAKS DR TOWARD CAPITAL PARK DR
2. TURN LEFT ONTO CAPITAL PARK DR
3. TURN LEFT ONTO NATOMAS PARK DR
4. TAKE THE 1ST RIGHT ONTO GARDEN HWY
5. SLIGHT RIGHT TO MERGE ONTO I–5 S TOWARD LOS ANGELES
6. TAKE THE EXIT ONTO CA–99 S/I–305 E/I–80BUS E/US–50 E TOWARD FRESNO
7. CONTINUE ONTO US–50 E/EL DORADO FWY/U.S. ROUTE 50 IN CALIFORNIA
8. SLIGHT RIGHT ONTO OLD MEYERS GRADE RD
9. TURN LEFT ONTO S UPPER TRUCKEE RD
10. TURN RIGHT ONTO US–50 E/EL DORADO FWY/LINCOLN HWY/U.S. ROUTE 50 IN CALIFORNIA
CONTINUE TO FOLLOW US–50 E/LINCOLN HWY
11. TURN RIGHT ONTO PIONEER TRAIL
12. TAKE THE 1ST LEFT ONTO SOUTHERN PINES DR
13. TAKE THE 2ND RIGHT ONTO MEADOW VALE DR
14. TAKE THE 1ST RIGHT ONTO CRYSTAL AIR DR
15. TAKE THE 1ST RIGHT ONTO SKYLINE DR
DESTINATION WILL BE ON THE RIGHT

APPROVALS

LEASING: _____ DATE: _____

ZONING: _____ DATE: _____

RF ENGINEER: _____ DATE: _____

CONSTRUCTION: _____ DATE: _____

CONSTRUCTION: _____ DATE: _____

EQUIPMENT ENGINEER: _____ DATE: _____

OWNER: _____ DATE: _____

PROJECT MILESTONES

12/22/2014	90% CONSTRUCTION DOCUMENTS
01/13/2015	100% CONSTRUCTION DOCUMENTS
06/11/2015	100% CONSTRUCTION DOCUMENTS REV1
02/18/2016	100% CONSTRUCTION DOCUMENTS REV2

PROJECT DIRECTORY

LANDLORD:
JAMES A. LEITNER JR. & ML
1705 SKYLINE DR.
TAHOE VISTA, CA 96148

ARCHITECT:
MANUEL S TSIHLAS
MST ARCHITECTS, INC.
1520 RIVER PARK DRIVE
SACRAMENTO, CA 95815
916–567–9630
manuel@mstarchitects.com

OWNER/APPLICANT:
T–MOBILE WEST LLC.
1755 CREEKSIDE OAKS DR. #190
SACRAMENTO, CA 95833

CONSTRUCTION MANAGER:
BUDD WUELFING
T–MOBILE WEST LLC.
1755 CREEKSIDE OAKS DR. #190
SACRAMENTO, CA 95833
530–863–7342

PROJECT SUMMARY

PROPERTY INFORMATION
LATITUDE: N38° 51' 53" NAD 83
LONGITUDE: W120° 00' 10" NAD 83

ASSESSOR'S PARCEL NUMBER: 034–771–01

JURISDICTION: EL DORADO COUNTY

OCCUPANCY: S–2 (UNMANNED TELECOMMUNICATIONS FACILITY) U (TOWER)

TYPE OF CONSTRUCTION: V–B

ZONING: N/A

CODE COMPLIANCE

ALL WORK AND MATERIALS SHALL BE PERFORMED AND INSTALLED IN ACCORDANCE WITH THE CURRENT EDITIONS OF THE FOLLOWING CODES AS ADOPTED BY THE LOCAL GOVERNING AUTHORITIES. NOTHING IN THESE PLANS IS TO BE CONSTRUED TO PERMIT WORK NOT CONFORMING TO THESE CODES:

2013 CALIFORNIA BUILDING STANDARDS CODE, TITLE 24, CALIFORNIA CODE OF REGULATIONS INCLUDING SUPPLEMENTS EFFECTIVE JULY 1, 2015

PART 1	CALIFORNIA BUILDING STANDARDS ADMINISTRATIVE CODE
PART 2	CALIFORNIA BUILDING CODE
PART 2.5	CALIFORNIA RESIDENTIAL BUILDING CODE
PART 3	CALIFORNIA ELECTRICAL CODE
PART 4	CALIFORNIA MECHANICAL CODE
PART 5	CALIFORNIA PLUMBING CODE
PART 6	CALIFORNIA ENERGY CODE
PART 8	CALIFORNIA HISTORICAL BUILDING CODE
PART 9	CALIFORNIA FIRE CODE
PART 10	CALIFORNIA EXISTING BUILDING CODE
PART 11	CALIFORNIA GREEN BUILDING STANDARDS CODE
PART 12	CALIFORNIA REFERENCE STANDARDS CODE

LOCAL COUNTY OR CITY ORDINANCES

ACCESSIBILITY REQUIREMENTS: THIS FACILITY IS UNMANNED AND NOT FOR HUMAN HABITATION. ACCESSIBILITY NOT REQUIRED IN ACCORDANCE WITH THE 2013 CBC 11B–203.5, AND 11B–202.4 EXCEPTION 7.

PROJECT DESCRIPTION

T–MOBILE AND SPRINT TELECOMMUNICATIONS FACILITY, INCLUDING:

* 13'–0"X6'–9" T–MOBILE EQUIPMENT LEASE AREA WITHIN EXISTING GARAGE.
* (3) T–MOBILE PANEL ANTENNAS, (1) PER SECTOR, ON 100'–0" TALL MONOPOLE.
* 165 SQUARE FOOT SPRINT EQUIPMENT LEASE AREA.
* (3) SPRINT PANEL ANTENNAS (1) PER SECTOR, ON 100'–0" MONOPOLE.
* UNDERGROUND POWER & TELCO UTILITIES TO EQUIPMENT AREAS.

INDEX OF DRAWINGS

DRAWINGS:

1.	T1.1	TITLE SHEET, LOCATION PLAN, PROJECT DATA
2.	C1	SERVEY
3.	A1.1	OVERALL SITE PLAN
4.	A1.2	EQUIPMENT LAYOUT PLAN
5.	A1.3	EQUIPMENT LAYOUT PLAN
6.	A1.4	ANTENNA LAYOUT PLAN
7.	A2.1	PROJECT ELEVATIONS
8.	A2.2	PROJECT ELEVATIONS
9.	A3.1	CONSTRUCTION DETAILS
10.	A3.2	CONSTRUCTION DETAILS
11.	S1.1	STRUCTURAL DETAILS
12.	E1.1	ELECTRICAL ONE–LINE DIAGRAM, PANEL SCHEDULE
13.	E1.2	ELECTRICAL ONE–LINE DIAGRAM, PANEL SCHEDULE

DOCUMENTS:

1. TOWER DESIGN CALCULATIONS BY ANDERSON STRUCTURAL GROUP, DATED 06/11/15
2. MONOPOLE MAPPING REPORT BY FDH ENGINEERING INNOVATION, DATED 01/02/12
3. DISPERSIVE WAVE PROPAGATION TESTING AND REBAR INVESTIGATION BY FDH ENGINEERING INNOVATION, DATE 01/23/13
4. GEOTECHNICAL EVALUATION OF SUBSURFACE CONDITIONS BY FDH ENGINEERING INNOVATION, DATED 01/25/13

MST ARCHITECTS
WIRELESS DIVISION
1520 River Park Drive, Sacramento, CA 95815
916-567-9630
www.MSTArchitects.com

THESE DRAWINGS AND SPECIFICATIONS AS INSTRUMENTS OF SERVICE, ARE AND SHALL REMAIN THE PROPERTY OF MANUEL S. TSIHLAS, ARCHITECT, INC. WHETHER THE PROJECT FOR WHICH THEY WERE MADE IS EXECUTED OR NOT. THE REPRODUCTION, PUBLICATION OR USE BY OTHERS IS PROHIBITED WITHOUT THE WRITTEN CONSENT OF THE ARCHITECT. COPYRIGHT, MANUEL S. TSIHLAS, ARCHITECT, INC. ALL RIGHTS RESERVED.

T··Mobile·
WEST LLC.
SC09453A–SKYLINE DR & HWY 50
1705 SKYLINE WAY
SOUTH LAKE TAHOE, CA 96150
SHEET TITLE: TITLE SHEET, LOCATION PLAN, PROJECT DATA

LICENSED ARCHITECT
MANUEL S. TSIHLAS
No. C-28021
Exp. 08-17
STATE OF CALIFORNIA
Not valid unless signed in ink by licensee.

Revisions:
1 --
2 --
3 --
4 --
5 --

File:	214.520 _T11.dwg
Drawn By:	AJR
Checked By:	MST
Scale:	AS NOTED
Date:	01/18/2016

Job No. 214.520

T1.1

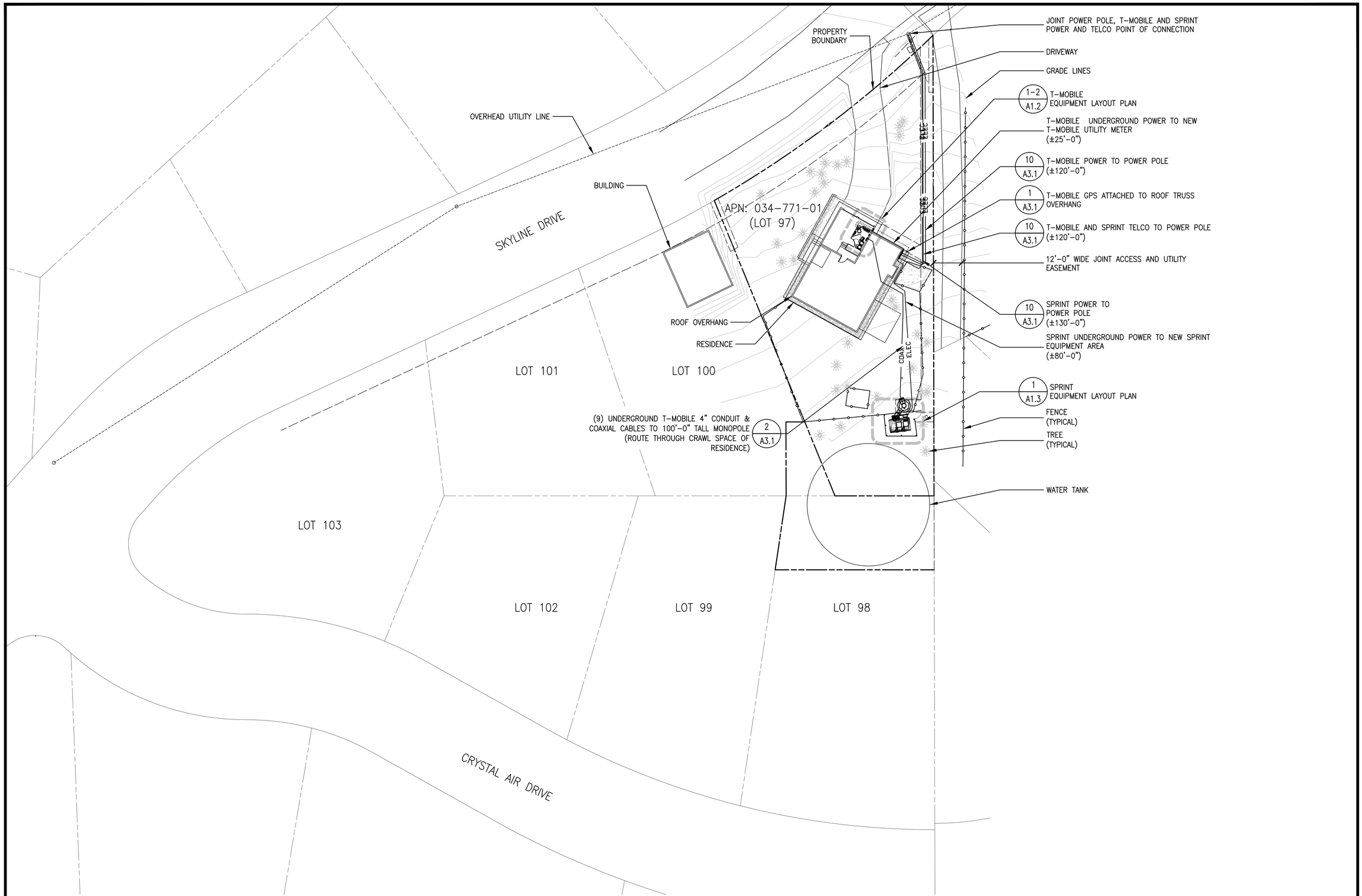

1 A1.1 OVERALL SITE PLAN
SCALE: 1" = 20.0'

MST ARCHITECTS
WIRELESS DIVISION
1520 River Park Drive, Sacramento, CA 95815
916-567-9630
www.MSTArchitects.com

THESE DRAWINGS AND SPECIFICATIONS AS INSTRUMENTS OF SERVICE, ARE AND SHALL REMAIN THE PROPERTY OF MANUEL S. TSIHLAS, ARCHITECT, INC. WHETHER THE PROJECT FOR WHICH THEY WERE MADE IS EXECUTED OR NOT. THE REPRODUCTION, PUBLICATION OR USE BY OTHERS OF ANY PORTION OR ENTIRETY FOR OTHER PROJECTS, EXCEPT FROM WRITTEN CONSENT OF THE ARCHITECT. COPYRIGHT, MANUEL S. TSIHLAS, ARCHITECT, INC. ALL RIGHTS RESERVED.

T-Mobile WESTLLC.
SC09453A-SKYLINE DR & HWY 50
1705 SKYLINE WAY
SOUTH LAKE TAHOE, CA 96150
SHEET TITLE: OVERALL SITE PLAN

LICENSED ARCHITECT
MANUEL S. TSIHLAS
No. C-28021
Exp. 08-17
STATE OF CALIFORNIA
Not valid unless signed in ink by licensee.

Revisions:
--
--
--
--
--

File: 214.520_A11.dwg
Drawn By: AJR
Checked By: MST
Scale: AS NOTED
Date: 01/18/2016

Job No. 214.520

A1.1

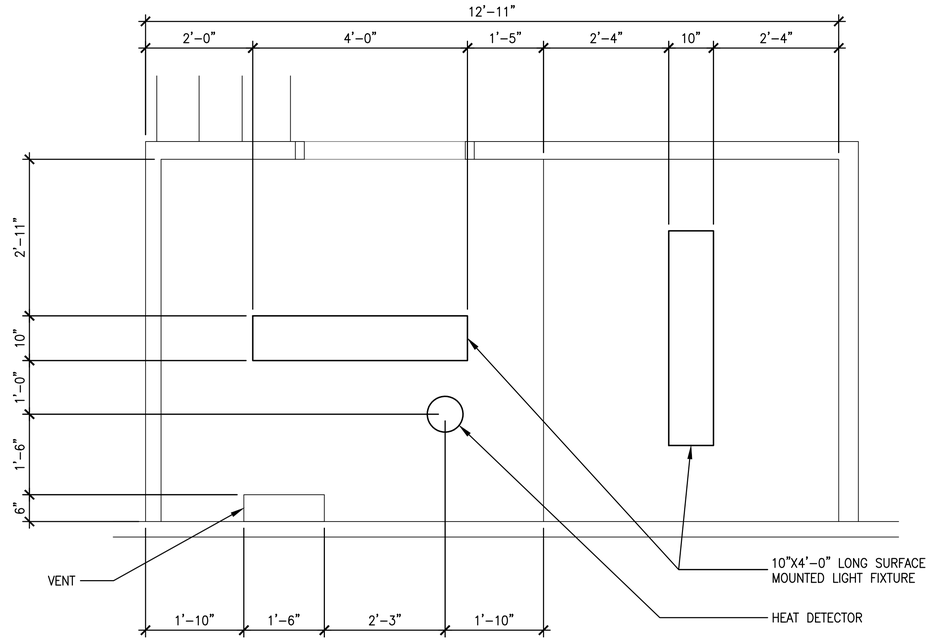

2 A1.2 REFLECTED CEILING PLAN
SCALE: 3/4" = 1'-0"

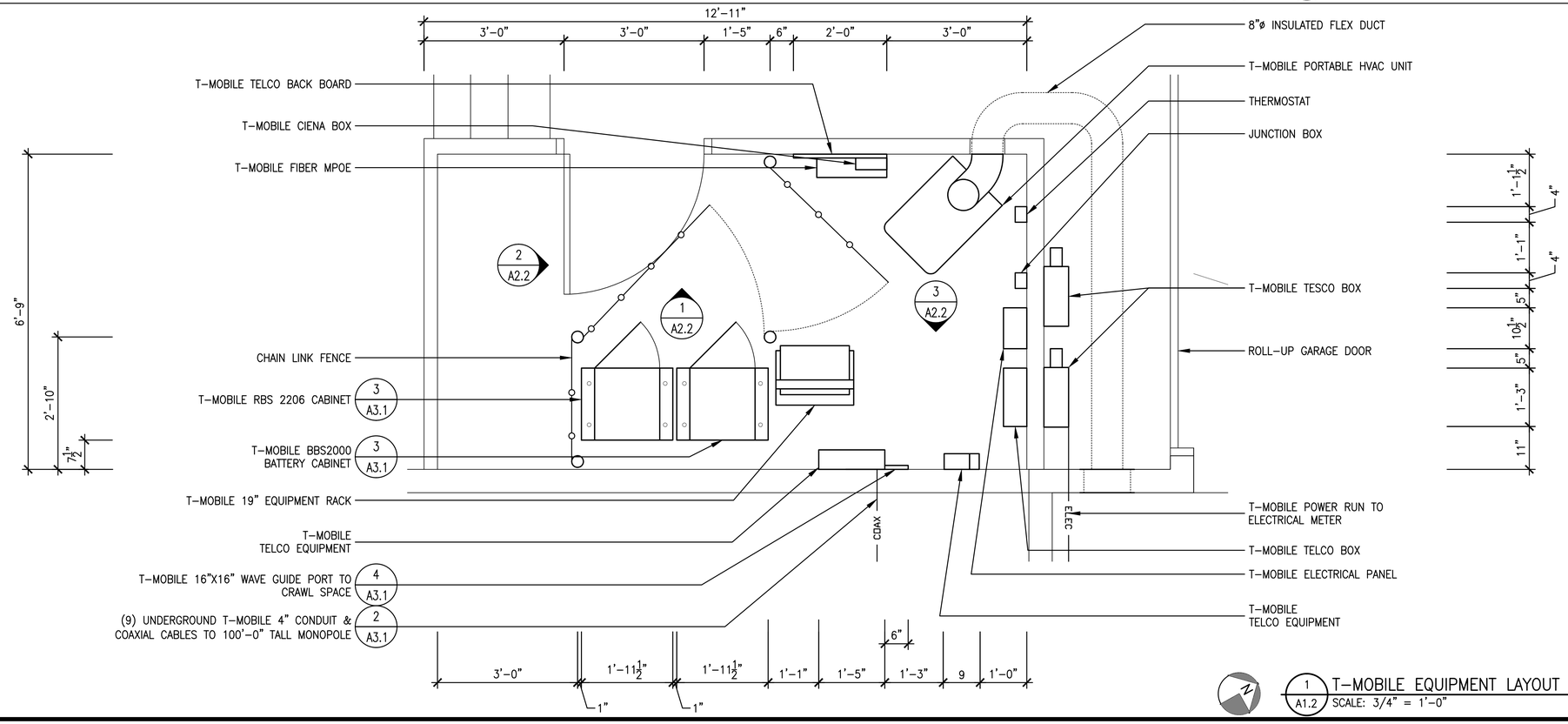

1 A1.2 T-MOBILE EQUIPMENT LAYOUT PLAN
SCALE: 3/4" = 1'-0"

MST ARCHITECTS
WIRELESS DIVISION
1520 River Park Drive, Sacramento, CA 95815
916-567-9630
www.MSTArchitects.com

THESE DRAWINGS AND SPECIFICATIONS AS INSTRUMENTS OF SERVICE, ARE AND SHALL REMAIN THE PROPERTY OF MANUEL S. TSIHLAS, ARCHITECT, INC. WHETHER THE PROJECT FOR WHICH THEY ARE MADE IS EXECUTED OR NOT. THE REPRODUCTION, PUBLICATION OR USE BY OTHERS WITHOUT WRITTEN CONSENT OF THE ARCHITECT IS PROHIBITED. COPYRIGHT, MANUEL S. TSIHLAS, ARCHITECT, INC. ALL RIGHTS RESERVED.

T-Mobile WESTLLC.

SC09453A-SKYLINE DR & HWY 50
1705 SKYLINE WAY
SOUTH LAKE TAHOE, CA 96150

SHEET TITLE: EQUIPMENT LAYOUT PLANS

LICENSED ARCHITECT
MANUEL S. TSIHLAS
No. C-28021
Exp. 08-17
STATE OF CALIFORNIA
Not valid unless signed in ink by licensee.

Revisions:
1 --
2 --
3 --
4 --
5 --

File: 214.520_A12.dwg
Drawn By: AJR
Checked By: MST
Scale: AS NOTED
Date: 01/18/2016

Job No. 214.520

A1.2

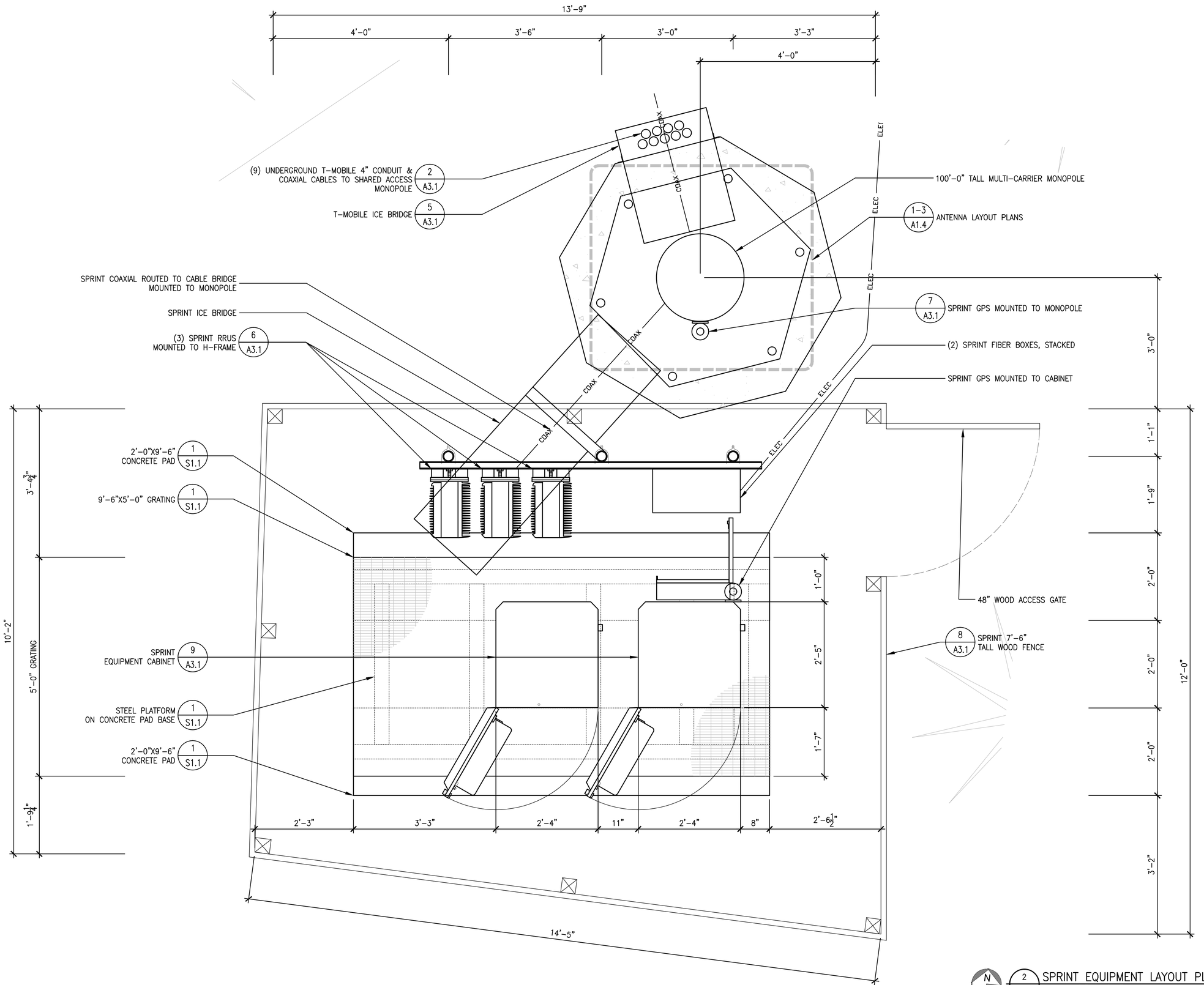

2 A1.2 SPRINT EQUIPMENT LAYOUT PLAN
SCALE: 1/2" = 1'-0"

MST ARCHITECTS
WIRELESS DIVISION
1520 River Park Drive, Sacramento, CA 95815
916-567-9630
www.MSTArchitects.com

THESE DRAWINGS AND SPECIFICATIONS AS INSTRUMENTS OF SERVICE, ARE AND SHALL REMAIN THE PROPERTY OF MANUEL S. TSIHLAS, ARCHITECT, INC. WHETHER THE PROJECT FOR WHICH THEY WERE MADE IS EXECUTED OR NOT. THE REPRODUCTION, ALTERATION OR USE OF THESE DRAWINGS AND SPECIFICATIONS WITHOUT THE WRITTEN CONSENT OF THE ARCHITECT, IS FORBIDDEN AND WILL BE ENFORCED BY LEGAL ACTION. COPYRIGHT, MANUEL S. TSIHLAS, ARCHITECT, INC. ALL RIGHTS RESERVED.

T-Mobile WEST LLC.

SC09453A-SKYLINE DR & HWY 50
1705 SKYLINE WAY
SOUTH LAKE TAHOE, CA 96150

SHEET TITLE: EQUIPMENT LAYOUT PLANS

LICENSED ARCHITECT
MANUEL S. TSIHLAS
No. C-28021
Exp. 08-17
STATE OF CALIFORNIA
Not valid unless signed in ink by licensee.

Revisions:
--
--
--
--
--

File: 214.520_A13.dwg
Drawn By: AJR
Checked By: MST
Scale: AS NOTED
Date: 01/18/2016

Job No. 214.520

A1.3

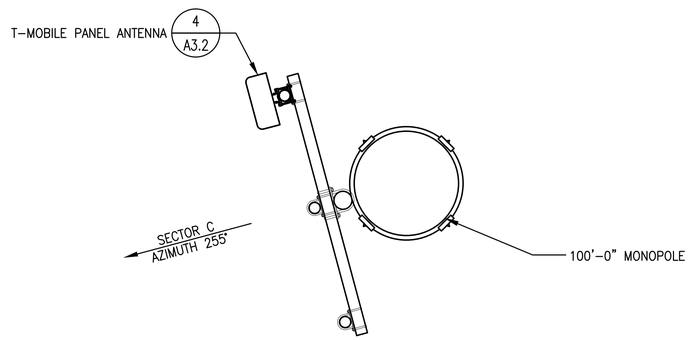

N 4 A1.4 T-MOBILE ANTENNA LAYOUT PLAN @ 94'-0" A.G.L.
SCALE: 1/2" = 1'-0"

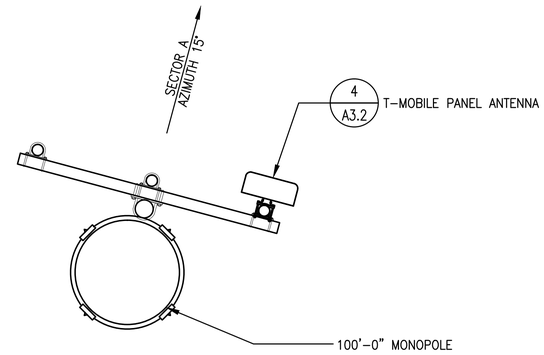

N 2 A1.4 T-MOBILE ANTENNA LAYOUT PLAN @ 80'-0" A.G.L.
SCALE: 1/2" = 1'-0"

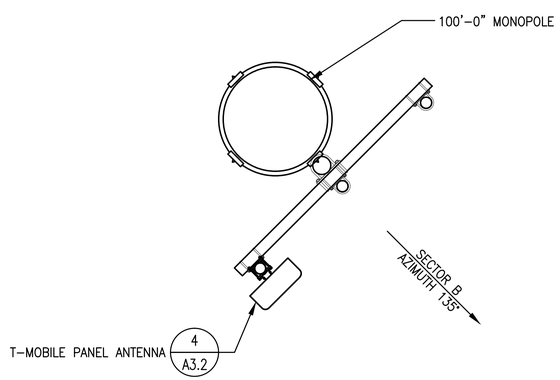

N 3 A1.4 T-MOBILE ANTENNA LAYOUT PLAN @ 87'-0" A.G.L.
SCALE: 1/2" = 1'-0"

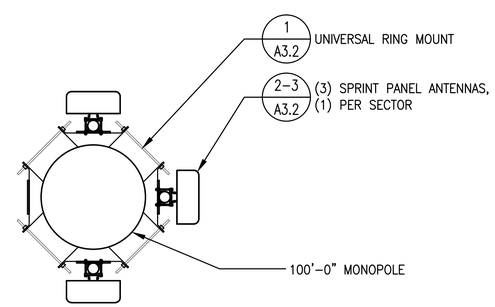

N 1 A1.4 SPRINT ANTENNA LAYOUT PLAN @ 73'-0" A.G.L.
SCALE: 1/2" = 1'-0"

MST ARCHITECTS
WIRELESS DIVISION
1520 River Park Drive, Sacramento, CA 95815
916-567-9630
www.MSTArchitects.com

THESE DRAWINGS AND SPECIFICATIONS AS INSTRUMENTS OF SERVICE, ARE AND SHALL REMAIN THE PROPERTY OF MANUEL S. TSIALAS, ARCHITECT, INC. WHETHER THE PROJECT FOR WHICH THEY ARE MADE IS EXECUTED OR NOT. THE REPRODUCTION, PUBLICATION OR USE BY OTHERS WITHOUT WRITTEN CONSENT OF THE ARCHITECT, IS PROHIBITED. COPYRIGHT, MANUEL S. TSIALAS, ARCHITECT, INC. ALL RIGHTS RESERVED.

T-Mobile WEST LLC.

SC09453A-SKYLINE DR & HWY 50
1705 SKYLINE WAY
SOUTH LAKE TAHOE, CA 96150

SHEET TITLE: ANTENNA LAYOUT PLANS

LICENSED ARCHITECT
MANUEL S. TSIALAS
No. C-28021
Exp. 08-17
STATE OF CALIFORNIA
Not valid unless signed in ink by licensee.

Revisions:
1 --
2 --
3 --
4 --
5 --

File: 214.520_A14.dwg
Drawn By: AJR
Checked By: MST
Scale: AS NOTED
Date: 01/18/2016

Job No. 214.520

A1.4

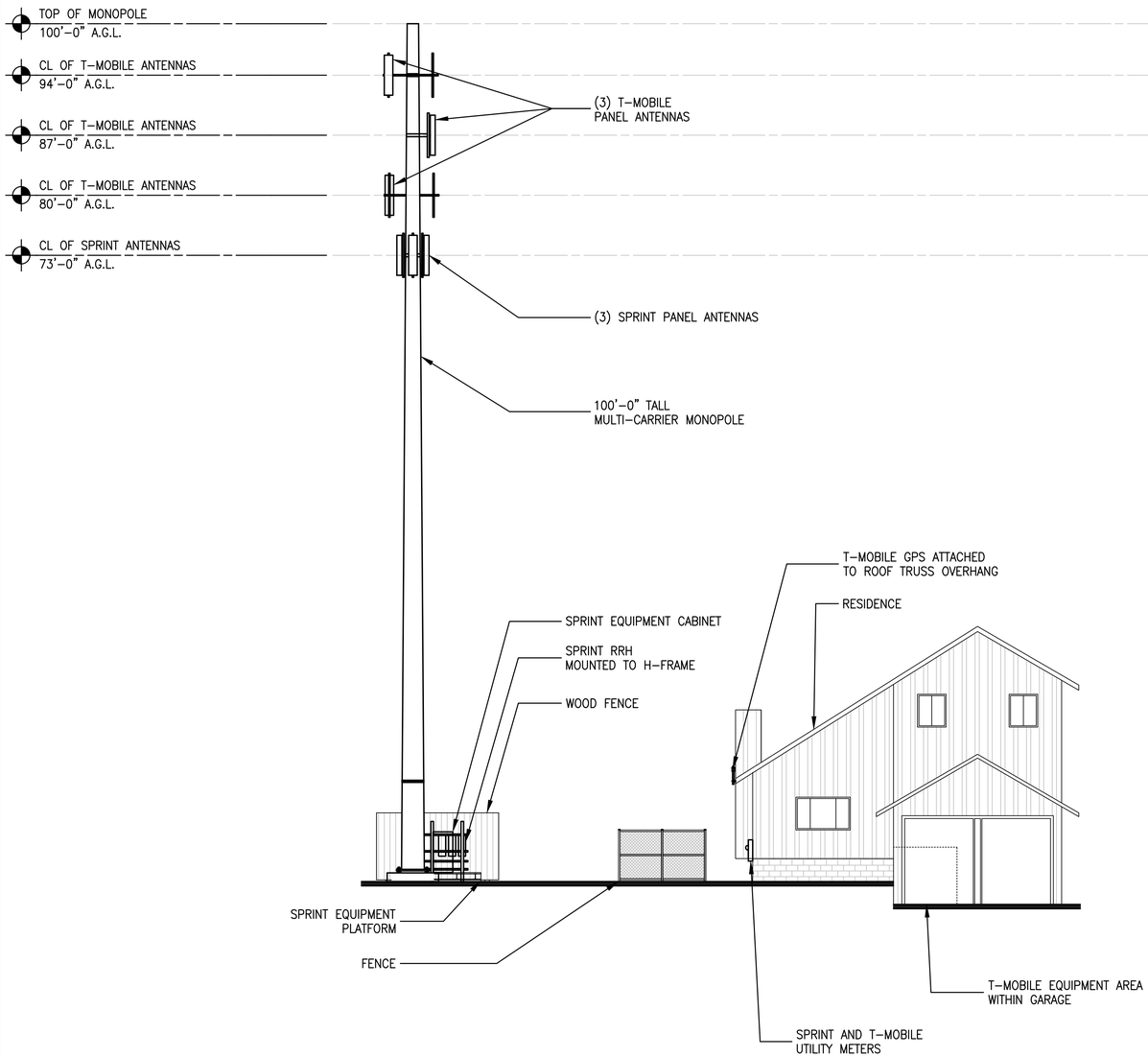

2 A2.1 NORTHEAST ELEVATION
SCALE: 1/8" = 1'-0"

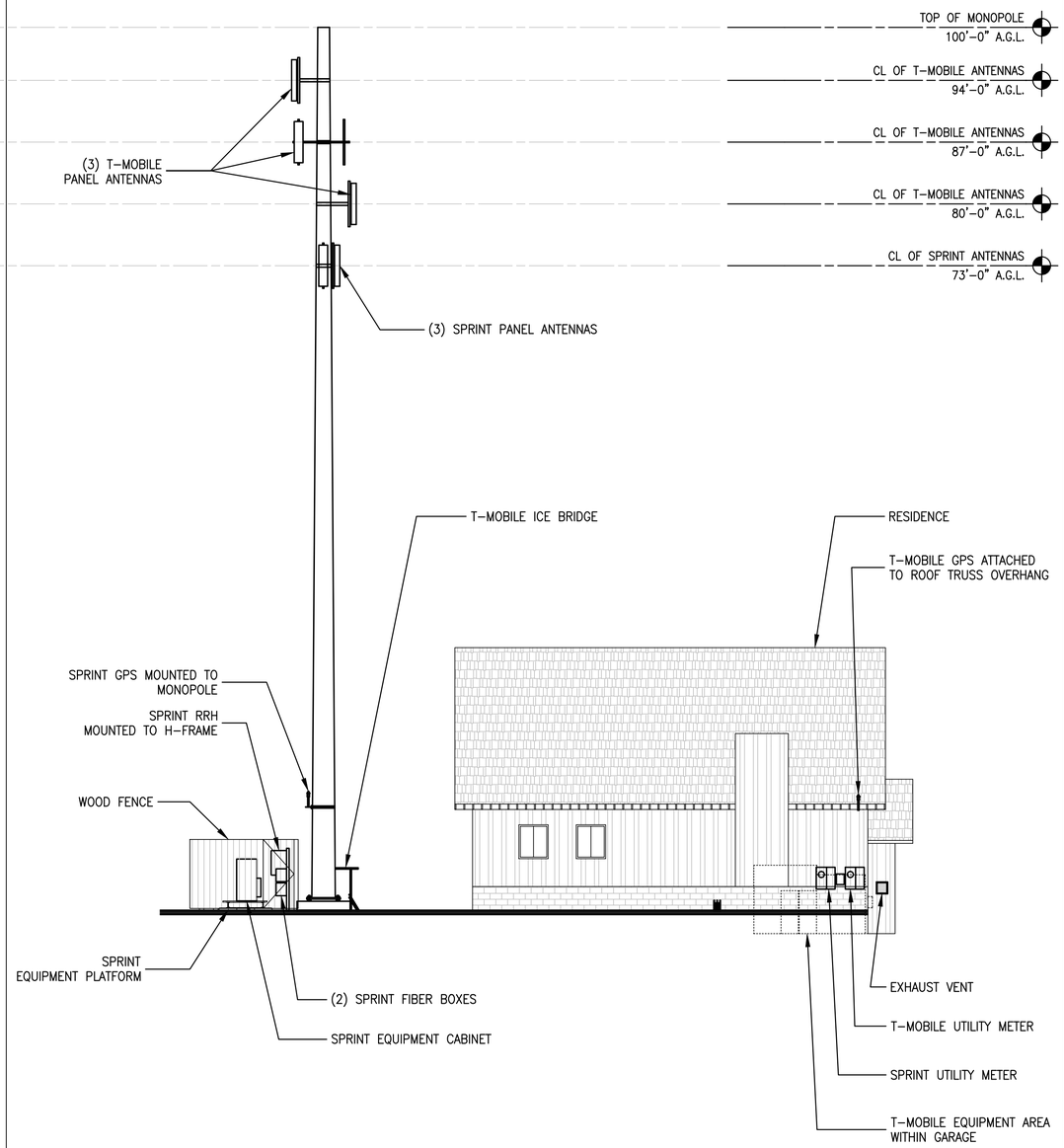

1 A2.1 SOUTHEAST ELEVATION
SCALE: 1/8" = 1'-0"

MST ARCHITECTS
WIRELESS DIVISION
1520 River Park Drive, Sacramento, CA 95815
916-567-9630
www.MSTArchitects.com

THESE DRAWINGS AND SPECIFICATIONS AS INSTRUMENTS OF SERVICE, ARE AND SHALL REMAIN THE PROPERTY OF MANUEL S. TSIHLAS, ARCHITECT, INC. WHETHER THE PROJECT FOR WHICH THEY WERE MADE IS EXECUTED OR NOT. THE REPRODUCTION, PUBLICATION OR USE BY OTHERS OF ANY DESIGNS, IDEAS, OR WRITTEN CONCEPTS OF THE ARCHITECT, COPYRIGHT, MANUEL S. TSIHLAS, ARCHITECT, INC. ALL RIGHTS RESERVED.

T-Mobile WESTLLC.

SC09453A-SKYLINE DR & HWY 50
1705 SKYLINE WAY
SOUTH LAKE TAHOE, CA 96150

SHEET TITLE: PROJECT ELEVATIONS

LICENSED ARCHITECT
MANUEL S. TSIHLAS
No. C-28021
Exp. 08-17
STATE OF CALIFORNIA
Not valid unless signed in ink by licensee.

Revisions:
1 --
2 --
3 --
4 --
5 --

File: 214.520_A21.dwg
Drawn By: AJR
Checked By: MST
Scale: AS NOTED
Date: 01/18/2016

Job No. 214.520

A2.1

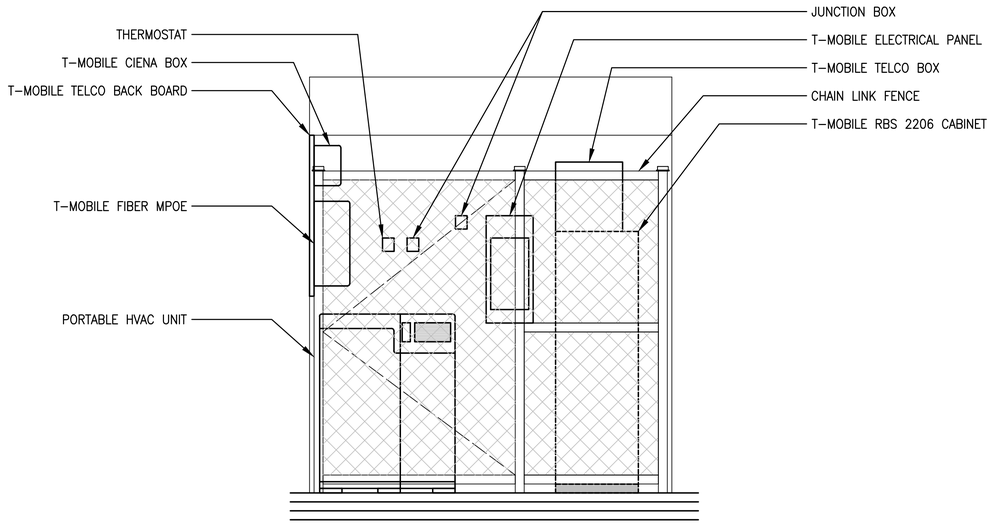

2 A2.2 INTERIOR ELEVATION
SCALE: 3/4" = 1'-0"

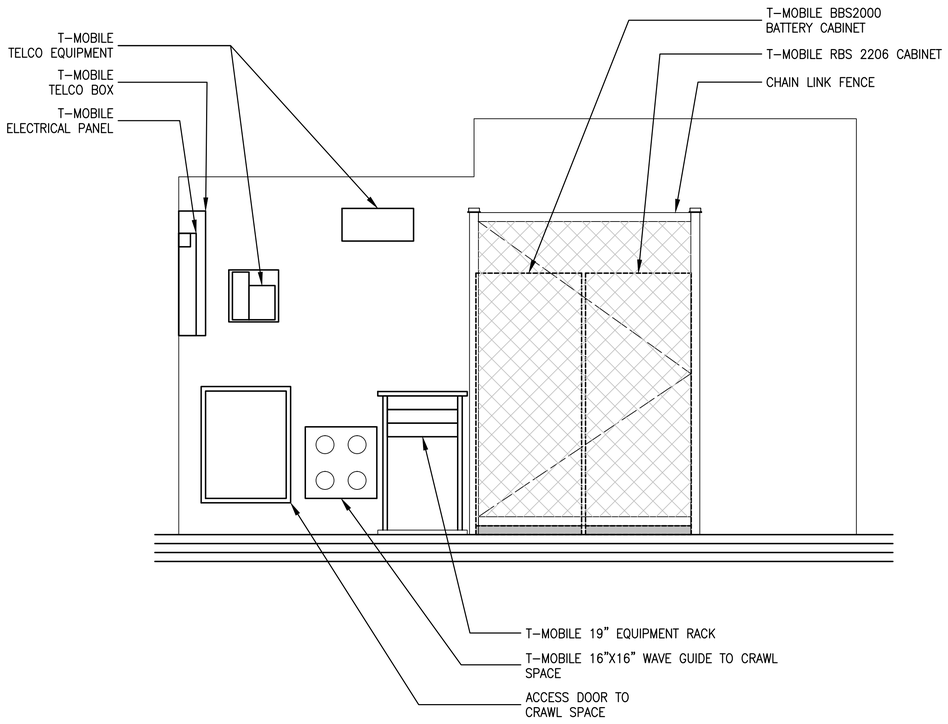

3 A2.2 INTERIOR ELEVATION
SCALE: 3/4" = 1'-0"

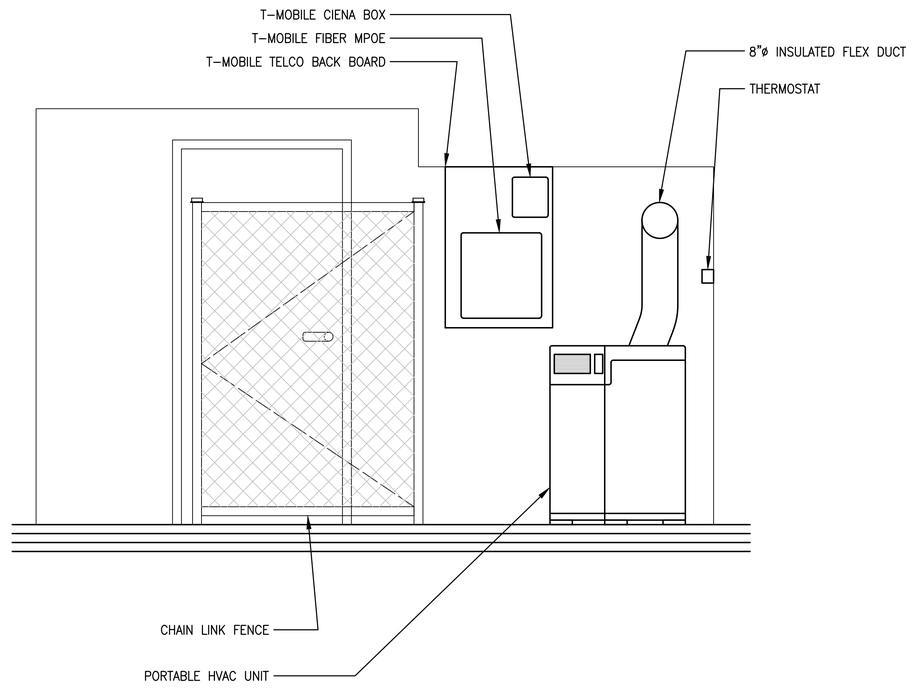

1 A2.2 INTERIOR ELEVATION
SCALE: 3/4" = 1'-0"

MST ARCHITECTS
WIRELESS DIVISION
1520 River Park Drive, Sacramento, CA 95815
916-567-9630
www.MSTArchitects.com

THESE DRAWINGS AND SPECIFICATIONS AS INSTRUMENTS OF SERVICE, ARE AND SHALL REMAIN THE PROPERTY OF MANUEL S. TSIHLAS, ARCHITECT, INC. WHETHER THE PROJECT FOR WHICH THEY WERE MADE EXISTS OR NOT. THESE DRAWINGS AND SPECIFICATIONS ARE TO BE USED ONLY FOR THIS PROJECT AND NOT FOR ANY OTHER PROJECT, EXCEPT BY WRITTEN CONSENT OF THE ARCHITECT. COPYRIGHT, MANUEL S. TSIHLAS, ARCHITECT, INC. ALL RIGHTS RESERVED.

T-Mobile WESTLLC.

SC09453A-SKYLINE DR & HWY 50
1705 SKYLINE WAY
SOUTH LAKE TAHOE, CA 96150

SHEET TITLE: PROJECT ELEVATIONS

LICENSED ARCHITECT
MANUEL S. TSIHLAS
No. C-28021
Exp. 08-17
STATE OF CALIFORNIA
Not valid unless signed in ink by licensee.

Revisions:
--
--
--
--
--

File: 214.520_A21.dwg
Drawn By: AJR
Checked By: MST
Scale: AS NOTED
Date: 01/18/2016

Job No. 214.520

A2.2

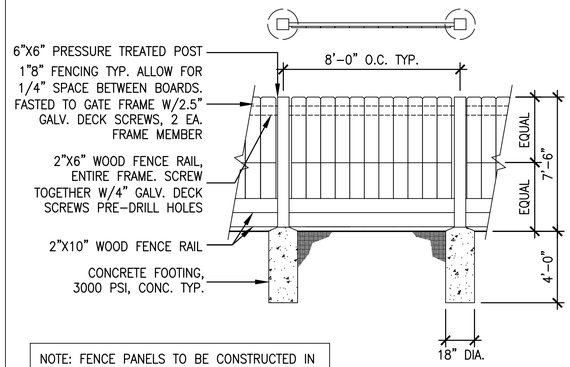

NOTE: FENCE PANELS TO BE CONSTRUCTED IN TWO HORIZONTAL SECTIONS. ALLOW FOR EASY FRAME DISASSEMBLY AND REMOVAL. PROVIDE 4 GARAGE TYPE HANDLES ON THE INSIDE CORNERS FOR HANDLING

8 / A3.1 FENCE PANEL DETAIL
SCALE: N.T.S.

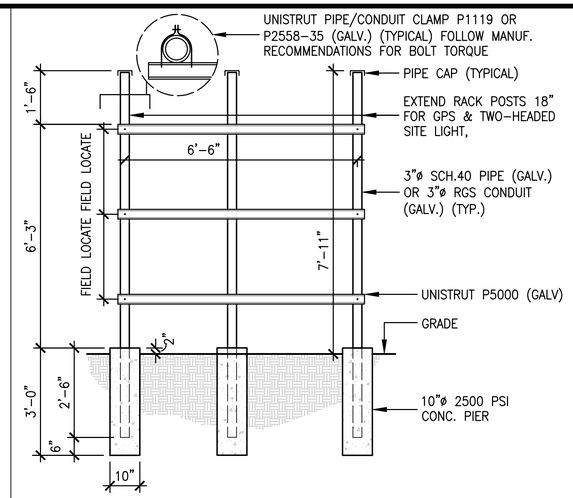

6 / A3.1 H-FRAME DETAIL
SCALE: 1/2"=1'-0"

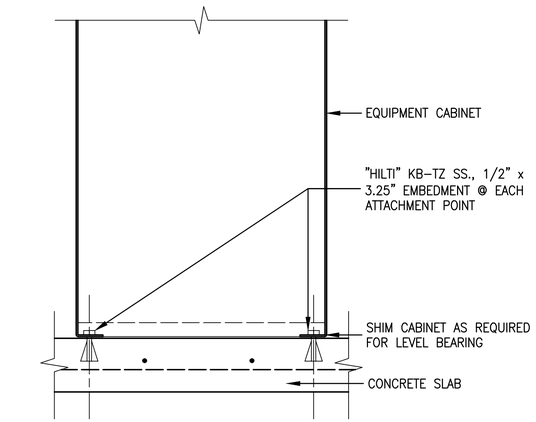

3 / A3.1 CABINET ANCHORAGE DETAIL
SCALE: 1-1/2" = 1'-0"

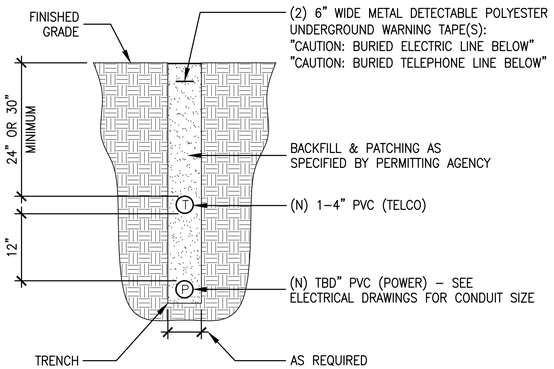

NOTE: RESTORE GRADE TO ORIGINAL CONDITION OR BETTER.
FILL WITH WELL COMPACTED BACKFILL. IF TRENCH IS UNDER CONCRETE PAD, BACKFILL WITH CRUSHED STONE

10 / A3.1 JOINT POWER/TELCO TRENCH DETAIL
SCALE: NONE

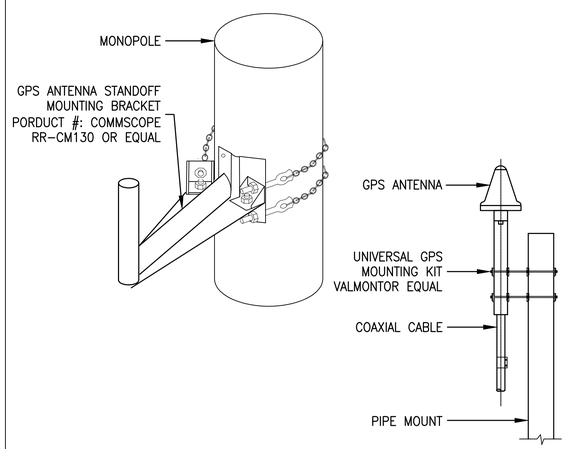

7 / A1.1 GPS MOUNTING DETAIL
SCALE: 1/4" = 1'-0"

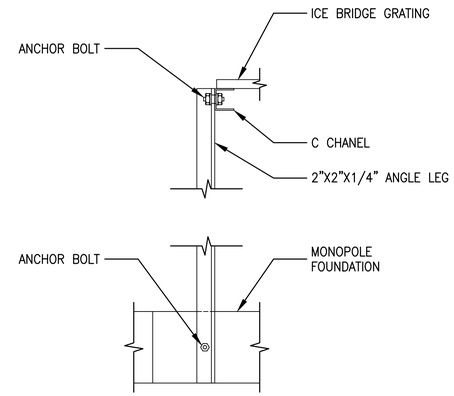

5 / A3.1 ICE BRIDGE DETAIL
SCALE: 1-1/2" = 1'-0"

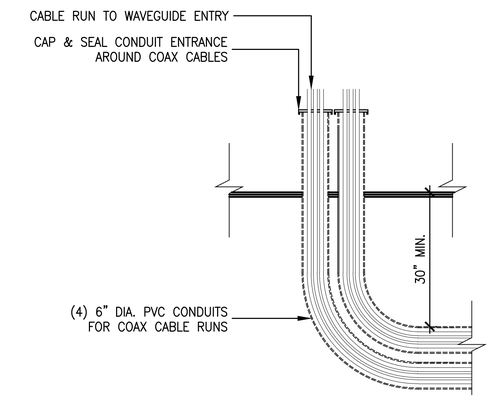

2 / A3.1 COAX CABLE STUB-UP DETAIL
SCALE: 3/4" = 1'-0"

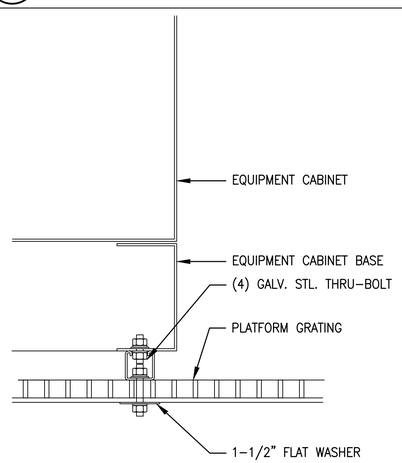

9 / A3.1 CABINET MOUNTING DETAIL
SCALE: 3" = 1'-0"

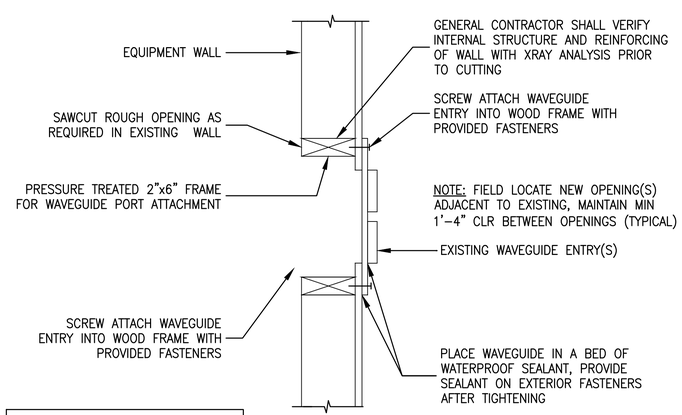

CAULK & SEAL EDGES OF WAVEGUIDE ENTRY WITH WATERPROOF SEALANT

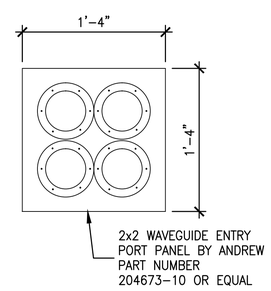

4 / A3.1 COAXIAL CABLE PORT DETAIL
SCALE: 1-1/2" = 1'-0"

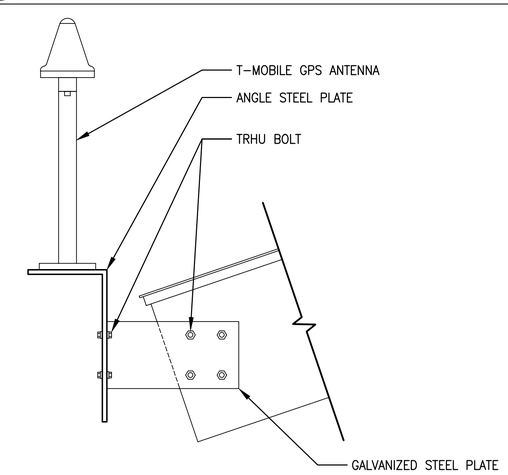

1 / A3.1 GPS MOUNTING DETAIL
SCALE: NO SCALE

MST ARCHITECTS
WIRELESS DIVISION
1520 River Park Drive, Sacramento, CA 95815
916-567-9630
www.MSTArchitects.com

THESE DRAWINGS AND SPECIFICATIONS AS INSTRUMENTS OF SERVICE, ARE AND SHALL REMAIN THE PROPERTY OF MANUEL S. TSIALAS, ARCHITECT, INC. WHETHER THE PROJECT FOR WHICH THEY ARE MADE IS EXECUTED OR NOT. THE REPRODUCTION, ALTERATION OR USE OF THESE DRAWINGS AND SPECIFICATIONS WITHOUT THE WRITTEN CONSENT OF THE ARCHITECT, COPYRIGHT, MANUEL S. TSIALAS, ARCHITECT, INC. ALL RIGHTS RESERVED.

T-Mobile WESTLLC.

SC09453A-SKYLINE DR & HWY 50
1705 SKYLINE WAY
SOUTH LAKE TAHOE, CA 96150

SHEET TITLE: CONSTRUCTION DETAILS

LICENSED ARCHITECT
MANUEL S. TSIALAS
No. C-28021
Exp. 08-17
STATE OF CALIFORNIA
Not valid unless signed in ink by licensee.

Revisions:
1 --
2 --
3 --
4 --
5 --

File:	214.520_A31.dwg
Drawn By:	AJR
Checked By:	MST
Scale:	AS NOTED
Date:	01/18/2016

Job No. 214.520

A3.1

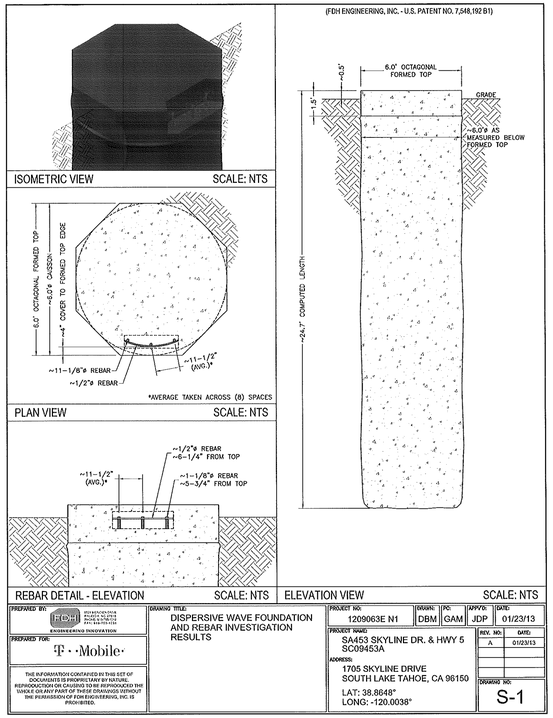

PREPARED BY: FDH ENGINEERING INNOVATION

PREPARED FOR: T··Mobile·

THIS INFORMATION CONTAINED IN THIS SET OF DOCUMENTS IS PROPRIETARY BY NATURE. REPRODUCTION OR CAUSING TO BE REPRODUCED THE WHOLE OR ANY PART OF THESE DRAWINGS WITHOUT THE PERMISSION OF FDH ENGINEERING, INC. IS PROHIBITED.

DRAWING TITLE: DISPERSIVE WAVE FOUNDATION AND REBAR INVESTIGATION RESULTS

PROJECT NO:	DRAWN:	PC:	APRV'D:	DATE:
1209063E N1	DBM	GAM	JDP	01/23/13

PROJECT NAME: SA453 SKYLINE DR. & HWY 5 SC09453A

ADDRESS: 1705 SKYLINE DRIVE SOUTH LAKE TAHOE, CA 96150

LAT: 38.8648° LONG: -120.0038°

REV. NO:	DATE:
A	01/23/13

DRAWING NO: S-1

FDH ENGINEERING INNOVATION
5501 MERIDIEN DRIVE
RALEIGH, NC 27616
PHONE: 919-755-1012
FAX: 919-755-1031
www.FDH-Inc.com

SA453 Skyline Dr. & HWY 5, SC09453A
1705 Skyline Dr.
South Lake Tahoe, CA 96150
January 2, 2012

TOWER BASE

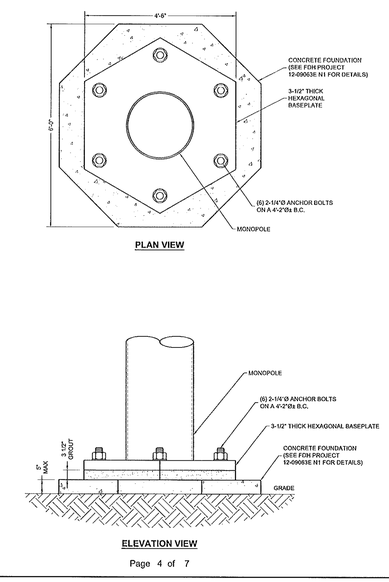

Page 4 of 7

FDH ENGINEERING INNOVATION
5501 MERIDIEN DRIVE
RALEIGH, NC 27616
PHONE: 919-755-1012
FAX: 919-755-1031
www.FDH-Inc.com

SA453 Skyline Dr. & HWY 5, SC09453A
1705 Skyline Dr.
South Lake Tahoe, CA 96150
January 2, 2012

TOWER ELEVATION

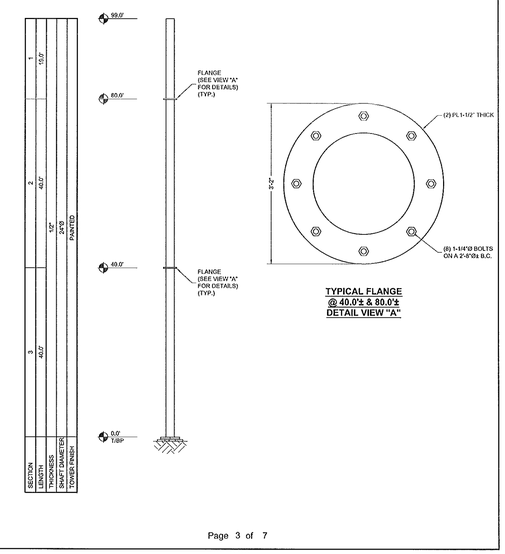

Page 3 of 7

5 / A3.2 TOWER LAYOUT & FOUNDATION DRAWINGS
SCALE: 1/2" = 1'-0"

ALL HARDWARE AND ACCESSORIES SHALL BE GALVANIZED STEEL, ANDREW OR APPROVED EQUAL

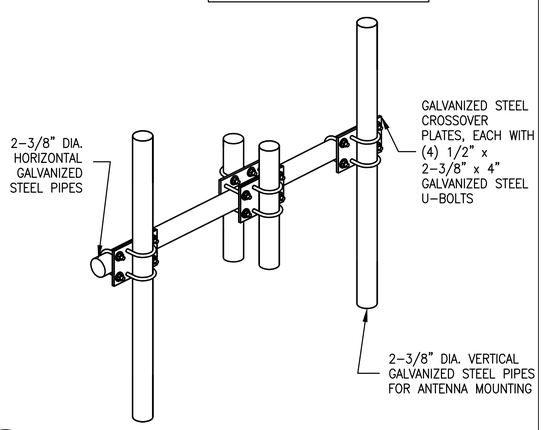

4 / A3.2 ANTENNA PIPE MOUNT DETAIL
SCALE: 1/2" = 1'-0"

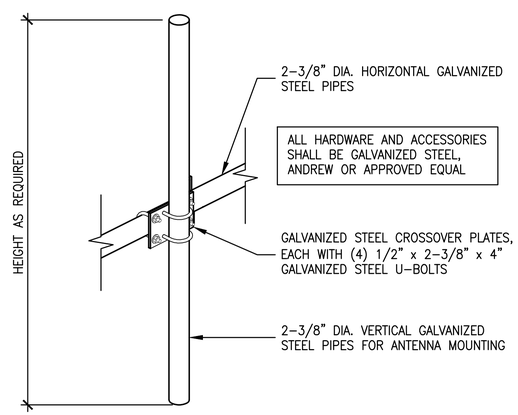

3 / A3.2 ANTENNA PIPE MOUNT DETAIL
SCALE: 1/2" = 1'-0"

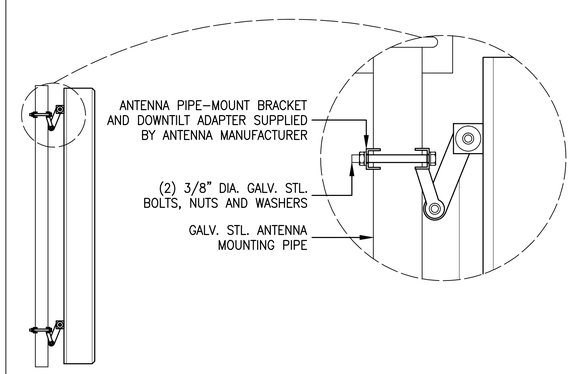

2 / A3.2 ANTENNA MOUNT DETAIL
SCALE: 1/2"=1'-0"

PART #	VMI PART #	SIZE RANGE
UQB4	852361	12" - 60"

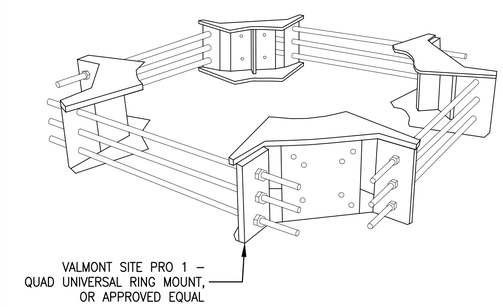

1 / A3.2 QUAD UNIVERSAL RING MOUNT DETAIL
SCALE: NO SCALE

MST ARCHITECTS
WIRELESS DIVISION
1520 River Park Drive, Sacramento, CA 95815
916-567-9630
www.MSTArchitects.com

THESE DRAWING AND SPECIFICATIONS AS INSTRUMENTS OF SERVICE, ARE AND SHALL REMAIN THE PROPERTY OF MANUEL S. TSIHLAS, ARCHITECT, INC., WHETHER THE PROJECT FOR WHICH THEY WERE MADE IS EXECUTED OR NOT. THE REPRODUCTION, IN WHOLE OR IN PART, OF ANY DESIGN OR DETAIL WITHOUT THE WRITTEN CONSENT OF THE ARCHITECT. COPYRIGHT, MANUEL S. TSIHLAS, ARCHITECT, INC. ALL RIGHTS RESERVED.

T··Mobile· WEST LLC.

SC09453A-SKYLINE DR & HWY 50
1705 SKYLINE WAY
SOUTH LAKE TAHOE, CA 96150

SHEET TITLE: CONSTRUCTION DETAILS

LICENSED ARCHITECT
MANUEL S. TSIHLAS
No. C-28021
Exp. 08-17
STATE OF CALIFORNIA
Not valid unless signed in ink by licensee.

Revisions:
1 --
2 --
3 --
4 --
5 --

File: 214.520_A31.dwg
Drawn By: AJR
Checked By: MST
Scale: AS NOTED
Date: 01/18/2016

Job No. 214.520

A3.2

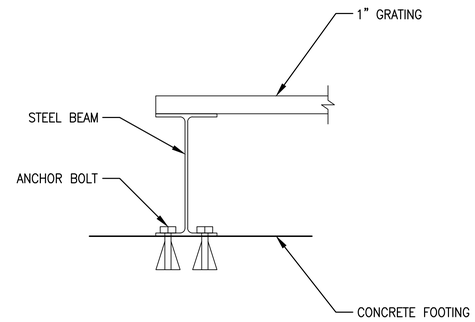

3 S1.1 CONCRETE CONNECTION DETAIL
SCALE: 1-1/2" = 1'-0"

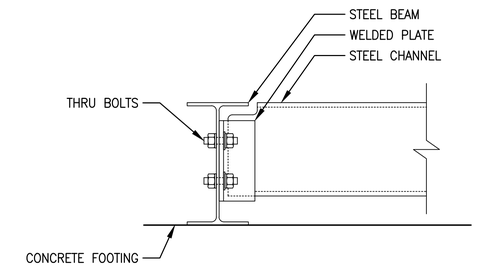

2 S1.1 STEEL CONNECTION DETAIL
SCALE: 1-1/2" = 1'-0"

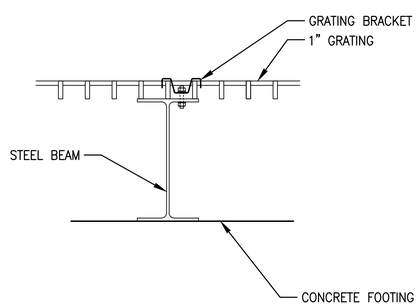

4 S1.1 GRATING CONNECTION DETAIL
SCALE: 1-1/2" = 1'-0"

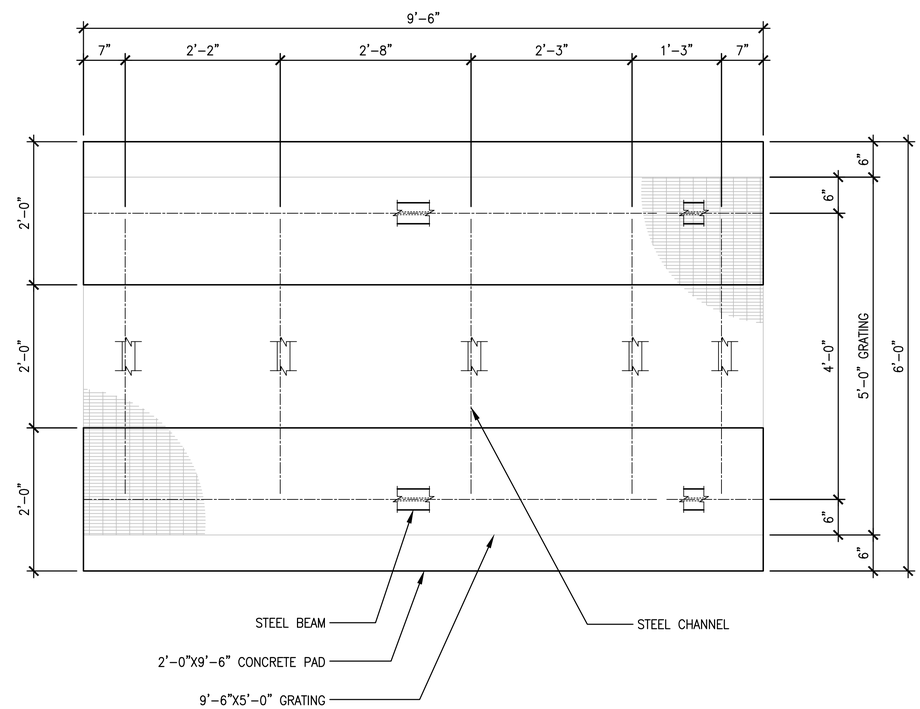

1 S1.1 STRUCTURAL PLATFORM LAYOUT
SCALE: 1" = 1'-0"

MST ARCHITECTS
WIRELESS DIVISION
1520 River Park Drive, Sacramento, CA 95815
916-567-9630
www.MSTArchitects.com

THESE DRAWINGS AND SPECIFICATIONS AS INSTRUMENTS OF SERVICE, ARE AND SHALL REMAIN THE PROPERTY OF MANUEL S. TSIHLAS, ARCHITECT, INC. WHETHER THE PROJECTS FOR WHICH THEY ARE MADE EXISTS OR NOT. THESE DRAWINGS AND SPECIFICATIONS ARE TO BE RETURNED UPON REQUEST. ANY REPRODUCTION OR USE OF THESE DRAWINGS AND SPECIFICATIONS WITHOUT WRITTEN CONSENT OF THE ARCHITECT. COPYRIGHT, MANUEL S. TSIHLAS, ARCHITECT, INC. ALL RIGHTS RESERVED.

T-Mobile WESTLLC.

SC09453A-SKYLINE DR & HWY 50
1705 SKYLINE WAY
SOUTH LAKE TAHOE, CA 96150

SHEET TITLE: STRUCTURAL DETAILS

LICENSED ARCHITECT
MANUEL S. TSIHLAS
No. C-28021
Exp. 08-17
STATE OF CALIFORNIA
Not valid unless signed in ink by licensee.

Revisions:
1 --
2 --
3 --
4 --
5 --

File: 214.520_A31.dwg
Drawn By: AJR
Checked By: MST
Scale: AS NOTED
Date: 01/18/2016

Job No. 214.520

S1.1

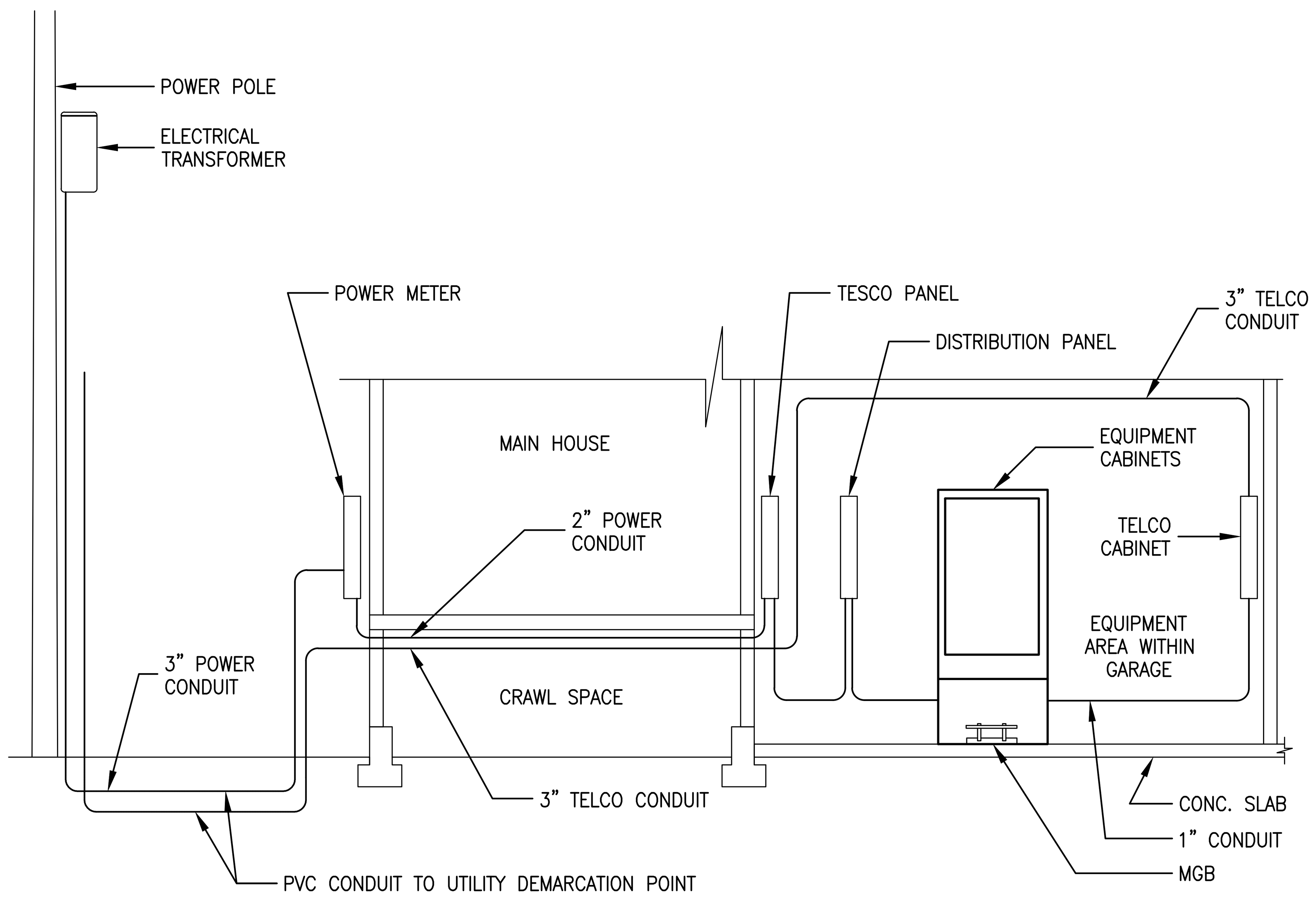

3 / E1.1 RISER DIAGRAM
SCALE: NOT TO SCALE

PANEL CIRCUIT AND LOAD SCHEDULE — **DESIGNATION: PANEL "T-MOBILE"**

	LOAD			LOAD PER PHASE (VA)														LOAD PER PHASE (VA)		LOAD			
				PHASE														PHASE					
	DESCRIPTION	QTY	UNIT VA	A	B	Continuous Load	TRIP	POLES	WIRE	AIC	WIRE TYPE	WIRE TYPE	AIC	WIRE	POLES	TRIP	Continuous Load	A	B	UNIT VA	QTY	DESCRIPTION	
1	BTS	1	1000	1000		☑	15	1	12	10,000	THHN	THHN	10,000	12	1	20	☑	900		180	5	GFCI RECEPTACLES	2
3	BTS	1	1000		1000	☑	15	1	12	10,000	THHN						☐		0				4
5	BTS	1	1000	1000		☑	15	1	12	10,000	THHN	THHN	10,000	12	1	20	☑	300		150	2	LIGHTS	6
7	BTS	1	1000		1000	☑	15	1	12	10,000	THHN						☐		0				8
9	SPARE	1	0	0		☐	20	1				THHN	10,000	12	1	20	☐	1000		1000	1	AC UNIT	10
11	INTAKE FAN	1	300		300	☐	20	1	12	10,000	THHN	THHN	10,000	12	1	20	☐		1000	1000	1		12
13	EXHAUST FAN	1	52	52		☐	20	1	12	10,000	THHN						☐	0					14
					0	☐											☐		0				
				0		☐											☐	0					
					0	☐											☐		0				
				0		☐											☐	0					
					0	☐											☐		0				
				0		☐											☐	0					
					0	☐											☐		0				
				0		☐											☐	0					
					0	☐											☐		0				
				0		☐											☐	0					
					0	☐											☐		0				
				0		☐											☐	0					
					0	☐											☐		0				
				0		☐											☐	0					
	Subtotal Continuous			2000	2000													1200	0	Subtotal Continuous			
	Subtotal Non-Continuous			52	300													1000	1000	Subtotal Non-Continuous			

Voltage:	120/240 1 ph 3w	AIC:	VERIFY W/UTILITY	Total KVA Continuous X 1.25 =	6.50
Bus:	100amps	Main:	LUG	Total KVA Non-Continuous =	2.35
Enclosure:	NEMA 1 INDOOR	Mount:	Surface	TOTAL KVA =	8.85
				Total Amperage =	36.88

1/2" C. EACH W/(3)#12 THHN CU (circuits 1–13)

1/2" C. W/(3)#12 THHN CU (circuit 2)

1/2" C. W/(3)#12 THHN CU (circuit 6)

1/2" C. W/(4)#12 THHN CU (circuits 10, 12)

2 / E1.1 T-MOBILE PANEL SCHEDULE
SCALE: NO SCALE

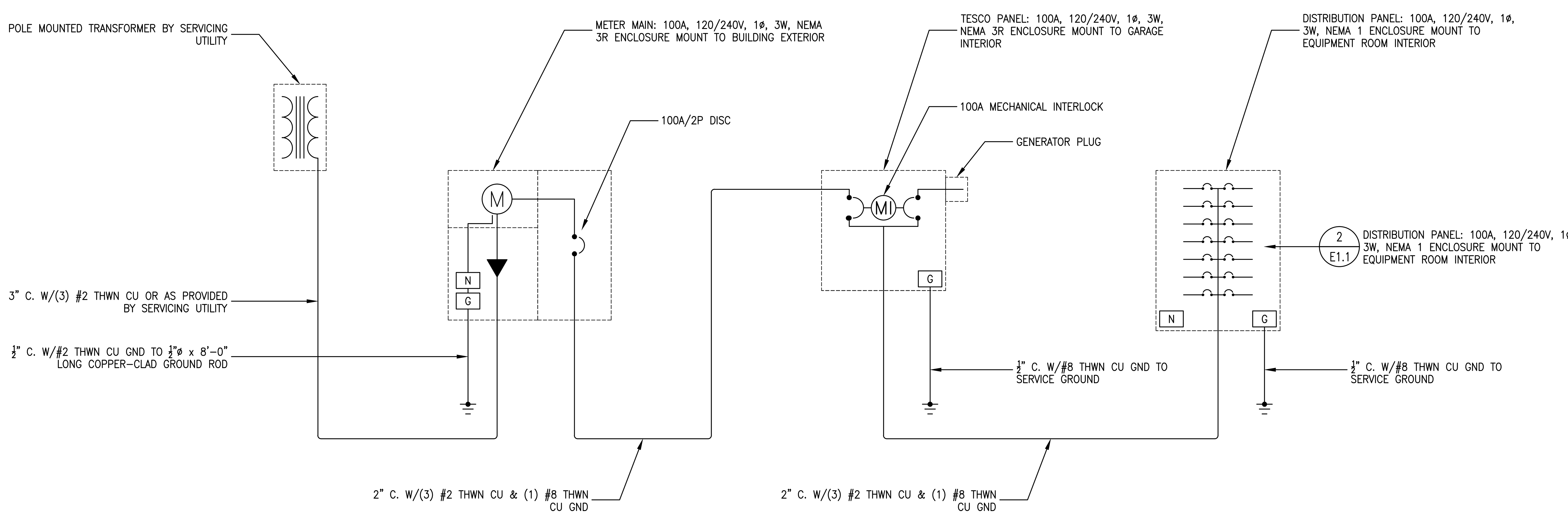

1 / E1.1 T-MOBILE ONE-LINE DIAGRAM
SCALE: NO SCALE

MST ARCHITECTS
WIRELESS DIVISION
1520 River Park Drive, Sacramento, CA 95815
916-567-9630
www.MSTArchitects.com

THESE DRAWINGS AND SPECIFICATIONS, AS INSTRUMENTS OF SERVICE, ARE AND SHALL REMAIN THE PROPERTY OF MANUEL S. TSIHLAS, ARCHITECT, INC., WHETHER THE PROJECTS FOR WHICH THEY ARE MADE ARE EXECUTED OR NOT. THESE DRAWINGS AND SPECIFICATIONS SHALL NOT BE USED BY ANY PERSON OR ENTITY ON OTHER PROJECTS WITHOUT PRIOR WRITTEN CONSENT OF THE ARCHITECT. COPYRIGHT, MANUEL S. TSIHLAS, ARCHITECT, INC. ALL RIGHTS RESERVED.

T-Mobile
WEST LLC.

SC09453A-SKYLINE DR & HWY 50
1705 SKYLINE WAY
SOUTH LAKE TAHOE, CA 96150

SHEET TITLE:
ONE-LINE DIAGRAM, PANEL SCHEDULE

LICENSED ARCHITECT
MANUEL S. TSIHLAS
No. C-28021
Exp. 08-17
STATE OF CALIFORNIA
Not valid unless signed in ink by licensee.

Revisions:
- --
- --
- --
- --
- --

File: 214.520 _E11.dwg
Drawn By: AJR
Checked By: MST
Scale: AS NOTED
Date: 01/18/2016

Job No. 214.520

E1.1

PANEL CIRCUIT AND LOAD SCHEDULE

DESIGNATION: PANEL "HOUSE"

	LOAD DESCRIPTION	QTY	UNIT VA	LOAD PER PHASE (VA) PHASE A	PHASE B	Continuous Load	TRIP	POLES	WIRE	AIC	WIRE TYPE	WIRE TYPE	AIC	WIRE	POLES	TRIP	Continuous Load	LOAD PER PHASE (VA) PHASE A	PHASE B	LOAD UNIT VA	QTY	DESCRIPTION	
1	MAIN DISCONNECT	1		0		☐	200	2	(E)	(E)	(E)	(E)	(E)	(E)	2	100	☐	9000		9000	1	MAIN SUBFEED	2
3		1			0	☐			(E)	(E)	(E)	(E)	(E)	(E)			☐		9000	9000	1		4
5	OUTDOOR RECEPTACLE	1	1200	1200		☐	15	1	(E)	(E)	(E)	(E)	(E)	(E)	1	15	☐	1100		1100	1	FORCED AIR UNIT	6
7	RANGE	1	2500		2500	☐	30	2	(E)	(E)	(E)	(E)	(E)	(E)	1	20	☑		1800	1800	1	LIGHTS & RECEPT	8
9		1	2500	2500		☐			(E)	(E)	(E)	(E)	(E)	(E)	1	20	☑	1800		1800	1	LIGHTS & RECEPT	10
11	**SPRINT MMBS CAB**	**1**	**2200**		**2200**	☑	**100**	**2**	**3**	**10,000**	**THHN**	**THHN**	**10,000**	**12**	**1**	**15**	☑		**800**	**800**	**1**	**SPRINT BBU**	**12**
13		**1**	**2200**	**2200**		☑			**3**	**10,000**	**THHN**	**THHN**	**10,000**	**12**	**1**	**15**	☑	**800**		**800**	**1**	**SPRINT BBU**	**14**
					0	☐											☐		0				
				0		☐											☐	0					
					0	☐											☐		0				
				0		☑											☐	0					
					0	☐											☐		0				
				0		☐											☐	0					
					0	☐											☐		0				
				0		☐											☐	0					
					0	☐											☐		0				
				0		☐											☐	0					
					0	☐											☐		0				
				0		☐											☐	0					
					0	☐											☐		0				
				0		☐											☐	0					
					0	☐											☐		0				
				0		☐											☐	0					
	Subtotal Continuous			2200	2200													2600	2600	Subtotal Continuous			
	Subtotal Non-Continuous			3700	2500													10100	9000	Subtotal Non-Continuous			

Voltage:	120/240 1 ph 3w	AIC:	VERIFY W/UTILITY
Bus:	100amps	Main:	LUG
Enclosure:	NEMA 3R Outdoor	Mount:	Surface

Total KVA Continuous X 1.25 =	**12.00**
Total KVA Non-Continuous =	**25.30**
TOTAL KVA =	**37.30**
Total Amperage =	**155.42**

2" C. W/(3)#3 THHN CU & (1)#8 THHN CU GND

2" C. W/(3)#12 THHN CU EACH CIRCUIT

2 / E1.2 SPRINT PANEL SCHEDULE
SCALE: NO SCALE

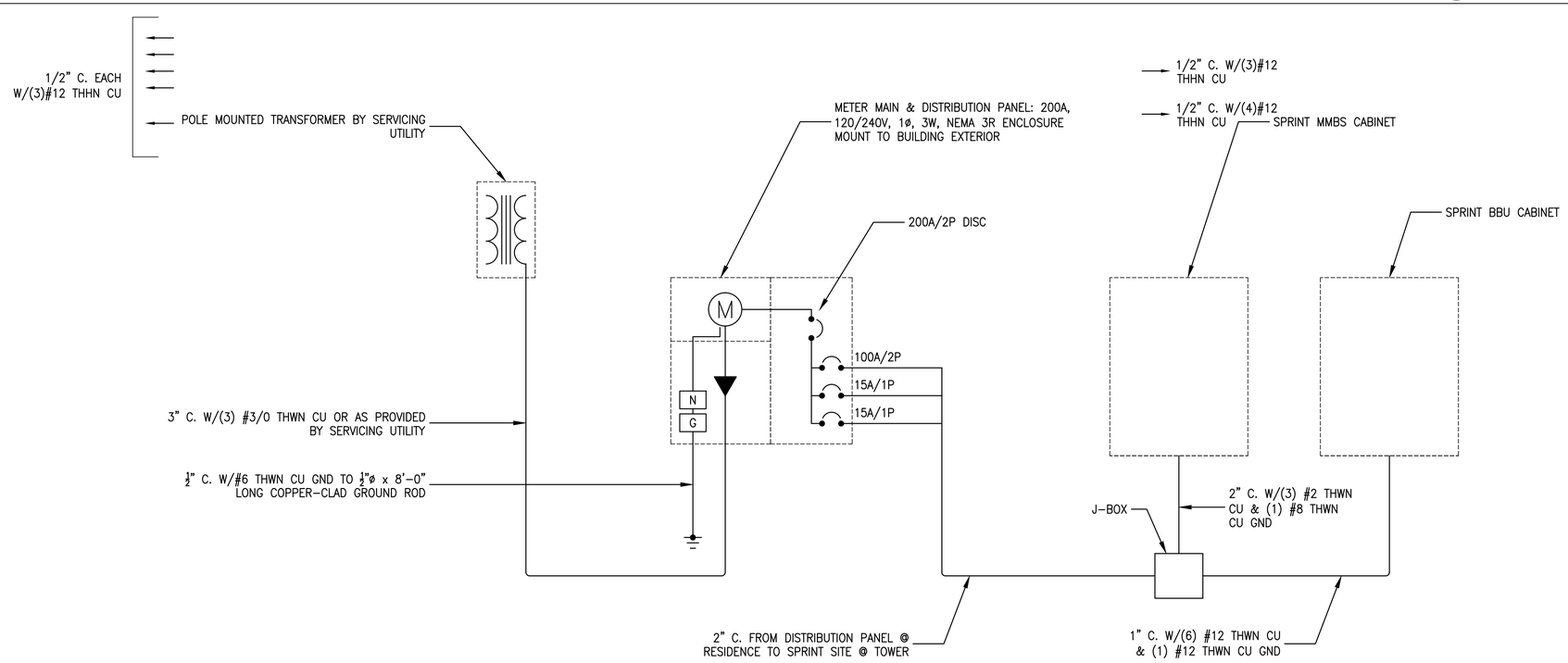

1 / E1.2 SPRINT ONE-LINE DIAGRAM
SCALE: NO SCALE

MST ARCHITECTS
WIRELESS DIVISION
1520 River Park Drive, Sacramento, CA 95815
916-567-9630
www.MSTArchitects.com

THESE DRAWINGS AND SPECIFICATIONS AS INSTRUMENTS OF SERVICE, ARE AND SHALL REMAIN THE PROPERTY OF MANUEL S. TSIALAS, ARCHITECT, INC. WHETHER THE PROJECT FOR WHICH THEY WERE MADE IS EXECUTED OR NOT. THE REPRODUCTION, ALTERATION OR USE OF THESE DRAWINGS AND SPECIFICATIONS WITHOUT WRITTEN CONSENT OF THE ARCHITECT, COPYRIGHT, MANUEL S. TSIALAS, ARCHITECT, INC. ALL RIGHTS RESERVED.

T··Mobile· WESTLLC.

SC09453A-SKYLINE DR & HWY 50
1705 SKYLINE WAY
SOUTH LAKE TAHOE, CA 96150

SHEET TITLE: ONE-LINE DIAGRAM, PANEL SCHEDULE

LICENSED ARCHITECT
MANUEL S. TSIALAS
No. C-28021
Exp. 08-17
STATE OF CALIFORNIA
Not valid unless signed in ink by licensee.

Revisions:
1 --
2 --
3 --
4 --
5 --

File: 214.520 _E12.dwg
Drawn By: AJR
Checked By: MST
Scale: AS NOTED
Date: 01/18/2016

Job No. 214.520

E1.2

Exhibit C

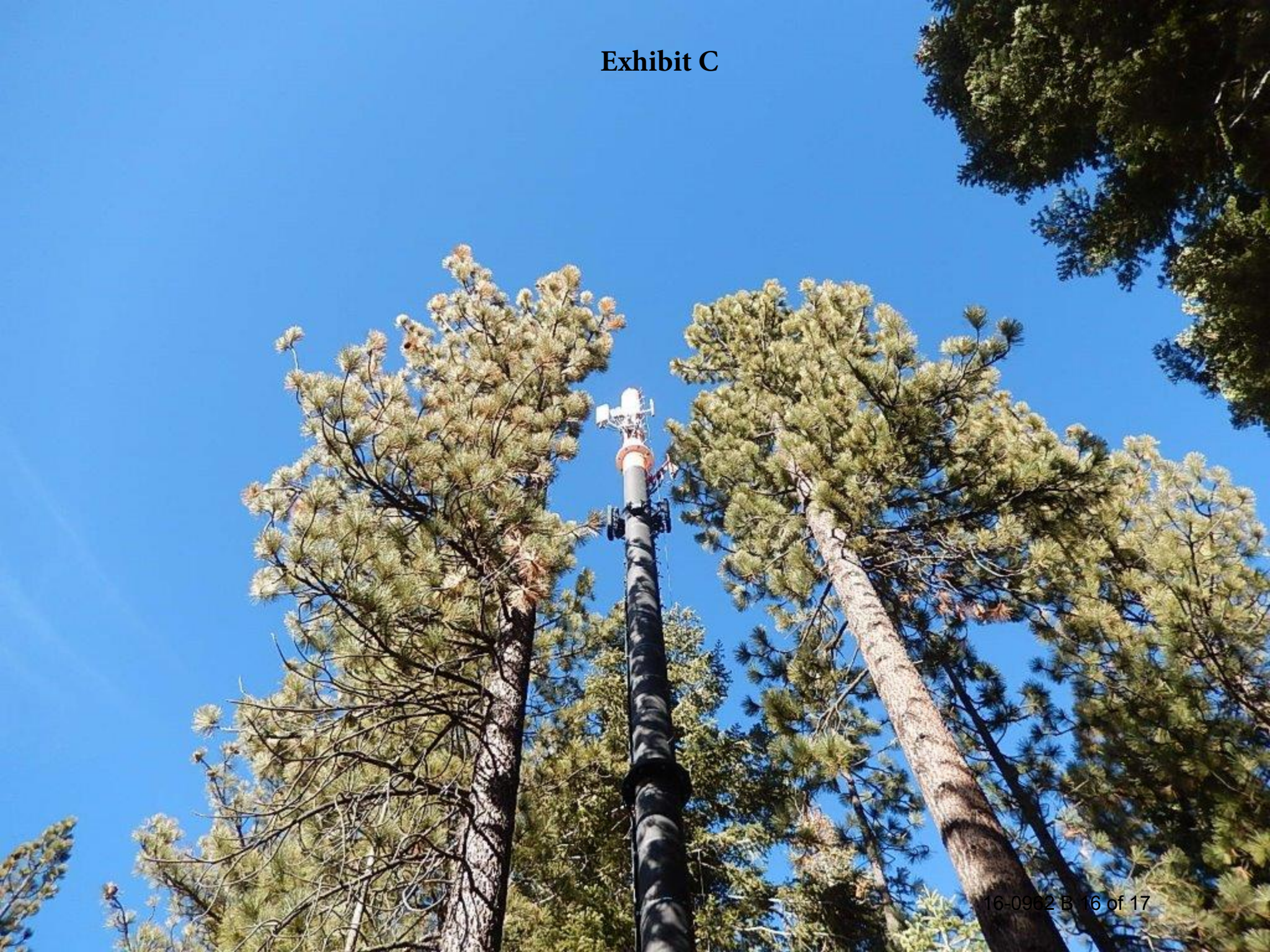

6FJU965