PLACERVILLE SHERIFF

3170 GOLD NUGGET WY, PLACERVILLE, CA 95667
MDG LOCATION ID: 5000940687
PROJECT ID: 17120113

PROJECT DESCRIPTION

A (N) VERIZON WIRELESS UNMANNED TELECOMMUNICATION FACILITY CONSISTING OF INSTALLING:

- REMOVING & REPLACING (E) WOOD MONOPOLE W/ (N) 68' TALL MONOPINE
- (E) EQUIPMENT SHELTER TO BE TAKEN OVER BY VERIZON WIRELESS
- REMOVING & REPLACING (E) SHELTER EQUIPMENT W/ (N) VERIZON WIRELESS SHELTER EQUIPMENT
- REMOVING & REPLACING (E) HVAC UNITS W/ (N) HVAC UNITS
- (N) 50KW DIESEL GENERATOR ON (N) 210 GALLON UL 142 RATED FUEL TANK
- (9) (N) ANTENNAS
- (6) (N) RRH UNITS @ ANTENNAS
- (2) (N) SURGE SUPPRESSORS @ ANTENNAS

PROJECT INFORMATION

SITE NAME:	PLACERVILLE SHERIFF	PROPERTY OWNER:	AMERICAN TOWER CORPORATION 400 REGENCY FOREST DR CARY, NC 27518
MDG LOCATION ID:	5000940687		
COUNTY:	EL DORADO	APPLICANT:	VERIZON WIRELESS 2770 SHADELANDS DR, BLDG 11 WALNUT CREEK, CA 94598
JURISDICTION:	EL DORADO COUNTY		
APN:	325-290-006-000	SITE ACQUISITION COMPANY:	EPIC WIRELESS GROUP 605 COOLIDGE DRIVE, SUITE 100 FOLSOM, CA 95630
SITE ADDRESS:	3170 GOLD NUGGET WY PLACERVILLE, CA 95667	LEASING CONTACT:	ATTN: JASMINE LEARY JASMINE.LEARY@EPICWIRELESS.NET
CURRENT ZONING:	–	ZONING CONTACT:	ATTN: JASMINE LEARY JASMINE.LEARY@EPICWIRELESS.NET
CONSTRUCTION TYPE:	V-B		
OCCUPANCY TYPE:	U, (UNMANNED COMMUNICATIONS FACILITY)	CONSTRUCTION CONTACT:	ATTN: PETE MANAS PETE.MANAS@EPICWIRELESS.NET
POWER:	PG&E		
LATITUDE:	N 38° 43' 35.45" NAD 83 N 38.726513° NAD 83		
LONGITUDE:	W 120° 49' 14.00" NAD 83 W 120.820577° NAD 83		

DESIGN CRITERIA

RISK CATEGORY: II WIND EXPOSURE: C SEISMIC SITE CLASS: D S_{DS}: 0.428	ROOF LIVE LOAD: N/A DESIGN WIND SPEED: 95 MPH SEISMIC DESIGN CATEGORY: D S_{D1}: N/A	FLOOR LIVE LOAD: N/A GROUND ELEVATION: 2,038 FT SEISMIC COMPONENT I_P: 1.0 S_S: 0.444	ALLOW SOIL BEARING: N/A TOPOGRAPHIC CATEGORY: I a_p: 1.0 R_P: 2.5 S_1: 0.208

TESTS AND SPECIAL INSPECTIONS

STREAMLINE ENGINEERING & DESIGN, INC. DOES NOT REQUIRE ANY STRUCTURAL OBSERVATION OR SPECIAL INSPECTION OF ANY STRUCTURAL COMPONENT ABOVE & BEYOND WHAT IS LISTED BELOW UNLESS OTHERWISE REQUIRED BY JURISDICTION.

PROVIDE COMPLETE TESTING AND INSPECTIONS IN ACCORDANCE WITH THE CBC, CHAPTER 17 AS NOTED BELOW:

1. POST INSTALLED ANCHORS IN ACCORDANCE WITH CURRENT ICC REPORTS FOR THE SPECIFIED ANCHORAGES.

VICINITY MAP

DRIVING DIRECTIONS

FROM: 2770 SHADELANDS DR, BLDG 11, WALNUT CREEK, CA 94598
TO: 3170 GOLD NUGGET WY, PLACERVILLE, CA 95667

1.	HEAD SOUTHEAST TOWARD SHADELANDS DR	361 FT
2.	TURN RIGHT ONTO SHADELANDS DR	0.3 MI
3.	TURN LEFT ONTO N WIGET LN	0.2 MI
4.	TURN RIGHT ONTO YGNACIO VALLEY RD	0.6 MI
5.	TURN RIGHT ONTO BANCROFT RD	0.7 MI
6.	USE THE LEFT 2 LANES TO TURN LEFT ONTO TREAT BLVD	1.0 MI
7.	TURN RIGHT ONTO BUSKIRK AVE	0.2 MI
8.	USE THE LEFT LANE TO TAKE THE RAMP ONTO I-680 N	420 FT
9.	MERGE ONTO I-680 N	1.9 MI
10.	KEEP LEFT AT THE FORK TO STAY ON I-680 N	5.9 MI
11.	KEEP LEFT AT THE FORK TO CONTINUE ON I-680	0.1 MI
12.	KEEP RIGHT AT THE FORK TO STAY ON I-680	14.2 MI
13.	USE ANY LANE TO TAKE EXIT 71A TO MERGE ONTO CA-12 E/I-80 E TOWARD I-80 E/SACRAMENTO	41.4 MI
14.	KEEP LEFT TO CONTINUE ON I-80BL E/US-50 E, FOLLOW SIGNS FOR SACRAMENTO/SOUTH LAKE TAHOE/CAPITAL CITY FREEWAY	5.3 MI
15.	KEEP LEFT TO CONTINUE ON US-50 E	39.5 MI
16.	TAKE EXIT 45 FOR RAY LAWYER DR	0.3 MI
17.	CONTINUE ONTO FORNI RD	0.1 MI
18.	TURN RIGHT ONTO GOLD NUGGET WAY	0.2 MI

END AT: 3170 GOLD NUGGET WY, PLACERVILLE, CA 95667

ESTIMATED TIME: 1 HOUR 47 MINUTES ESTIMATED DISTANCE: 112 MILES

CODE COMPLIANCE

ALL WORK & MATERIALS SHALL BE PERFORMED & INSTALLED IN ACCORDANCE WITH THE CURRENT EDITIONS OF THE FOLLOWING CODES AS ADOPTED BY THE LOCAL GOVERNING AUTHORITIES. NOTHING IN THESE PLANS IS TO BE CONSTRUED TO PERMIT WORK NOT CONFORMING TO THESE CODES:

2022 CALIFORNIA ADMINISTRATIVE CODE, PART 1, TITLE 24 C.C.R.
2022 CALIFORNIA BUILDING CODE (CBC), PART 2, VOLUME 1&2, TITLE 24 C.C.R.
(2021 INTERNATIONAL BUILDING CODE AND 2022 CALIFORNIA AMENDMENTS)
2022 CALIFORNIA ELECTRICAL CODE (CEC), PART 3, TITLE 24 C.C.R.
(2020 NATIONAL ELECTRICAL CODE AND 2022 CALIFORNIA AMENDMENTS)
2022 CALIFORNIA MECHANICAL CODE (CMC) PART 4, TITLE 24 C.C.R.
(2021 UNIFORM MECHANICAL CODE AND 2022 CALIFORNIA AMENDMENTS)
2022 CALIFORNIA PLUMBING CODE (CPC), PART 5, TITLE 24 C.C.R.
(2021 UNIFORM PLUMBING CODE AND 2022 CALIFORNIA AMENDMENTS)
2022 CALIFORNIA ENERGY CODE (CEC), PART 6, TITLE 24 C.C.R.
2022 CALIFORNIA FIRE CODE, PART 9, TITLE 24 C.C.R.
(2021 INTERNATIONAL FIRE CODE AND 2022 CALIFORNIA AMENDMENTS)
2022 CALIFORNIA GREEN BUILDING STANDARDS CODE, PART 11, TITLE 24 C.C.R.
2022 CALIFORNIA REFERENCED STANDARDS, PART 12, TITLE 24 C.C.R.
ANSI/EIA-TIA-222-H

ALONG WITH ANY OTHER APPLICABLE LOCAL & STATE LAWS AND REGULATIONS

APPROVED
EL DORADO COUNTY
PLANNING COMMISSION
DATE: May 14, 2026
EXECUTIVE SECRETARY: Karen L. Garner

DISABLED ACCESS REQUIREMENTS

THIS FACILITY IS UNMANNED & NOT FOR HUMAN HABITATION. DISABLED ACCESS & REQUIREMENTS ARE NOT REQUIRED IN ACCORDANCE WITH CALIFORNIA STATE BUILDING CODE, TITLE 24 PART 2, SECTION 11B-203.5

SHEET INDEX

SHEET	DESCRIPTION	REV
T-1.1	TITLE SHEET	–
T-1.2	GENERAL NOTES	–
T-1.3	SIGNAGE DETAILS	–
C-1	TOPOGRAPHIC SURVEY	–
C-2	TOPOGRAPHIC SURVEY	–
A-1.1	OVERALL SITE PLAN	–
A-1.2	ENLARGED SITE PLAN	–
A-1.3	EQUIPMENT PLAN	–
A-1.4	EQUIPMENT PLAN	–
A-2.1	ANTENNA PLAN	–
A-3.1	ELEVATIONS	–
A-4.1	DETAILS	–
A-4.2	DETAILS	– 2
A-5.1	BATTERY SPECIFICATIONS	–
A-5.2	GENERATOR SPECIFICATIONS	–
A-5.3	GENERATOR SPECIFICATIONS	–
A-5.4	GENERATOR SPECIFICATIONS	–
A-5.5	GENERATOR SPECIFICATIONS	–
A-5.6	GENERATOR SPECIFICATIONS	–
S-1.1	STRUCTURAL DETAILS	–
S-1.2	STRUCTURAL DETAILS	– 2
E-1.1	ELECTRICAL PLAN	–
E-1.2	GROUNDING PLANS & DETAILS	–
BMP1	BMP PLAN & DETAIL	– 2
BMP2	BMP DETAILS & NOTES	–

Issued For:

PLACERVILLE SHERIFF

3170 GOLD NUGGET WY, PLACERVILLE, CA 95667

PREPARED FOR

verizon

2770 SHADELANDS DR, BLDG 11
WALNUT CREEK, CA 94598

Vendor:

EPIC WIRELESS GROUP LLC
Connecting a Wireless World

MDG LOCATION ID:	5000940687
PROJECT ID:	17120113
DRAWN BY:	C. COLSTON
CHECKED BY:	S. SAVIG
APPROVED BY:	J. SPORE

ISSUE STATUS

REV	DATE	DESCRIPTION	CAD
3	05/13/26	CLIENT REV	C.C.
2	02/25/26	PLANNING COMMS	T.T.
1	12/18/25	PLANNING COMMS	S.V.
4	09/30/25	CLIENT REV	S.V.
3	09/25/25	CLIENT REV	T.T.
2	02/12/24	CD 100%	S.D.
1	02/06/24	CLIENT REV	S.D.
0	01/11/24	CD 90%	C.T.C

Licensee:

REGISTERED PROFESSIONAL ENGINEER
JAMES R. SPORE
S6336
STRUCTURAL
STATE OF CALIFORNIA

IT IS A VIOLATION OF LAW FOR ANY PERSON, UNLESS THEY ARE ACTING UNDER THE DIRECTION OF A LICENSED PROFESSIONAL ENGINEER, TO ALTER THIS DOCUMENT.

ENGINEER:

Streamline Engineering and Design, Inc.
3943 Taylor Road, Suite A, Loomis, CA 95650
Contact: Kevin Stamm Phone: 916-660-1930
E-Mail: kevin@streamlineeng.com Fax: 916-660-1941

THESE PLANS AND SPECIFICATIONS, AS INSTRUMENTS OF SERVICE, ARE AND SHALL REMAIN THE PROPERTY OF STREAMLINE ENGINEERING & DESIGN, INC. WHETHER THE PROJECT FOR WHICH THEY ARE MADE IS EXECUTED OR NOT. THESE DRAWINGS AND SPECIFICATIONS SHALL NOT BE USED BY ANYONE ON OTHER PROJECTS, EXCEPT BY AGREEMENT IN WRITING AND WITH APPROPRIATE COMPENSATION TO STREAMLINE ENGINEERING. Copyright © 2005 STREAMLINE ENGINEERING AND DESIGN INC. ALL RIGHTS RESERVED.

SHEET TITLE:

TITLE SHEET

SHEET NUMBER:

T-1.1

PROJECT GENERAL NOTES

1. THIS FACILITY IS AN UNOCCUPIED WIRELESS TELECOMMUNICATION FACILITY.
2. PLANS ARE NOT TO BE SCALED AND ARE INTENDED TO BE A DIAGRAMMATIC OUTLINE ONLY, UNLESS NOTED OTHERWISE.
3. THE SCOPE OF WORK SHALL INCLUDE FURNISHING MATERIALS, EQUIPMENT, APPURTENANCES AND LABOR NECESSARY TO COMPLETE ALL INSTALLATIONS AS INDICATED ON THE DRAWINGS.
4. PRIOR TO THE SUBMISSION OF BIDS, THE CONTRACTORS SHALL VISIT THE JOB SITE AND BE RESPONSIBLE FOR ALL CONTRACT DOCUMENTS, FIELD CONDITIONS AND DIMENSIONS, AND CONFIRM THAT THE WORK MAY BE ACCOMPLISHED AS SHOWN PRIOR TO PROCEEDING WITH CONSTRUCTION. ANY DISCREPANCIES ARE TO BE BROUGHT TO THE ATTENTION OF THE CONSTRUCTION MANAGER AND ENGINEER PRIOR TO PROCEEDING WITH THE WORK.
5. IT IS THE RESPONSIBILITY OF THE CONTRACTOR TO PAY FOR PERMIT FEES, AND TO OBTAIN SAID PERMITS AND TO COORDINATE INSPECTIONS.
6. THE CONTRACTOR SHALL RECEIVE, IN WRITING, AUTHORIZATION TO PROCEED BEFORE STARTING WORK ON ANY ITEM NOT CLEARLY DEFINED OR IDENTIFIED BY THE CONTRACT DOCUMENTS.
7. CALL BEFORE YOU DIG. CONTRACTOR IS REQUIRED TO CALL 811 (NATIONWIDE "CALL BEFORE YOU DIG" HOTLINE) AT LEAST 72 HOURS BEFORE DIGGING.
8. ALL WORK PERFORMED AND MATERIALS INSTALLED SHALL BE IN STRICT ACCORDANCE WITH ALL APPLICABLE CODES, REGULATIONS, AND ORDINANCES. CONTRACTOR SHALL GIVE ALL NOTICES AND COMPLY WITH ALL LAWS, ORDINANCES, RULES, REGULATIONS AND LAWFUL ORDERS OF ANY PUBLIC AUTHORITY REGARDING THE PERFORMANCE OF THE WORK.
9. THE GENERAL CONTRACTOR SHALL SUPERVISE AND DIRECT THE WORK USING THE BEST SKILLS AND ATTENTION. THE CONTRACTOR SHALL BE SOLELY RESPONSIBLE FOR ALL CONSTRUCTION MEANS, METHODS, TECHNIQUES, SEQUENCES AND PROCEDURES. CONTRACTOR SHALL ALSO COORDINATE ALL PORTIONS OF THE WORK UNDER THE CONTRACT; INCLUDING CONTACT AND COORDINATION WITH THE CONSTRUCTION MANAGER AND WITH THE LANDLORD'S AUTHORIZED REPRESENTATIVE.
10. THE CONTRACTOR SHALL MAKE NECESSARY PROVISIONS TO PROTECT EXISTING IMPROVEMENTS, PAVING, CURBS, GALVANIZED SURFACES, ETC., AND UPON COMPLETION OF WORK, REPAIR ANY DAMAGE THAT OCCURRED DURING CONSTRUCTION TO THE SATISFACTION OF THE PROJECT MANAGER.
11. KEEP GENERAL AREA CLEAN, HAZARD FREE, AND DISPOSE OF ALL DIRT, DEBRIS AND RUBBISH. REMOVE EQUIPMENT NOT SPECIFIED AS REMAINING ON THE PROPERTY. LEAVE PREMISES IN CLEAN CONDITION AND FREE FROM PAINT SPOTS, DUST, OR SMUDGES OF ANY NATURE.
12. ALL EXISTING INACTIVE SEWER, WATER, GAS, ELECTRIC, AND OTHER UTILITIES, WHICH INTERFERE WITH THE EXECUTION OF THE WORK, SHALL BE REMOVED AND/OR CAPPED, PLUGGED, OR OTHERWISE DISCONNECTED AT POINTS WHICH WILL NOT INTERFERE WITH THE EXECUTION OF THE WORK, AS DIRECTED BY THE RESPONSIBLE ENGINEER, AND SUBJECT TO THE APPROVAL OF THE OWNER AND/OR LOCAL UTILITIES.
13. ALL EXISTING ACTIVE SEWER, WATER, GAS, ELECTRIC AND ALL OTHER UTILITIES WHERE ENCOUNTERED IN THE WORK SHALL BE PROTECTED AT ALL TIMES.
14. DETAILS ARE INTENDED TO SHOW END RESULT OF DESIGN. MINOR MODIFICATIONS MAY BE REQUIRED TO SUIT JOB DIMENSIONS OR CONDITIONS, AND SUCH MODIFICATIONS SHALL BE INCLUDED AS PART OF THE WORK.
15. THE CONTRACTOR SHALL PROVIDE A TOILET FACILITY DURING ALL PHASES OF CONSTRUCTION.
16. SUFFICIENT MONUMENTATION WAS NOT RECOVERED TO ESTABLISH THE POSITION OF THE BOUNDARY LINES SHOWN HEREON. THE BOUNDARY REPRESENTED ON THIS MAP IS BASED ON COMPILED RECORD DATA AND BEST FIT ONTO EXISTING IMPROVEMENTS. IT IS POSSIBLE FOR THE LOCATION OF THE SUBJECT PROPERTY TO SHIFT FROM THE PLACEMENT SHOWN HEREON WITH ADDITIONAL FIELD WORK AND RESEARCH. THEREFORE ANY SPATIAL REFERENCE MADE OR SHOWN BETWEEN THE RELATIONSHIP OF THE BOUNDARY LINES SHOWN HEREON AND EXISTING GROUND FEATURES, EASEMENTS OR LEASE AREA IS INTENDED TO BE APPROXIMATE AND IS SUBJECT TO VERIFICATION BY RESOLVING THE POSITION OF THE BOUNDARY LINES.
17. THE CONTRACTOR TO VERIFY THE LATEST/CURRENT RF DESIGN.
18. WHERE APPLICABLE, CONTRACTOR SHALL PROVIDE SEPARATE PLANS, SPECIFICATIONS, FEES AND PERMITS FOR ANY REVISION TO ANY FIRE SPRINKLER AND/OR ALARM SYSTEM ON THE PREMISES AS MAY BE NEEDED TO COMPLETE THE WORK DEPICTED HEREIN, USING A LICENSED SUBCONTRACTOR FOR ALL SUCH WORK.

TRENCHING NOTES

1. CALL BEFORE YOU DIG. CONTRACTOR IS REQUIRED TO CALL 811 (NATIONWIDE "CALL BEFORE YOU DIG" HOTLINE) AT LEAST 72 HOURS BEFORE DIGGING.
2. VERIFY ALL TRENCHING REQUIREMENTS WITH SERVING UTILITIES.
3. RESTORE GRADE TO ORIGINAL CONDITION OR BETTER.
4. RETURN FILL TO 95% OF MAXIMUM DENSITY IN ACCORDANCE WITH ASTM STANDARDS.
5. RESTORE CUT CONCRETE OR ASPHALT TO ORIGINAL CONDITION OR BETTER.

At all services & grounding trenches, provide " WARNING" tape at 12" below grade.

CALL
"CALL BEFORE YOU DIG"
811
NATIONWIDE UNDERGROUND SERVICE ALERT

CONSTRUCTION NOTES

1. EXISTING BUILDING CONSTRUCTION CONDITIONS INDICATED ON THE DRAWINGS SHALL BE FIELD VERIFIED BY THE CONTRACTOR PRIOR TO PROCEEDING WITH CONSTRUCTION OR ORDERING OF MATERIALS. IF EXISTING CONDITIONS DO NOT ALLOW FOR DETAILS OF CONSTRUCTION AS SHOWN ON THESE DRAWINGS, NOTIFY ENGINEER OF RECORD FOR RESOLUTION PRIOR TO PROCEEDING. CONTRACTOR SHALL EXPOSE AND REVIEW EXISTING CONDITIONS IN A TIMELY MANNER SUCH THAT ALTERNATE DESIGNS OR DETAILS, IF REQUIRED, MAY BE GENERATED WITHOUT DELAY TO THE PROJECT.
2. DURING CONSTRUCTION, THE CONTRACTOR SHALL NOT ALTER, DAMAGE OR REMOVE ANY PART OF THE EXISTING STRUCTURE UNLESS SPECIFICALLY DETAILED ON THESE DRAWINGS.
3. THE INTENT OF THESE DRAWINGS IS THAT THE WORK OF THE ADDITION, ALTERATION, REHABILITATION, OR RECONSTRUCTION IS TO BE IN ACCORDANCE WITH THE 2022 CBC. SHOULD ANY EXISTING CONDITIONS SUCH AS DETERIORATION OR NONCOMPLYING CONSTRUCTION BE DISCOVERED WHICH IS NOT COVERED BY THE CONTRACT DOCUMENTS WHEREIN THE FINISHED WORK WILL NOT COMPLY WITH THE 2022 CBC, A CHANGE ORDER, OR A SEPARATE SET OF PLANS AND SPECIFICATIONS, DETAILING AND SPECIFYING THE REQUIRED WORK SHALL BE PREPARED AND SUBMITTED TO AND APPROVED BY THE BUILDING DEPARTMENT PRIOR TO PROCEEDING WITH THE WORK.
4. ALL WORK AND MATERIALS SHOWN ARE NEW UNLESS INDICATED AS EXISTING (E).
5. IT MAY BE NECESSARY TO REMOVE ARCHITECTURAL FINISHES, PLUMBING PIPES AND FIXTURES, ELECTRICAL CONDUIT, FIXTURES, PANELS, BOXES, TELEPHONE OR FIRE ALARM WIRING AND FIXTURES OR OTHER NON-STRUCTURAL ITEMS TO INSTALL STRUCTURAL WORK AND MATERIALS SHOWN ON THESE DRAWINGS. SUCH ITEMS SHALL BE REMOVED, REPAIRED AND/OR REPLACED TO MATCH PRE-CONSTRUCTION CONDITIONS AT THE CONTRACTORS EXPENSE.
6. ALL WEATHER PROOFING. INCLUDING BUT NOT LIMITED TO TORCH DOWN, CAULKING, Z-FLASHING OR ANY OTHER MATERIAL THAT MAY BE ALTERED DURING INSTALLATION SHALL BE REPAIRED REPLACED AND/OR MODIFIED TO ENSURE THE BUILDING AT THE INSTALLATION SITE IS WEATHER PROOF.
7. ANY PROPOSED SUBSTITUTIONS FOR STRUCTURAL MEMBERS, HARDWARE, ANCHOR TYPES, OR DETAILING INDICATED IN THESE DRAWINGS SHALL BE SUBMITTED TO AND REVIEWED BY THE ENGINEER OF RECORD PRIOR TO ORDERING MATERIALS. SUCH REVIEW SHALL BE BILLED ON A TIME AND MATERIALS BASIS TO THE CONTRACTOR WITH NO GUARANTEE THAT THE SUBSTITUTION WILL BE ALLOWED.
8. CONTRACTOR SHALL ENSURE ALL ROOF AREAS HAVE POSITIVE SLOPE TO ALL EXISTING ROOF DRAINS. PROVIDE ADDITIONAL CRICKETS OR BUILD UP ROOFING AS REQUIRED TO PROVIDE POSITIVE DRAINAGE AROUND ALL NEW CONSTRUCTION INCLUDING ANY CURBS, SLEEPERS, SUPPORT BASES, ETC.

STRUCTURAL STEEL NOTES

1. ALL STEEL CONSTRUCTION INCLUDING FABRICATION, ERECTION AND MATERIALS SHALL COMPLY WITH ALL REQUIREMENTS OF THE 2016 AISC SPECIFICATION FOR THE DESIGN, FABRICATION, AND ERECTION OF STRUCTURAL STEEL FOR BUILDINGS AND THE 2022 CBC.
2. ALL STRUCTURAL STEEL SHALL BE ASTM A36 UNLESS OTHERWISE NOTED. ALL WF (WIDE FLANGE) & WT (TEE) SHAPES TO BE ASTM A992 (F_Y=50,000 PSI) UNLESS NOTED OTHERWISE. ALL STRUCTURAL TUBING (TS OR HSS) SHALL BE ASTM A500 GRADE B (F_Y=46,000 PSI). ALL STEEL PIPE SHALL BE ASTM A53 (TYPE E OR S, GRADE B (F_Y=35,000 PSI)) SCHEDULE 40 WITH OUTSIDE DIAMETERS GIVEN UNLESS OTHERWISE NOTED.
3. ALL WELDING SHALL BE PERFORMED USING E70XX ELECTRODES UNLESS OTHERWISE NOTED AND SHALL CONFORM TO AISC & AWS D1.4. WHERE FILLET WELD SIZES ARE NOT SHOWN PROVIDE THE MINIMUM SIZE PER TABLE J2.4 IN THE AISC SPECIFICATION. PAINTED SURFACES SHALL BE TOUCHED UP.
4. ALL WELDING SHALL BE PERFORMED BY QUALIFIED, CERTIFIED WELDERS.
5. HIGH STRENGTH BOLTS SHALL BE GALVANIZED ASTM F3125/F3125M GRADE A325 MINIMUM. BOLTED CONNECTIONS SHALL BE BEARING TYPE. SEE PLANS FOR LOCATION, NUMBER, & SIZE OF BOLTS.
6. HIGH STRENGTH BOLT NUTS SHALL BE ASTM A563/A563M AND WASHERS SHALL BE ASTM F436/ F436M.
7. THREADED RODS SHALL BE SAE J429, GRADE 2 U.O.N.
8. ALL HOLES FOR BOLTED CONNECTIONS SHALL BE 1/16" LARGER THAN THE NOMINAL BOLT DIAMETER. USE STANDARD AISC GAGE AND PITCH FOR BOLTS EXCEPT AS NOTED OTHERWISE. HOLES FOR ANCHOR BOLTS IN BASE PLATES MAY BE AISC "OVERSIZE" HOLES WHERE ACCOMPANIED BY OVERSIZED HARDENED HOT DIPPED GALVANIZED WASHERS.
9. ALL SHOP FABRICATED STEEL STRUCTURAL MEMBERS FOR EXTERIOR USE SHALL BE HOT DIP GALVANIZED PER ASTM A123 AFTER FABRICATION & PAINTED PER CUSTOMER SPECIFICATIONS AS REQUIRED. STEEL FOR INTERIOR USE SHALL BE SHOP COAT OR GALVANIZED & PAINTED.
10. ALL FIELD FABRICATED GALVANIZED STEEL THAT IS CUT, GROUND, DRILLED, WELDED OR DAMAGED SHALL BE TREATED WITH "ZINC RICH" COLD GALVANIZING SPRAY OR COATING. NO RAW STEEL SHALL BE EXPOSED.
11. AT ALL WEB STIFFENER PLATES LEAVE ¾"ø (OR K, WHICHEVER IS LARGER) HOLE @ WEB/FLANGE INTERSECTION UNLESS NOTED OTHERWISE.
12. U-BOLTS AT ANTENNA & RRU MOUNT TO BE GALVANIZED SAE J429, GRADE 2 WITH J995 NUTS U.O.N.
13. ALL STRUT MEMBERS USED IN EXTERIOR APPLICATIONS SHALL BE HOT DIPPED GALVANIZED PER ASTM A123 OR ASTM A153.
14. ALL STAINLESS STEEL BOLTED CONNECTIONS SHALL BE ASTM F593-17 ALLOY GROUP 1 OR 2 AND STAINLESS STEEL NUTS SHALL BE ASTM F594-09 (2015).

CONCRETE NOTES

1. ALL CONCRETE CONSTRUCTION SHALL CONFORM TO ACI 318-19. CONCRETE MIX DESIGN SHALL BE REVIEWED BY AN INDEPENDENT TESTING LABORATORY AND SUBMITTED TO THE ENGINEER OF RECORD FOR REVIEW.
2. CONTRACTOR SHALL VERIFY SITE CONDITIONS & ALL DIMENSIONS PRIOR TO STARTING WORK. NOTIFY ENGINEER OF RECORD OF ANY DISCREPANCIES FOR RESOLUTION PRIOR TO PROCEEDING.
3. ALL CONCRETE SHALL BE A MINIMUM 5 SACK MIX WITH A MINIMUM COMPRESSIVE STRENGTH OF 2500 PSI AT 28 DAYS.
4. CEMENT SHALL CONFORM TO ASTM C150, TYPE II.
5. CONCRETE AGGREGATES SHALL CONFORM TO ASTM C33.
6. ALL REINFORCING STEEL SHALL BE GRADE 60 AND CONFORM TO ASTM A615 UNLESS OTHERWISE NOTED. SEE PLAN FOR SIZE AND PLACEMENT.
7. WELDED WIRE FABRIC SHALL CONFORM TO ASTM A1064.
8. REINFORCING STEEL SHALL BE FABRICATED ACCORDING TO "MANUAL OF STANDARD PRACTICE FOR REINFORCED CONCRETE CONSTRUCTION".
9. MINIMUM LAP SPLICE SHALL BE 56 BAR DIAMETERS UNLESS OTHERWISE NOTED.
10. MINIMUM BEND DIAMETER SHALL BE 6 BAR DIAMETERS UNLESS OTHERWISE NOTED.
11. MINIMUM REINFORCING COVERAGE IS 3" UNLESS OTHERWISE NOTED.
12. CONCRETE SHALL BE PLACED AGAINST FIRM UNDISTURBED NON EXPANSIVE SOIL AT DEPTH SHOWN. WHERE OTHER CONDITIONS ARE ENCOUNTERED DURING EXCAVATION THE ENGINEER SHALL BE NOTIFIED AND REMEDIAL MEASURES PRESCRIBED PRIOR TO PROCEEDING WITH WORK.
13. BOTTOM OF ALL FOOTING TRENCHES SHALL BE CLEAN AND LEVEL. REMOVE ALL DEBRIS BEFORE PLACING ANY CONCRETE.
14. ALL ANCHOR BOLTS & THREADED ROD SHALL BE ASTM F1554, GR.36 MINIMUM UNLESS OTHERWISE NOTED, NEW, & WITHOUT SIGNIFICANT RUST.
15. A ¾" CHAMFER SHALL BE PROVIDED AT ALL EXPOSED EDGES OF CONCRETE UNLESS OTHERWISE NOTED.
16. REINFORCING, DOWELS, BOLTS, ANCHORS, SLEEVES, ETC. TO BE EMBEDDED IN CONCRETE SHALL BE SECURELY POSITIONED BEFORE PLACING CONCRETE.
17. ALL CONCRETE SHALL BE THOROUGHLY CONSOLIDATED BY MOTORIZED VIBRATORY MEANS AND THOROUGHLY WORKED AROUND REINFORCEMENT, EMBEDDED ITEMS AND INTO CORNERS OF FORMS.

EXPANSION & EPOXY ANCHORS

1. EXPANSION AND EPOXY ANCHORS SHALL BE IN CONFORMANCE WITH ALL REQUIREMENTS OF THE 2022 CALIFORNIA BUILDING CODE (CBC).
2. ALL ANCHORS PROVIDED SHALL BE INCLUDED IN EVALUATION REPORTS OF THE INTERNATIONAL CODE COUNCIL (ICC), AND SHALL BE EVALUATED FOR 2021 IBC MINIMUM REQUIREMENTS IN THE ICC REPORT
3. CONCRETE EXPANSION ANCHORS SHALL BE KWIK BOLT TZ2 BY HILTI, INC., TULSA, OKLAHOMA AS PER ICC REPORT NO. ESR-4266 OR APPROVED EQUIVALENT.
4. CMU EXPANSION ANCHORS SHALL BE KWIK BOLT TZ2 BY HILTI, INC., TULSA, OKLAHOMA AS PER ICC REPORT NO. ESR-4561 OR APPROVED EQUIVALENT. ANCHORS SHALL BE INSTALLED A MINIMUM OF 1⅜" FROM ANY VERTICAL MORTAR JOINT TYPICAL. ANCHORS TO BE SPACED 8 INCHES ON CENTER MINIMUM AND LIMITED TO ONE ANCHOR PER CELL.
5. CONCRETE ADHESIVE EPOXY ANCHORS SHALL BE HIT RE-500 V3 BY HILTI, INC., TULSA, OKLAHOMA AS PER ICC REPORT NO. ESR-3814 OR APPROVED EQUIVALENT.
6. GROUT FILLED CMU ADHESIVE EPOXY ANCHORS SHALL BE HIT-HY 200 BY HILTI, INC., TULSA, OKLAHOMA AS PER ICC REPORT NO. ESR-3963 OR APPROVED EQUIVALENT.
7. INSTALL EXPANSION AND EPOXY ANCHORS WITH SPECIAL INSPECTION IN ACCORDANCE WITH THE 2022 CBC, TABLE 1705.3, AND ALL REQUIREMENTS OF THE MANUFACTURER, THE MANUFACTURER'S ICC APPROVAL AND THESE DRAWINGS.
8. EXPANSION ANCHORS SHALL BE 304/316 STAINLESS STEEL U.O.N. EPOXY ANCHOR THREADED ROD SHALL BE ASTM F593 CW1 (316) (¼" TO ⅝") OR F593 CW2 (316) (¾" TO 1½") STAINLESS STEEL U.O.N.
9. LOCATE AND AVOID REINFORCEMENT AND OTHER EMBEDDED ITEMS WHEN INSTALLING ANCHORS, TYPICAL. SEE CONCRETE CORE DRILLING NOTES FOR ADDITIONAL INFORMATION.
10. THE SPECIAL INSPECTOR MUST MAKE PERIODIC INSPECTIONS DURING ANCHOR INSTALLATION TO VERIFY ANCHOR TYPE AND DIMENSIONS, CONCRETE MEMBER THICKNESS, ANCHOR SPACING, EDGE DISTANCES, TIGHTENING TORQUE, HOLE DIAMETER, DEPTH AND CLEANLINESS, ANCHOR EMBEDMENT AND ADHERENCE TO MANUFACTURER'S INSTALLATION INSTRUCTIONS. SEE NOTE 11 BELOW FOR FREQUENCY OF INSPECTIONS.
11. 50% OF ALL ANCHORS, INCLUDING ALTERNATE BOLTS IN A GROUP OF ANCHORS, SHALL BE INSPECTED PER NOTE 10 ABOVE AND TORQUE TESTED PER THE ICC REPORT TEST VALUES NOTED BELOW:

KB TZ2:

CONCRETE TORQUE TEST VALUES:
⅜"=30 FT LB ½"=40 FT LB ⅝"=60 FT LB ¾"=125 FT LB

CMU TORQUE TEST VALUES:
⅜"=15 FT LB ½"=25 FT LB ⅝"=35 FT LB ¾"=50 FT LB

EPOXY ANCHOR:

CONCRETE TORQUE TEST VALUES:
½"=30 FT LB
(CONCRETE TENSION TEST VALUES TO BE DETERMINED AS NEEDED. A RFI WILL BE ISSUED IF NEEDED DURING CONSTRUCTION TO ESTABLISH THE REQUIRED TENSION TEST VALUES)

CONCRETE CORE/DRILLING NOTES

1. WHEN INSTALLING DRILLED-IN ANCHORS AND/OR POWDER DRIVEN PINS IN EXISTING NON-PRESTRESSED OR POST-TENSIONED REINFORCED CONCRETE (MILD REINFORCED), USE CARE & CAUTION TO AVOID CUTTING OR DAMAGING THE (E) REINFORCING BARS. WHEN INSTALLING ANCHORS INTO (E) PRE-STRESSED OR POST-TENSIONED CONCRETE LOCATE THE PRE-STRESSED OR POST-TENSIONED TENDONS BY USING A NON-DESTRUCTIVE METHOD, SUCH AS X-RAY, AT POINT OF PENETRATION, PRIOR TO INSTALLATION. EXERCISE EXTREME CARE & CAUTION TO AVOID CUTTING OR DAMAGING THE TENDONS DURING INSTALLATION. MAINTAIN A MINIMUM CLEARANCE OF TWO INCHES BETWEEN REINFORCEMENT AND THE DRILLED-IN ANCHOR AND/OR PIN.
2. WHEN CORING EXISTING REINFORCED CONCRETE OF ANY CONSTRUCTION TYPE (PRE-STRESSED, POST-TENSIONED OR MILD REINFORCED), LOCATE THE EXISTING REINFORCING BY USING A NON-DESTRUCTIVE METHOD, SUCH AS X-RAY, PRIOR TO CORING. EXERCISE EXTREME CARE & CAUTION TO AVOID CUTTING OR DAMAGING ANY REINFORCING DURING CORING. MAINTAIN A MINIMUM CLEARANCE OF TWO INCHES BETWEEN REINFORCEMENT AND THE CORE. THE MAXIMUM SIZE OF ANY CORE IS TO BE 6" DIAMETER AND THE MINIMUM SPACING BETWEEN CORES IS TO BE TWICE THE CORE DIAMETER (I.E. 12" SPACING FOR A 6" DIAMETER CORE).
3. INSPECTOR IS TO BE PRESENT DURING ALL CORE DRILLING OPERATIONS TO VERIFY THAT NO REINFORCING CABLES, TENDONS, OR REBAR HAVE BEEN CUT. (SEE NOTE 5 BELOW)
4. THE INSPECTOR SHALL SUBMIT A WRITTEN REPORT TO THE OWNER.
5. THE INSPECTIONS INDICATED IN NOTES 3 AND 4 ABOVE ARE NOT REQUIRED FOR A CONCRETE FILL OVER METAL DECK APPLICATION WHERE INDICATED ON THE CONSTRUCTION DRAWINGS.

FRAMING NOTES

1. ALL JOINTS AND PENETRATIONS SHALL BE CAULKED AND SEALED.
2. ALL 2X OR 4X FRAMING LUMBER SHALL BE DOUGLAS FIR #2 OR BTR, 6X DOUGLAS FIR # 1 OR BTR UNLESS OTHERWISE NOTED.
3. ALL EXTERIOR USE LUMBER SHALL BE PRESSURE TREATED W/ FASTENERS HDG & METAL CONNECTORS G135 OR BETTER AS REQUIRED FOR CORROSION RESISTANCE TO THE PRESERVATIVE TYPE USED.
4. ALL STRUCTURAL CONNECTORS SHALL BE AS SPECIFIED OR AN EQUIVALENT.
5. NAILING SHALL CONFORM WITH THE REQUIREMENTS OF THE 2022 CBC UNLESS OTHERWISE NOTED. DRAWING SPECIFIC CALLOUTS SUPERCEDE CODE NAILING REQUIREMENTS
6. HOLES FOR BOLTS IN WOOD SHALL BE BORED WITH A BIT OF THE SAME NOMINAL DIAMETER AS THE BOLT PLUS 1/16".
7. HOLES FOR LAG SCREWS ø⅜" OR GREATER SHALL BE BORED AS FOLLOWS:
   A. THE CLEARANCE HOLE FOR THE SHANK SHALL HAVE THE SAME DIAMETER AS THE SHANK, AND THE SAME DEPTH OF PENETRATION AS THE LENGTH OF UNTHREADED SHANK.
   B. THE LEAD HOLE FOR THE THREADED PORTION SHALL HAVE A DIAMETER EQUAL TO 75% OF THE SHANK DIAMETER AND A LENGTH EQUAL TO AT LEAST THE LENGTH OF THE THREADED PORTION.
   C. LAG SCREWS AND WOOD SCREWS SHALL BE SCREWED AND NOT DRIVEN INTO PLACE. PROVIDE LIQUID SOAP AS REQUIRED TO LUBRICATE LAG SCREWS DURING INSTALLATION.
8. LAG SCREWS SHALL BE GALVANIZED ASTM A307 MINIMUM. BOLTED CONNECTIONS SHALL BE BEARING TYPE. SEE PLANS FOR LOCATION, NUMBER, & SIZE OF BOLTS.

HVAC GENERAL NOTES

1. THE CONTRACTOR SHALL PERFORM THE WORK IN ACCORDANCE WITH THE LATEST ASHRAE AND INDUSTRIAL STANDARDS.
2. ALL HVAC WORK SHALL COMPLY WITH ALL APPLICABLE STATE AND LOCAL BUILDING CODES AND FEDERAL CODES HAVING JURISDICTION OVER THE CONSTRUCTION.
3. CONTRACTOR SHALL EXAMINE THE PROJECT SITE AND DISCUSS GENERAL REQUIREMENTS OF BUILDING AND WORK PERFORMANCE WITH THE PROJECT MANAGER. CONTRACTOR SHALL COORDINATE HIS WORK WITH THE WORK OF OTHERS ON THE PROJECT. CONTRACTOR SHALL CONFIRM EXISTING CONDITIONS AND PROVIDE ALL LABOR AND MATERIALS TO MAKE A WORKABLE AND USEABLE SYSTEM.
4. CONTRACTOR IS TO REPORT TO PROJECT MANAGER ANY OBSERVATIONS OR CONDITIONS WHICH ARE DISCOVERED IN THE BUILDING WHICH WOULD PREVENT THE FULLEST USE OF THE HVAC SYSTEM.
5. IT IS NECESSARY TO USE SEAMLESS COPPER PIPES AND IT IS DESIRABLE THAT THE AMOUNT OF RESIDUAL OIL IS LESS THAN 40 MG/10M. DO NOT USE COPPER PIPES HAVING A COLLAPSED, DEFORMED OR DISCOLORED PORTION (ESPECIALLY ON THE INTERIOR SURFACE). OTHERWISE, THE EXPANSION VALUE OR CAPILLARY TUBE MAY BECOME BLOCKED WITH CONTAMINANTS.
6. CONTRACTOR SHALL ARRANGE AND PAY FOR ALL FEES, PERMITS, AND INSPECTIONS CONCERNING THE WORK.
7. ISOLATE ALL HVAC UNITS/FANS AND EQUIPMENT FROM STRUCTURE WITH APPROVED ISOLATION MOUNTS.
8. ALL WEATHER EXPOSED EQUIPMENT, DUCTS, ETC., SHALL BE COMPLETELY WEATHERPROOFED. PROVIDE LEAD FLASHINGS FOR PIPE PENETRATIONS THROUGH ROOF. PATCH ROOFING AT CURBS AND PENETRATIONS.
9. SEER RATING AND HEATING COMBUSTION EFFICIENCY RATING OF EACH HVAC UNIT SHALL COMPLY WITH STATE REQUIREMENTS.
10. INSTALL CONDENSATE DRAIN LINES AWAY FROM ALL ELECTRICAL, RADIO, AND TELEPHONE EQUIPMENT.
12. WHEN CHARGING THE REFRIGERANT, TAKE INTO ACCOUNT THE SLIGHT CHANGE IN THE COMPOSITION OF THE GAS AND LIQUID PHASES, AND ALWAYS CHARGE FROM THE LIQUID PHASE SIDE WHOSE COMPOSITION IS STABLE.
13. ALL HVAC EQUIPMENT SHALL BE SEISMICALLY BRACED PER LOCAL REQUIREMENTS.

APPROVED
EL DORADO COUNTY
PLANNING COMMISSION
DATE: May 14, 2026
EXECUTIVE SECRETARY: Karen L. Garner

Issued For:

PLACERVILLE SHERIFF

3170 GOLD NUGGET WY,
PLACERVILLE, CA 95667

PREPARED FOR

verizon

2770 SHADELANDS DR, BLDG 11
WALNUT CREEK, CA 94598

Vendor:

EPIC WIRELESS GROUP LLC
Connecting a Wireless World

MDG LOCATION ID:	5000940687
PROJECT ID:	17120113
DRAWN BY:	C. COLSTON
CHECKED BY:	S. SAVIG
APPROVED BY:	J. SPORE

ISSUE STATUS

REV	DATE	DESCRIPTION	CAD
5	05/13/26	CLIENT REV	C.C.
4	02/25/26	PLANNING COMMS	T.T.
3	12/18/25	PLANNING COMMS	S.V.
4	09/30/25	CLIENT REV	S.V.
3	09/25/25	CLIENT REV	T.T.
2	02/12/24	CD 100%	S.D.
1	02/06/24	CLIENT REV	S.D.
0	01/11/24	CD 90%	C.T.C

Licensee:

REGISTERED PROFESSIONAL ENGINEER
JAMES R. SPORE
S6336
STRUCTURAL
STATE OF CALIFORNIA

IT IS A VIOLATION OF LAW FOR ANY PERSON, UNLESS THEY ARE ACTING UNDER THE DIRECTION OF A LICENSED PROFESSIONAL ENGINEER, TO ALTER THIS DOCUMENT.

ENGINEER:

Streamline Engineering and Design, Inc.
3643 Taylor Road, Suite A, Loomis, CA 95650
Contact: Kevin Brown Phone: 916-660-1930
E-Mail: kevin@streamlineeng.com Fax: 916-660-1941

THESE PLANS AND SPECIFICATIONS, AS INSTRUMENTS OF SERVICE, ARE AND SHALL REMAIN THE PROPERTY OF STREAMLINE ENGINEERING AND DESIGN, INC. WHEN THE PROJECT FOR WHICH THEY WERE PREPARED IS COMPLETED, THEY ARE NOT TO BE USED ON OTHER PROJECTS OR EXTENSIONS OF THIS PROJECT EXCEPT BY AGREEMENT IN WRITING AND APPROPRIATE COMPENSATION FOR THEIR USE HAS BEEN MADE TO THE ENGINEER. Copyright © 2016, STREAMLINE ENGINEERING AND DESIGN INC. ALL RIGHTS RESERVED

SHEET TITLE:

GENERAL NOTES

SHEET NUMBER:

T-1.2

SIGNAGE AND STRIPING INFORMATION

1. THE FOLLOWING INFORMATION IS A GUIDELINE WITH RESPECT TO PREVAILING STANDARDS LIMITING HUMAN EXPOSURE TO RADIO FREQUENCY ENERGY AND SHOULD BE USED AS SUCH. IF THE SITE'S EMF REPORT OR ANY LOCAL, STATE OR FEDERAL GUIDELINES OR REGULATION SHOULD BE IN CONFLICT WITH ANY PART OF THESE NOTES OR PLANS, THE MORE RESTRICTIVE GUIDELINE OR REGULATION SHALL BE FOLLOWED AND OVERRIDE THE LESSER.
2. THE PUBLIC LIMIT OF RF EXPOSURE ALLOWED BY VERIZON WIRELESS IS $1mWcm^2$ AND THE OCCUPATIONAL LIMIT OF RF EXPOSURE ALLOWED BY VERIZON WIRELESS IS $5mWcm^2$
3. IF THE BOTTOM OF THE ANTENNA IS MOUNTED (8) EIGHT FEET ABOVE THE GROUND OR ROOF LINE OF THE PERSONAL COMMUNICATION SYSTEM (PCS) AND DOES NOT EXCEED THE PUBLIC LIMIT OF RF EXPOSURE LIMIT THEN NO STRIPING OR BARRICADES SHOULD BE NEEDED.
4. IF THE PUBLIC LIMIT OF RF EXPOSURE ON THE SITE IS EXCEEDED AND THE AREA IS PUBLICLY ACCESSIBLE (e.g. ROOF ACCESS DOOR CANNOT BE LOCKED OR THERE IS AN EXISTING FIRE EGRESS), THEN BOTH BARRICADES AND STRIPING WILL BE NEEDED AROUND THE ANTENNAS. THE EXACT EXTENT OF THE BARRICADES AND STRIPING WILL BE DETERMINED BY THE EMF REPORT FOR THE SITE DONE BEFORE OR SHORTLY AFTER THE CONSTRUCTION OF THE SITE. USE THE PLANS AS A GUIDELINE FOR PLACEMENT OF SUCH BARRICADES AND STRIPING.
5. IF THE PUBLIC LIMIT OF RF EXPOSURE ON THE SITE IS NOT EXCEEDED AND THE AREA IS NOT PUBLICLY ACCESSIBLE (e.g. ROOF ACCESS DOOR IS LOCKED), THEN JUST STRIPING OUT TO THE PUBLIC LIMIT WILL BE NEEDED AROUND THE ANTENNAS. THE EXACT EXTENT OF THE STRIPING WILL BE DETERMINED BY THE EMF REPORT FOR THE SITE DONE BEFORE OR SHORTLY AFTER THE CONSTRUCTION OF THE SITE. USE THE PLANS AS A GUIDELINE FOR PLACEMENT OF SUCH STRIPING.
6. ALL TRANSMIT ANTENNAS REQUIRE A (3) THREE LANGUAGE WARNING SIGN WRITTEN IN ENGLISH, SPANISH, AND CHINESE. THIS SIGN WILL BE PROVIDED TO THE CONTRACTOR BY THE VERIZON WIRELESS CONSTRUCTION MANAGER AT THE TIME OF CONSTRUCTION. THE LARGER SIGN SHALL BE PLACED AT ALL ROOF ACCESS LOCATIONS AND ON ALL BARRICADES IN PLAIN SIGHT AND THE SMALLER SIGN SHALL BE PLACED ON THE ANTENNAS THEMSELVES OR ON THE OUTSIDE OF THE ANTENNA ENCLOSURES IN A MANNER THAT IS EASILY SEEN BY ANY PERSON ON THE ROOF. WARNING SIGNS SHALL COMPLY WITH ANSI C95.2 COLOR, SYMBOL, AND CONTENT CONVENTIONS. ALL SIGNS WILL HAVE VERIZON WIRELESS'S NAME AND THE COMPANY CONTACT INFORMATION (e.g. TELEPHONE NUMBER) TO ARRANGE FOR ACCESS TO THE RESTRICTED AREAS. THIS TELEPHONE NUMBER WILL BE PROVIDED TO THE CONTRACTOR BY THE VERIZON WIRELESS CONSTRUCTION PROJECT MANAGER AT THE TIME OF CONSTRUCTION.
7. PHOTOS OF ALL STRIPING, BARRICADES, AND SIGNAGE WILL BE PART OF THE CONTRACTORS CLOSE OUT PACKAGE AND WILL BE TURNED INTO THE VERIZON WIRELESS CONSTRUCTION PROJECT MANAGER AT THE END OF CONSTRUCTION. STRIPING SHALL BE DONE WITH FADE RESISTANT YELLOW SAFETY PAINT IN A CROSS HATCH PATTERN. ALL BARRICADES SHALL BE MADE OF AN RF FRIENDLY MATERIAL SO THAT THEY DO NOT BLOCK OR INTERFERE WITH THE OPERATION OF THE SITE AND SHALL BE PAINTED WITH FADE RESISTANT YELLOW SAFETY PAINT. THE CONTRACTOR SHALL PROVIDE ALL RF FRIENDLY BARRICADES NEEDED AND SHALL PROVIDE THE VERIZON WIRELESS CONSTRUCTION PROJECT MANAGER WITH A DETAILED SHOP DRAWING OF EACH BARRICADE.
8. ALL REQUIRED SIGNAGE WILL BE INSTALLED AS NEEDED AND FIELD VERIFIED.

1 TYPICAL ADDRESS SIGN DETAIL (@ LEASE AREA ACCESS DOOR)

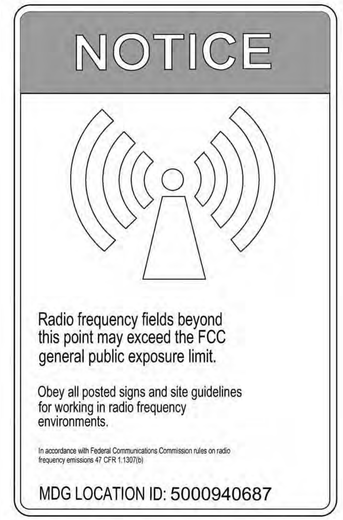

2 TYPICAL CAUTION SIGN

NOTE: SIGN TO BE PERMANENTLY MOUNTED AT ANTENNA LOCATIONS.

3 TYPICAL HAZARD SIGN

4 TYPICAL HAZARD SIGN

APPROVED
EL DORADO COUNTY
PLANNING COMMISSION
DATE: May 14, 2026
EXECUTIVE SECRETARY: Karen L. Garner

Issued For:

PLACERVILLE SHERIFF

3170 GOLD NUGGET WY, PLACERVILLE, CA 95667

PREPARED FOR

verizon

2770 SHADELANDS DR, BLDG 11
WALNUT CREEK, CA 94598

Vendor:

EPIC WIRELESS GROUP LLC
Connecting a Wireless World

MDG LOCATION ID:	5000940687
PROJECT ID:	17120113
DRAWN BY:	C. COLSTON
CHECKED BY:	S. SAVIG
APPROVED BY:	J. SPORE

ISSUE STATUS

REV	DATE	DESCRIPTION	CAD
5	05/13/26	CLIENT REV	C.C.
3	02/25/26	PLANNING COMMS	T.T.
1	12/18/25	PLANNING COMMS	S.V.
4	09/30/25	CLIENT REV	S.V.
3	09/25/25	CLIENT REV	T.T.
2	02/12/24	CD 100%	S.D.
1	02/06/24	CLIENT REV	S.D.
0	01/11/24	CD 90%	C.T.C

Licensee:

REGISTERED PROFESSIONAL ENGINEER JAMES R. SPORE S6336 STRUCTURAL STATE OF CALIFORNIA

IT IS A VIOLATION OF LAW FOR ANY PERSON, UNLESS THEY ARE ACTING UNDER THE DIRECTION OF A LICENSED PROFESSIONAL ENGINEER, TO ALTER THIS DOCUMENT.

ENGINEER:

Streamline Engineering and Design, Inc.
3848 Taylor Road, Suite A, Loomis, CA 95650
Contact: Kevin Scrivener Phone: 916-660-1930
E-Mail: kevin@streamlineeng.com Fax: 916-660-1941

THESE PLANS AND SPECIFICATIONS AND INSTRUMENTS OF SERVICE, AND SHALL REMAIN THE PROPERTY OF STREAMLINE ENGINEERING AND DESIGN INC. WHETHER THE PROJECT FOR WHICH THEY ARE MADE IS EXECUTED OR NOT. THESE DRAWINGS AND SPECIFICATIONS SHALL NOT BE USED BY ANYONE ON OTHER PROJECTS, EXCEPT BY AGREEMENT IN WRITING AND WITH APPROPRIATE COMPENSATION TO STREAMLINE ENGINEERING. Copyright © 2005, STREAMLINE ENGINEERING AND DESIGN INC. ALL RIGHTS RESERVED.

SHEET TITLE:

SIGNAGE DETAILS

SHEET NUMBER:

T-1.3

Geil Engineering
Engineering * Surveying * Planning
1226 High Street
Auburn, California 95603–5015
Phone: (530) 885–0426 * Fax: (530) 823–1309

Verizon Wireless

Project Name: Placerville Sheriff

Project Site Location: 3170 Gold Nugget Way
Placerville, CA 95667
El Dorado County

Date of Observation: 11–01–23

Equipment/Procedure Used to Obtain Coordinates: Trimble Pathfinder Pro XL post processed with Pathfinder Office software.

Type of Antenna Mount: Proposed Monopine

Coordinates (Tower)(NAD83)
Latitude: N 38° 43' 35.45" N 38.726513°
Longitude: W 120° 49' 14.00" W 120.820557°

ELEVATION of Ground at Structure (NAVD88) 2038.2' AMSL

CERTIFICATION: I, the undersigned, do hereby certify elevation listed above is based on a field survey done under my supervision and that the accuracy of those elevations meet or exceed 1–A Standards as defined in the FAA ASAC Information Sheet 91:003, and that they are true and accurate to the best of my knowledge and belief.

Kenneth D. Geil California RCE 14803

Lease Area Description

All that certain lease area being a portion of that certain parcel of land as described in that certain document filed in Book 1810 of Deeds, Page 164 Official Records of El Dorado County, California, also being a portion of the East half of the Northeast quarter Section 13, Township 10 North, Range 10 East M.D.B.M., being more particularly described as follows:

Commencing at a 1–1/4" C.I.P. set for the most Northerly corner of Parcel 1 as is shown on that certain Parcel Map filed for record at Book 27 of Parcel Maps at Page 44, Official Records of El Dorado County, from which a 3/4" C.I.P. set at the most Westerly corner of the above referenced Parcel 1 bears South 27°43'59" West 457.18 feet; thence from said Point of Commencement South 73°05'01" West 389.42 feet to the True Point of Beginning; thence from said point of beginning South 77°25'29" West 30.00 feet; thence North 12°34'31" West 30.00 feet; thence North 77°25'29" East 30.00 feet; thence South 12°34'31" East 30.00 feet to the point of beginning.

Together with a non–exclusive easement for ingress and egress sixteen feet in width the centerline of which is described as follows: beginning at a point which bears South 77°25'29" West 8.00 feet from the most Easterly corner of the above described lease area and running thence South 12°34'31" East 9.06 feet to a point hereafter defined as Point "A"; thence North 77°44'01" East 13.95 feet; thence South 86°19'18" East 101.05 feet; thence along a non–tangent curve to the left having a central radius of 325.00 feet, the chord of which bears North 79°27'57" East 190.53 feet; thence North 63°07'16" East 67.62 feet; thence North 40°54'29" East 63.0 feet more or less to the public right of way.

Also together with a non–exclusive easement for ingress and egress sixteen feet in width the centerline of which is described as follows: beginning at Point "A" as previously defined and running thence South 77°44'01" West 21.80 feet.

THESE DRAWINGS AND/OR THE ACCOMPANYING SPECIFICATION AS INSTRUMENTS OF SERVICE, ARE THE EXCLUSIVE PROPERTY OF GEIL ENGINEERING AND THEIR USE AND PUBLICATION SHALL BE RESTRICTED TO THE ORIGINAL SITE AND CARRIER FOR WHICH THEY ARE PREPARED. REUSE, REPRODUCTION OR PUBLICATION BY ANY METHOD, IN WHOLE OR IN PART, IS PROHIBITED EXCEPT BY WRITTEN PERMISSION FROM GEIL ENGINEERING TITLE TO THESE PLANS AND/OR SPECIFICATIONS SHALL REMAIN WITH GEIL ENGINEERING WITHOUT PREJUDICE AND VISUAL CONTACT WITH THEM SHALL CONSTITUTE PRIMA FACIE EVIDENCE OF ACCEPTANCE OF THESE RESTRICTIONS.

BOUNDARY SHOWN IS BASED ON MONUMENTATION FOUND AND RECORD INFORMATION. THIS IS NOT A BOUNDARY SURVEY. THIS IS A SPECIALIZED TOPOGRAPHIC MAP WITH PROPERTY LINES AND EASEMENTS BEING A GRAPHIC DEPICTION BASED ON INFORMATION GATHERED FROM VARIOUS SOURCES OF RECORD AND AVAILABLE MONUMENTATION FOUND DURING THE FIELD SURVEY. PROPERTY LINES AND LINES OF TITLE WERE NOT INVESTIGATED NOR SURVEYED EXCEPT AS SHOWN ON THIS PLAN. NO PROPERTY MONUMENTS WERE SET.

DATE OF SURVEY: 11–01–23

SURVEYED BY OR UNDER DIRECTION OF: KENNETH D. GEIL, R.C.E. 14803

LOCATED IN THE COUNTY OF EL DORADO, STATE OF CALIFORNIA

BEARINGS SHOWN ARE BASED UPON MONUMENTS FOUND AND RECORD INFORMATION. THIS IS NOT A BOUNDARY SURVEY.

ELEVATIONS SHOWN ON THIS PLAN ARE BASED UPON U.S.G.S. N.A.V.D. 88 DATUM. ABOVE MEAN SEA LEVEL.

N.G.V.D. 1929 CORRECTION: SUBTRACT XXX' FROM ELEVATIONS SHOWN.

CONTOUR INTERVAL: N/A

CONTRACTOR IS RESPONSIBLE TO VERIFY LEASE AREA PRIOR TO CONSTRUCTION.

ASSESSOR'S PARCEL NUMBER: 325–290–006–000

OWNER(S): EILEEN E. MC CALLUM
3170 GOLD NUGGET WAY
PLACERVILLE, CA 95667

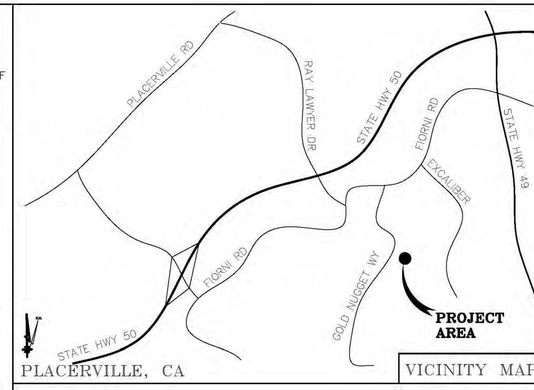

VICINITY MAP

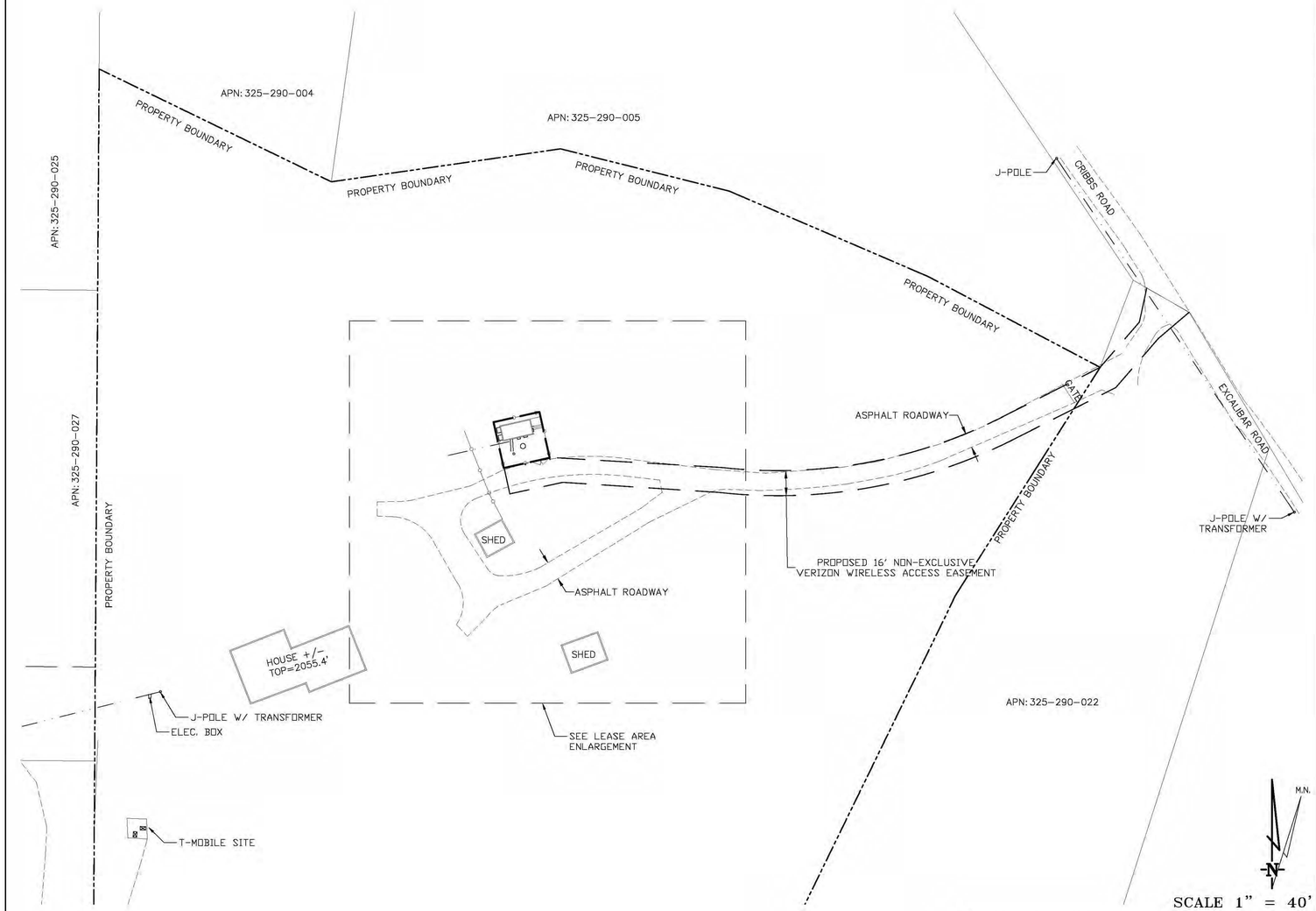

PROJECT AREA ENLARGEMENT

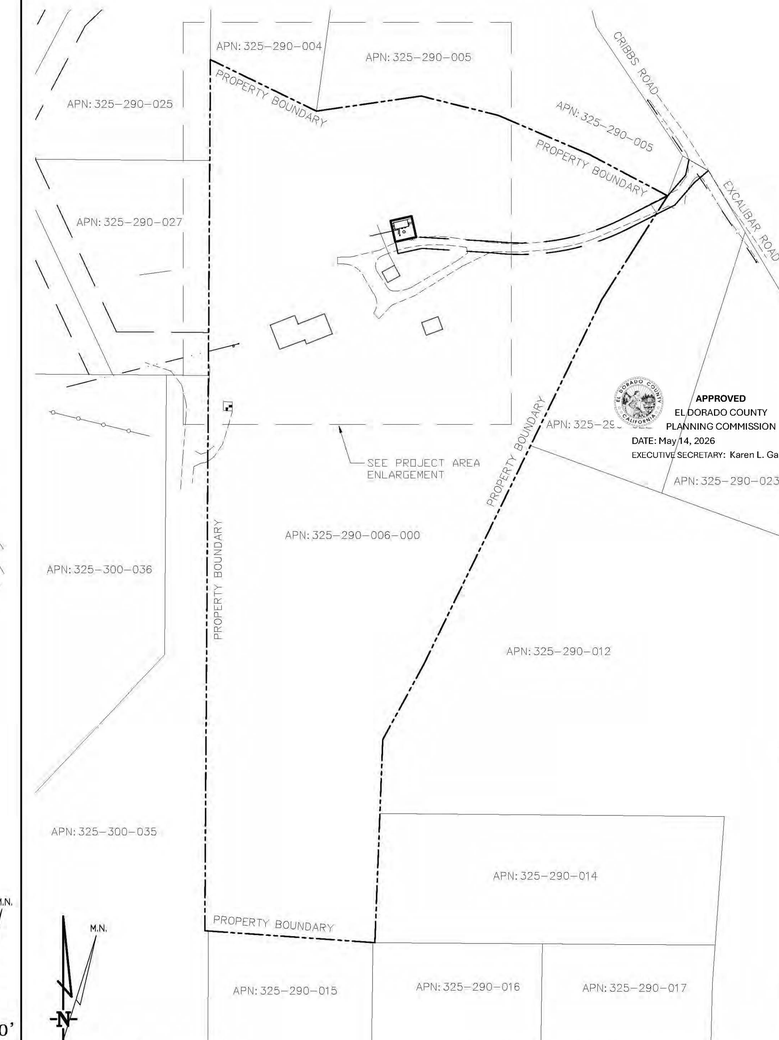

APPROVED
EL DORADO COUNTY
PLANNING COMMISSION
DATE: May 14, 2026
EXECUTIVE SECRETARY: Karen L. Garner

OVERALL PROJECT AREA

DEPT	APPROVED	DATE
A&C		
RE		
RF		
INT		
EE\IN		
OPS		
EE\OUT		

Surveyor
GEIL ENGINEERING
ENGINEERING * SURVEYING * PLANNING
1226 HIGH STREET
AUBURN, CALIFORNIA 95603
Phone: (530) 885–0426
Fax: (530) 823–1309

verizon

PLACERVILLE SHERIFF RELO
3170 GOLD NUGGET WAY
PLACERVILLE, CA 95667

PLOT PLAN AND
SITE TOPOGRAPHY

REVISIONS		
REV	11–02–23	DRAWING SUBMITTAL
REV	NR	
REV	12–08–23	DESCRIPTION ADDED
REV	NR	
REV	05–13–26	TOWER MOD.
REV	NR	
REV		
REV		
REV		
REV		
REV		
REV		

Sheet
C–1

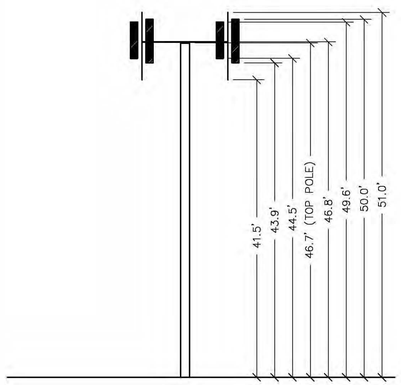

POLE DIAGRAM

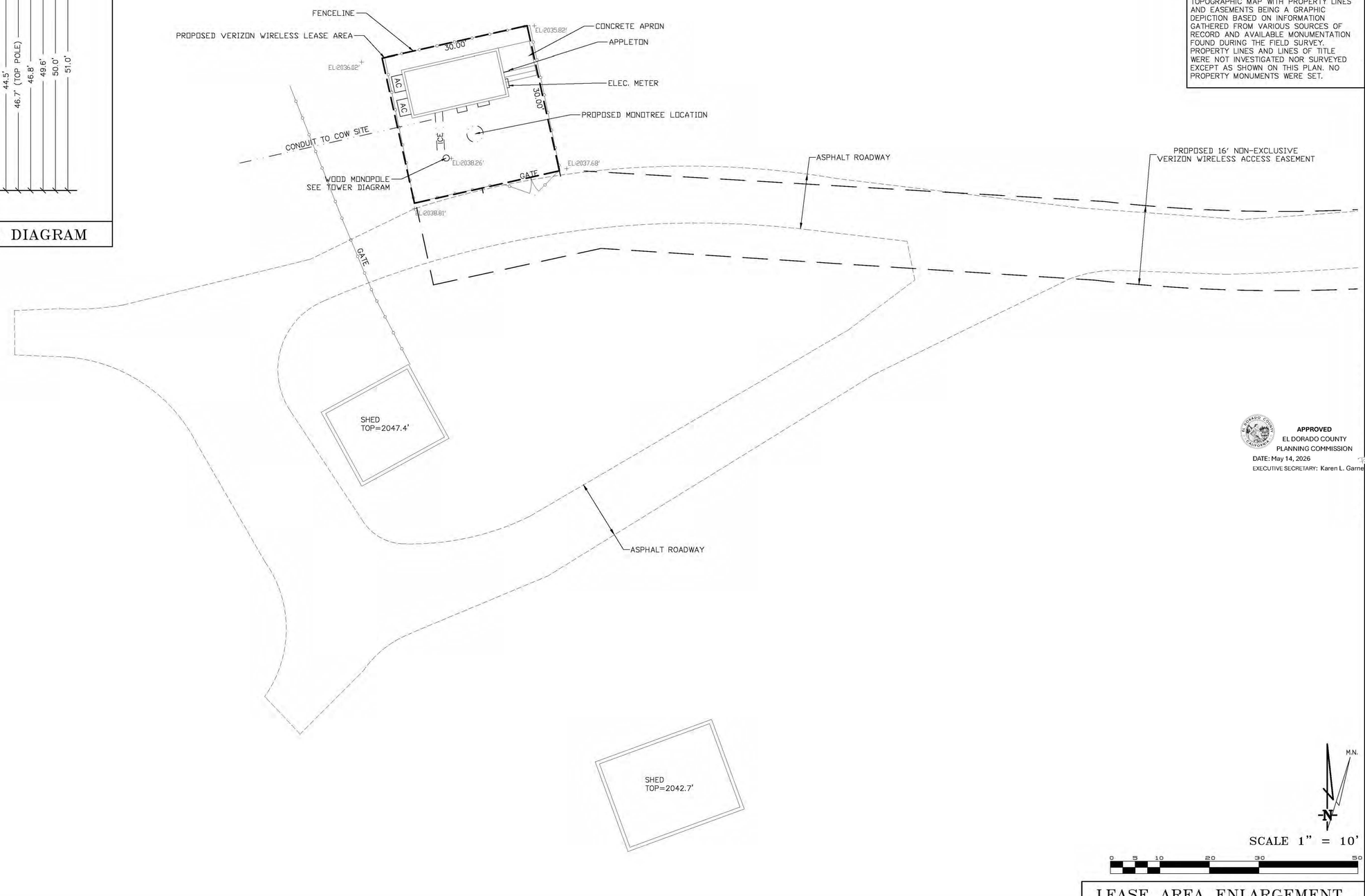

SCALE 1" = 10'

LEASE AREA ENLARGEMENT

THESE DRAWINGS AND/OR THE ACCOMPANYING SPECIFICATION AS INSTRUMENTS OF SERVICE, ARE THE EXCLUSIVE PROPERTY OF GEIL ENGINEERING AND THEIR USE AND PUBLICATION SHALL BE RESTRICTED TO THE ORIGINAL SITE AND CARRIER FOR WHICH THEY ARE PREPARED. REUSE, REPRODUCTION OR PUBLICATION BY ANY METHOD, IN WHOLE OR IN PART, IS PROHIBITED EXCEPT BY WRITTEN PERMISSION FROM GEIL ENGINEERING TITLE TO THESE PLANS AND/OR SPECIFICATIONS SHALL REMAIN WITH GEIL ENGINEERING WITHOUT PREJUDICE AND VISUAL CONTACT WITH THEM SHALL CONSTITUTE PRIMA FACIE EVIDENCE OF ACCEPTANCE OF THESE RESTRICTIONS.

BOUNDARY SHOWN IS BASED ON MONUMENTATION FOUND AND RECORD INFORMATION. THIS IS NOT A BOUNDARY SURVEY. THIS IS A SPECIALIZED TOPOGRAPHIC MAP WITH PROPERTY LINES AND EASEMENTS BEING A GRAPHIC DEPICTION BASED ON INFORMATION GATHERED FROM VARIOUS SOURCES OF RECORD AND AVAILABLE MONUMENTATION FOUND DURING THE FIELD SURVEY. PROPERTY LINES AND LINES OF TITLE WERE NOT INVESTIGATED NOR SURVEYED EXCEPT AS SHOWN ON THIS PLAN. NO PROPERTY MONUMENTS WERE SET.

DEPT	APPROVED	DATE
A&C		
RE		
RF		
INT		
EE\IN		
OPS		
EE\OUT		

APPROVED
EL DORADO COUNTY
PLANNING COMMISSION
DATE: May 14, 2026
EXECUTIVE SECRETARY: Karen L. Garner

Surveyor
GEIL ENGINEERING
ENGINEERING • SURVEYING • PLANNING
1228 HIGH STREET
AUBURN, CALIFORNIA 95603
phone: (530) 885-0428
fax: (530) 823-1309

verizon

PLACERVILLE SHERIFF RELOCATION
3170 GOLD NUGGET WAY
PLACERVILLE, CA 95667

PLOT PLAN AND
SITE TOPOGRAPHY

Sheet
C-2

EL DORADO COUNTY FIRE COMMENTS:

1. FIRE APPARATUS ACCESS – APPROVED FIRE APPARATUS ACCESS SHALL REMAIN UNOBSTRUCTED AT ALL TIMES. ALL APPROVED GATES SHALL BE EQUIPPED WITH FIRE DEPARTMENT –APPROVED EMERGENCY ACCESS (KNOX PADLOCK, OR OTHER FIRE DEPARTMENT REQUIRED DEVICES IF AUTOMATED).

2. PREMISES IDENTIFICATION – APPROVED ADDRESS IDENTIFICATION AND ON–SITE DIRECTIONAL SIGNAGE SHALL BE INSTALLED AND MAINTAINED IN ACCORDANCE WITH FIRE DEPARTMENT STANDARDS PRIOR TO OCCUPANCY.

3. EMERGENCY CONTACT SIGNAGE – PERMANENT EMERGENCY CONTACT SIGNAGE SHALL BE INSTALLED AT THE PRIMARY SITE ENTRANCE AND AT ANY ADDITIONAL LOCATIONS AS REQUIRED BY THE FIRE DEPARTMENT. AT A MINIMUM, THE SIGNAGE SHALL INCLUDE THE SITE NAME, PHYSICAL ADDRESS, AND A 24–HOUR EMERGENCY CONTACT NAME AND PHONE NUMBER. SIGNAGE SHALL BE APPROVED BY THE FIRE DEPARTMENT AND INSTALLED PRIOR TO COMMENCEMENT OF OPERATIONS.

4. VEGETATION MANAGEMENT / DEFENSIBLE SPACE – DEFENSIBLE SPACE AND VEGETATION MANAGEMENT SHALL BE ESTABLISHED AND CONTINUOUSLY MAINTAINED IN COMPLIANCE WITH APPLICABLE STATE AND LOCAL FIRE REGULATIONS. FAILURE TO MAINTAIN DEFENSIBLE SPACE SHALL CONSTITUTE A VIOLATION OF THE CONDITIONAL USE PERMIT

5. FIRE PROTECTION SYSTEMS – FIRE SPRINKLER SYSTEMS, FIRE ALARM SYSTEMS, AND OTHER REQUIRED FIRE PROTECTION FEATURES SHALL BE PROVIDED AS DETERMINED DURING BUILDING PERMIT REVIEW BASED ON FINAL BUILDING SIZE, USE, AND CONSTRUCTION TYPE. ALL REQUIRED SYSTEMS SHALL BE INSTALLED, TESTED, AND APPROVED PRIOR TO OCCUPANCY.

6. DIESEL GENERATOR AND FUEL STORAGE – ANY DIESEL–POWERED GENERATOR ASSOCIATED WITH THE PROJECT SHALL COMPLY WITH APPLICABLE FIRE CODE REQUIREMENTS FOR COMBUSTIBLE LIQUIDS. FUEL TANKS, PIPING, DAY TANKS, AND OVERFLOW OR SECONDARY SPILL CONTAINMENT SYSTEMS SHALL BE REVIEWED AND APPROVED BY THE FIRE DEPARTMENT AND SHALL BE SUBJECT TO FINAL INSPECTION AND APPROVAL BY THE FIRE DEPARTMENT PRIOR TO OPERATION.

7. HAZARDOUS MATERIALS – THE STORAGE, USE, OR HANDLING OF COMBUSTIBLE OR HAZARDOUS MATERIALS SHALL COMPLY WITH FIRE CODE REQUIREMENTS. ADDITIONAL PERMITS OR OPERATIONAL RESTRICTIONS MAY BE REQUIRED BY THE FIRE DEPARTMENT.

8. FIRE LANES AND PARKING RESTRICTIONS – FIRE APPARATUS ACCESS ROADS AND FIRE LANES SHALL BE MAINTAINED CLEAR AND UNOBSTRUCTED AT ALL TIMES. FIRE LANE MARKING AND SIGNAGE SHALL BE INSTALLED WHERE REQUIRED BY THE FIRE DEPARTMENT PRIOR TO OCCUPANCY.

9. ENFORCEMENT – FAILURE TO COMPLY WITH FIRE DEPARTMENT CONDITIONS SHALL CONSTITUTE A VIOLATION OF THE CONDITIONAL USE PERMIT AND MAY RESULT IN ENFORCEMENT ACTION, SUSPENSION, OR REVOCATION OF THE PERMIT.

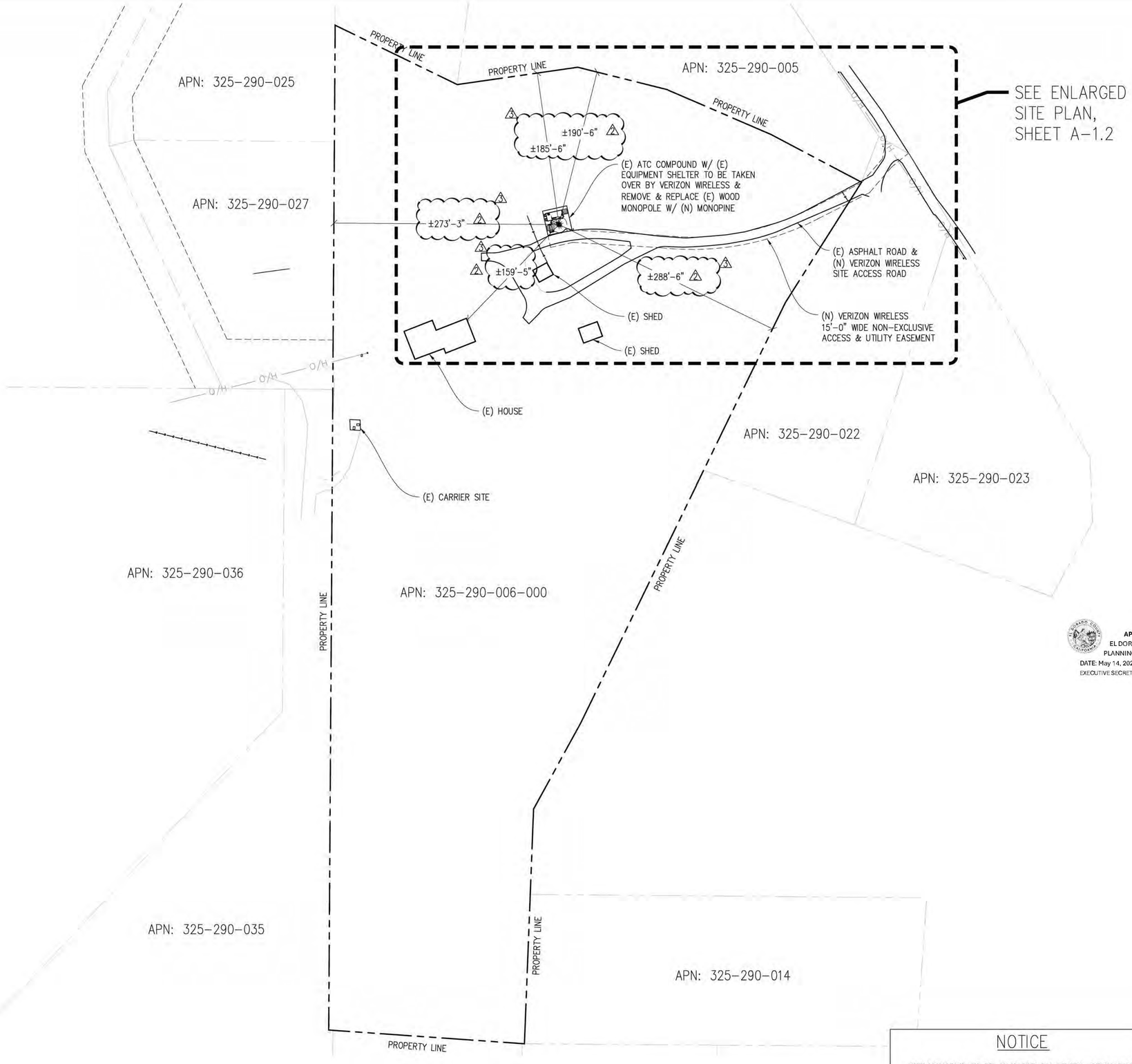

APPROVED
EL DORADO COUNTY
PLANNING COMMISSION
DATE: May 14, 2026
EXECUTIVE SECRETARY: Karen L. Garner

OVERALL SITE PLAN

1"=60'-0"

0 15' 30' 60' 120' 180' 360'

NOTICE

NEW MONOPINE TO BE ANALYZED BY OTHERS. STREAMLINE ENGINEERING & DESIGN INC. IS NOT RESPONSIBLE FOR THE EVALUATION OF THE NEW MONOPINE, BASE PLATE, ANCHOR BOLTS, FOUNDATION OR ANTENNA/RRU MOUNT FRAMING & CONNECTIONS FOR NEW LOADING CONDITIONS.

Issued For:

PLACERVILLE SHERIFF

3170 GOLD NUGGET WY,
PLACERVILLE, CA 95667

PREPARED FOR

verizon

2770 SHADELANDS DR, BLDG 11
WALNUT CREEK, CA 94598

Vendor:

EPIC WIRELESS GROUP LLC
Connecting a Wireless World

MDG LOCATION ID:	5000940687
PROJECT ID:	17120113
DRAWN BY:	C. COLSTON
CHECKED BY:	S. SAVIG
APPROVED BY:	J. SPORE

ISSUE STATUS

REV	DATE	DESCRIPTION	CAD
5	05/13/26	CLIENT REV	C.C.
4	02/25/26	PLANNING COMMS	T.T.
3	12/18/25	PLANNING COMMS	S.V.
4	09/30/25	CLIENT REV	S.V.
3	09/25/25	CLIENT REV	T.T.
2	02/12/24	CD 100%	S.D.
1	02/06/24	CLIENT REV	S.D.
0	01/11/24	CD 90%	C.T.C

Licensee:

REGISTERED PROFESSIONAL ENGINEER JAMES R. SPORE S6336 STRUCTURAL STATE OF CALIFORNIA

IT IS A VIOLATION OF LAW FOR ANY PERSON, UNLESS THEY ARE ACTING UNDER THE DIRECTION OF A LICENSED PROFESSIONAL ENGINEER, TO ALTER THIS DOCUMENT.

ENGINEER:

Streamline Engineering and Design, Inc.
3643 Taylor Road, Suite A, Loomis CA 95650
Contact: Kevin Stroman Phone: 916-660-1930
E-Mail: kevin@streamlineeng.com Fax: 916-660-1941

THESE PLANS AND SPECIFICATIONS, AS INSTRUMENTS OF SERVICE, ARE AND SHALL REMAIN THE PROPERTY OF STREAMLINE ENGINEERING AND DESIGN INC. WHEN THE PROJECT FOR WHICH THEY WERE MADE IS COMPLETED, THE PLANS, DRAWINGS, AND SPECIFICATIONS SHALL NOT BE USED BY ANYONE FOR OTHER PROJECTS, OR FOR ADDITIONS TO THIS PROJECT, BY OTHERS WITHOUT THE WRITTEN CONSENT OF STREAMLINE ENGINEERING AND DESIGN INC. ALL RIGHTS RESERVED.
Copyright © 2026, STREAMLINE ENGINEERING AND DESIGN INC.

SHEET TITLE:

OVERALL SITE PLAN

SHEET NUMBER:

A-1.1

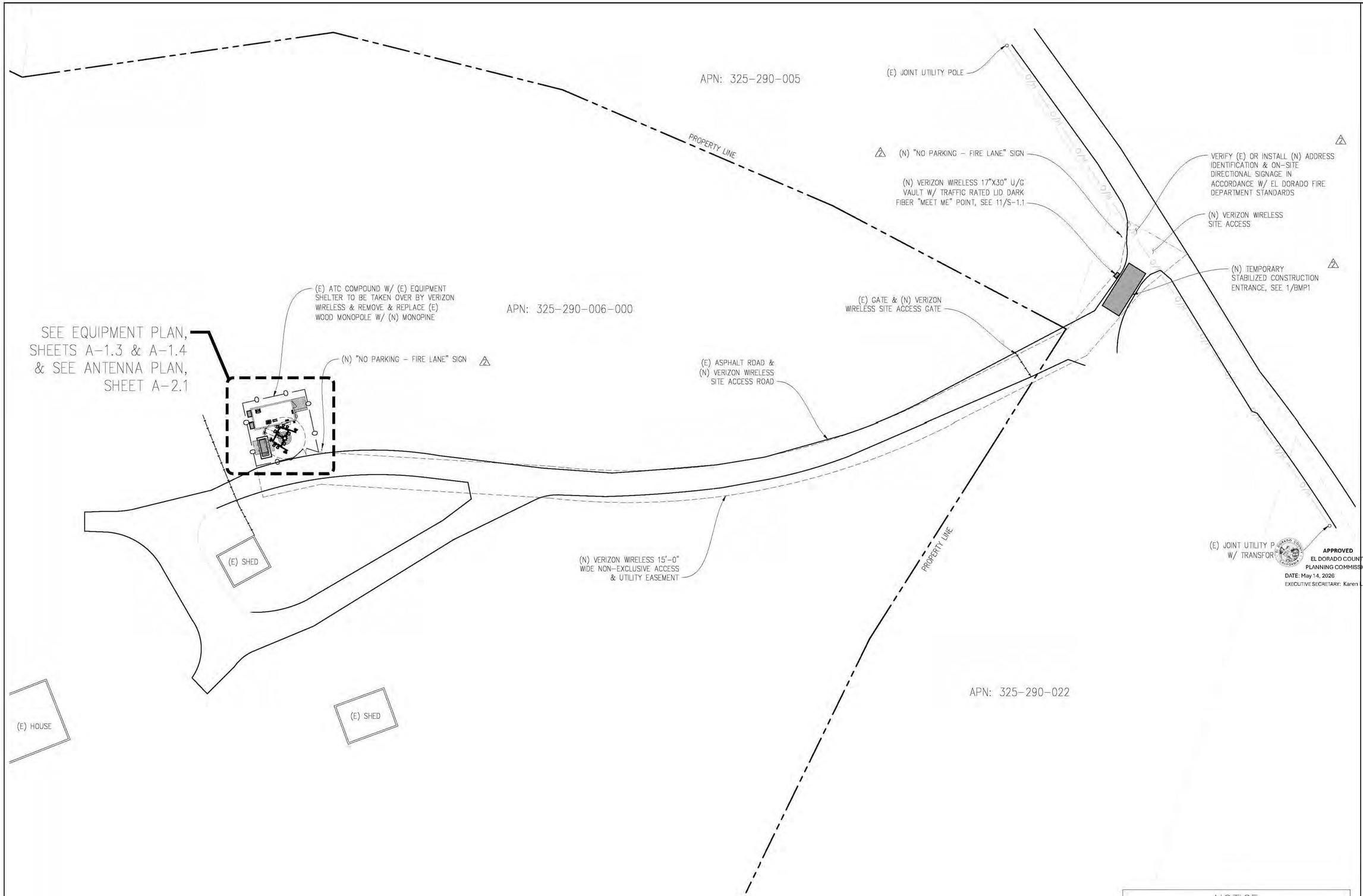

ENLARGED SITE PLAN

1"=20'-0"

0 10' 20' 40' 60' 100'

NOTICE

NEW MONOPINE TO BE ANALYZED BY OTHERS. STREAMLINE ENGINEERING & DESIGN INC. IS NOT RESPONSIBLE FOR THE EVALUATION OF THE NEW MONOPINE, BASE PLATE, ANCHOR BOLTS, FOUNDATION OR ANTENNA/RRU MOUNT FRAMING & CONNECTIONS FOR NEW LOADING CONDITIONS.

Issued For:

PLACERVILLE SHERIFF

3170 GOLD NUGGET WY, PLACERVILLE, CA 95667

PREPARED FOR

verizon

2770 SHADELANDS DR, BLDG 11
WALNUT CREEK, CA 94598

Vendor:

EPIC WIRELESS GROUP LLC
Connecting a Wireless World

MDG LOCATION ID:	5000940687
PROJECT ID:	17120113
DRAWN BY:	C. COLSTON
CHECKED BY:	S. SAVIG
APPROVED BY:	J. SPORE

ISSUE STATUS

REV	DATE	DESCRIPTION	CAD
5	05/13/26	CLIENT REV	C.C.
2	02/25/26	PLANNING COMMI	T.T.
1	12/18/25	PLANNING COMMI	S.V.
4	09/30/25	CLIENT REV	S.V.
3	09/25/25	CLIENT REV	T.T.
2	02/12/24	CD 100%	S.D.
1	02/06/24	CLIENT REV	S.D.
0	01/11/24	CD 90%	C.T.C

Licensee:

REGISTERED PROFESSIONAL ENGINEER JAMES R. SPORE S6336 STRUCTURAL STATE OF CALIFORNIA

IT IS A VIOLATION OF LAW FOR ANY PERSON, UNLESS THEY ARE ACTING UNDER THE DIRECTION OF A LICENSED PROFESSIONAL ENGINEER, TO ALTER THIS DOCUMENT.

ENGINEER:

Streamline Engineering and Design, Inc.
3843 Taylor Road, Suite A, Loomis, CA 95650
Contact: Kevin Savage Phone: 916-660-1930
E-Mail: kevin@streamlineeng.com Fax: 916-660-1941

THESE PLANS AND SPECIFICATIONS, AS INSTRUMENTS OF SERVICE, ARE AND SHALL REMAIN THE PROPERTY OF STREAMLINE ENGINEERING AND DESIGN INC. WHETHER THE PROJECT FOR WHICH THEY ARE MADE IS EXECUTED OR NOT. THESE DRAWINGS AND SPECIFICATIONS SHALL NOT BE USED BY ANY PERSON OR ENTITY FOR ANY PURPOSE OTHER THAN THE PROJECT SPECIFIED BY STREAMLINE ENGINEER. Copyright © 2005, STREAMLINE ENGINEERING AND DESIGN INC. ALL RIGHTS RESERVED.

SHEET TITLE:

ENLARGED SITE PLAN

SHEET NUMBER:

A-1.2

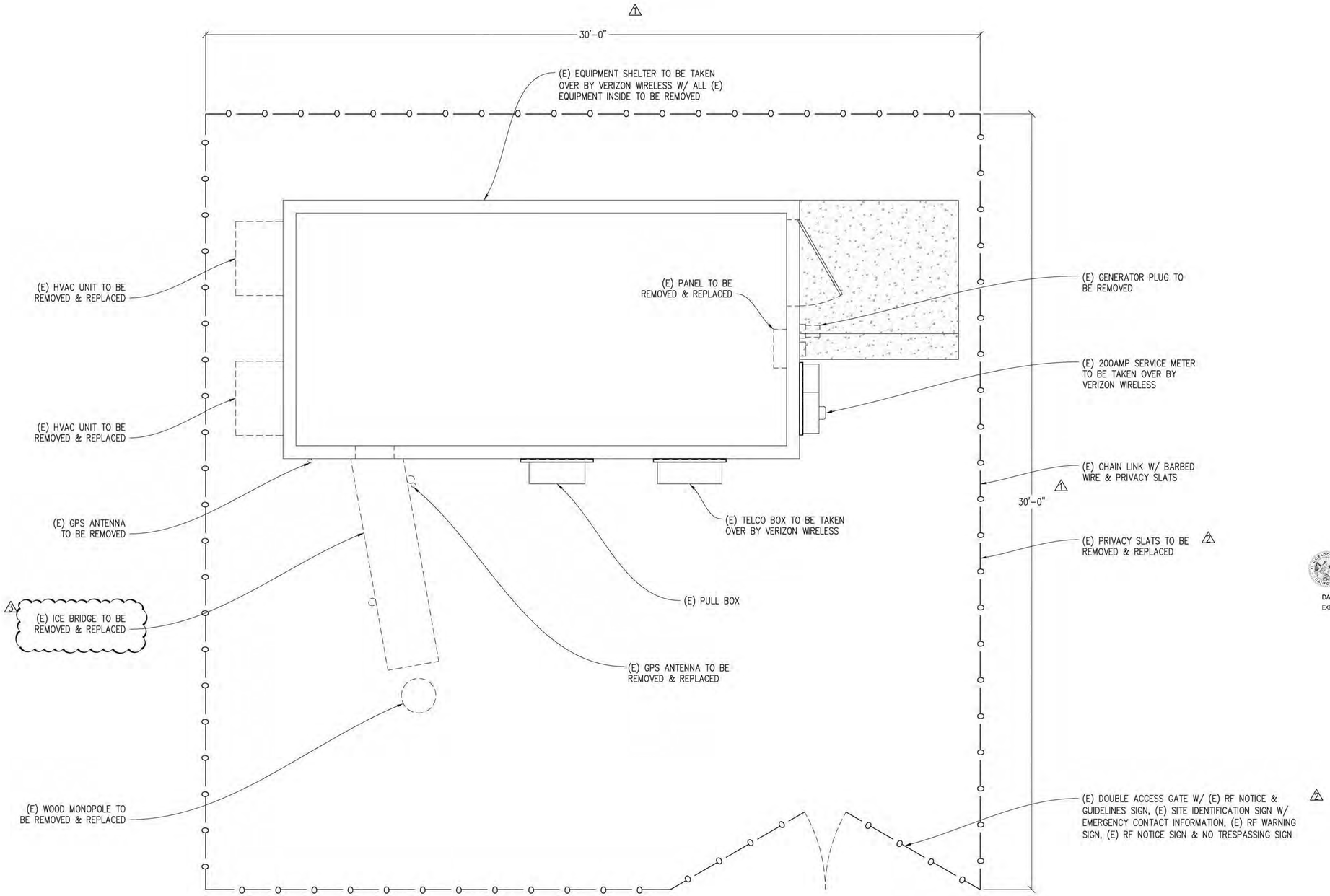

(E) EQUIPMENT PLAN

½"=1'-0"

0 6" 1' 2' 3' 5' 7' 10'

APPROVED
EL DORADO COUNTY
PLANNING COMMISSION
DATE: May 14, 2026
EXECUTIVE SECRETARY: Karen L. Garner

Issued For:

PLACERVILLE SHERIFF

3170 GOLD NUGGET WY,
PLACERVILLE, CA 95667

PREPARED FOR

verizon

2770 SHADELANDS DR, BLDG 11
WALNUT CREEK, CA 94598

Vendor:

EPIC WIRELESS GROUP LLC
Connecting a Wireless World

MDG LOCATION ID:	5000940687
PROJECT ID:	17120113
DRAWN BY:	C. COLSTON
CHECKED BY:	S. SAVIG
APPROVED BY:	J. SPORE

ISSUE STATUS

REV	DATE	DESCRIPTION	CAD
5	05/13/26	CLIENT REV	C.C.
4	02/25/26	PLANNING COMMS	T.T.
3	12/18/25	PLANNING COMMS	S.V.
4	09/30/25	CLIENT REV	S.V.
3	09/25/25	CLIENT REV	T.T.
2	02/12/24	CD 100%	S.D.
1	02/06/24	CLIENT REV	S.D.
0	01/11/24	CD 90%	C.T.C

Licensee:

REGISTERED PROFESSIONAL ENGINEER
JAMES R. SPORE
S6336
STRUCTURAL
STATE OF CALIFORNIA

IT IS A VIOLATION OF LAW FOR ANY PERSON, UNLESS THEY ARE ACTING UNDER THE DIRECTION OF A LICENSED PROFESSIONAL ENGINEER, TO ALTER THIS DOCUMENT.

ENGINEER:

Streamline Engineering and Design, Inc.
3943 Taylor Road, Suite A, Loomis, CA 95650
Contact: Kevin Stanson Phone: 916-660-1930
E-Mail: kevin@streamlineeng.com Fax: 916-660-1941

THESE PLANS AND SPECIFICATIONS, AS INSTRUMENTS OF SERVICE, ARE AND SHALL REMAIN THE PROPERTY OF STREAMLINE ENGINEERING AND DESIGN, INC. WHEN THE PROJECT FOR WHICH THEY WERE PREPARED IS COMPLETED, THESE PLANS AND SPECIFICATIONS ARE NOT TO BE USED BY OTHERS EXCEPT BY WRITTEN AGREEMENT WITH THE ENGINEER. Copyright © 2025 STREAMLINE ENGINEERING AND DESIGN, INC. ALL RIGHTS RESERVED.

SHEET TITLE:

EQUIPMENT PLAN

SHEET NUMBER:

A-1.3

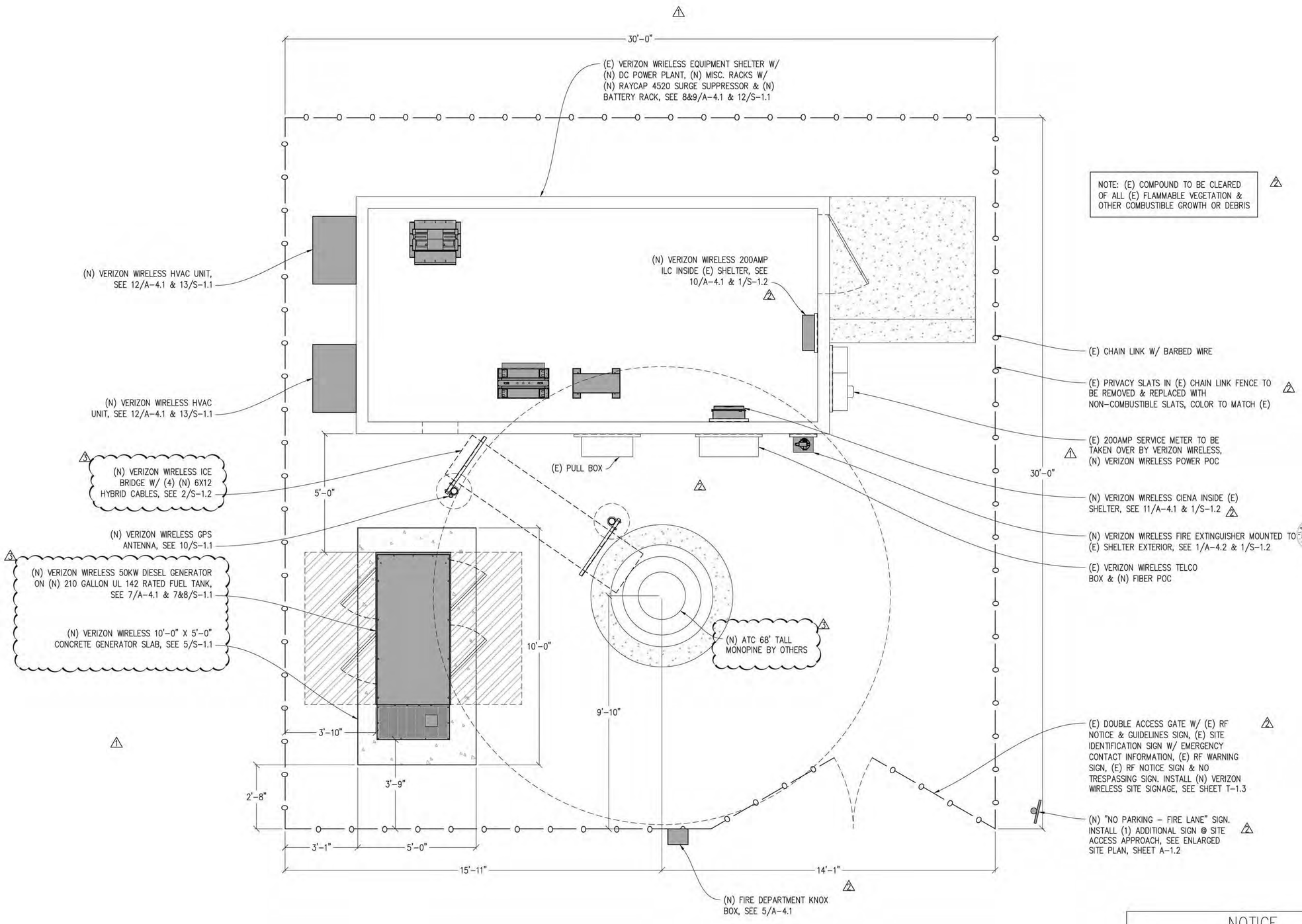

APPROVED
EL DORADO COUNTY
PLANNING COMMISSION
DATE: May 14, 2026
EXECUTIVE SECRETARY: Karen L. Garner

(N) EQUIPMENT PLAN

½"=1'-0"

0 6" 1' 2' 3' 5' 7' 10'

NOTICE

NEW MONOPINE TO BE ANALYZED BY OTHERS. STREAMLINE ENGINEERING & DESIGN INC. IS NOT RESPONSIBLE FOR THE EVALUATION OF THE NEW MONOPINE, BASE PLATE, ANCHOR BOLTS, FOUNDATION OR ANTENNA/RRU MOUNT FRAMING & CONNECTIONS FOR NEW LOADING CONDITIONS.

Issued For:

PLACERVILLE SHERIFF

3170 GOLD NUGGET WY, PLACERVILLE, CA 95667

PREPARED FOR

verizon

2770 SHADELANDS DR, BLDG 11
WALNUT CREEK, CA 94598

Vendor:

EPIC WIRELESS GROUP LLC
Connecting a Wireless World

MDG LOCATION ID:	5000940687
PROJECT ID:	17120113
DRAWN BY:	C. COLSTON
CHECKED BY:	S. SAVIG
APPROVED BY:	J. SPORE

ISSUE STATUS

REV	DATE	DESCRIPTION	CAD
3	05/13/26	CLIENT REV	C.C.
2	02/25/26	PLANNING COMMS	T.T.
1	12/18/25	PLANNING COMMS	S.V.
4	09/30/25	CLIENT REV	S.V.
3	09/25/25	CLIENT REV	T.T.
2	02/12/24	CD 100%	S.D.
1	02/06/24	CLIENT REV	S.D.
0	01/11/24	CD 90%	C.T.C

Licensee:

REGISTERED PROFESSIONAL ENGINEER JAMES R. SPORE S6336 STRUCTURAL STATE OF CALIFORNIA

IT IS A VIOLATION OF LAW FOR ANY PERSON, UNLESS THEY ARE ACTING UNDER THE DIRECTION OF A LICENSED PROFESSIONAL ENGINEER, TO ALTER THIS DOCUMENT.

ENGINEER:

Streamline Engineering and Design, Inc.
3848 Taylor Road, Suite A, Loomis, CA 95650
Contact: Kevin Scrivener Phone: 916-660-1930
E-Mail: kevin@streamlineeng.com Fax: 916-660-1941

THESE PLANS AND SPECIFICATIONS, AS INSTRUMENTS OF SERVICE, ARE AND SHALL REMAIN THE PROPERTY OF STREAMLINE ENGINEERING AND DESIGN INC. THE REPRODUCTION, ALTERATION OR USE FOR ANY PURPOSE OTHER THAN THOSE AUTHORIZED BY THE ARCHITECT IS FORBIDDEN. NO ALTERATIONS OR REPRODUCTIONS SHALL BE MADE WITHOUT WRITTEN PERMISSION FROM THE ARCHITECT. THESE DRAWINGS AND SPECIFICATIONS SHALL NOT BE USED FOR ANY PURPOSE NOT SPECIFICALLY ENTITLED BY THE ARCHITECT. COPYRIGHT © 2009, STREAMLINE ENGINEERING AND DESIGN INC. ALL RIGHTS RESERVED.

SHEET TITLE:

EQUIPMENT PLAN

SHEET NUMBER:

A-1.4

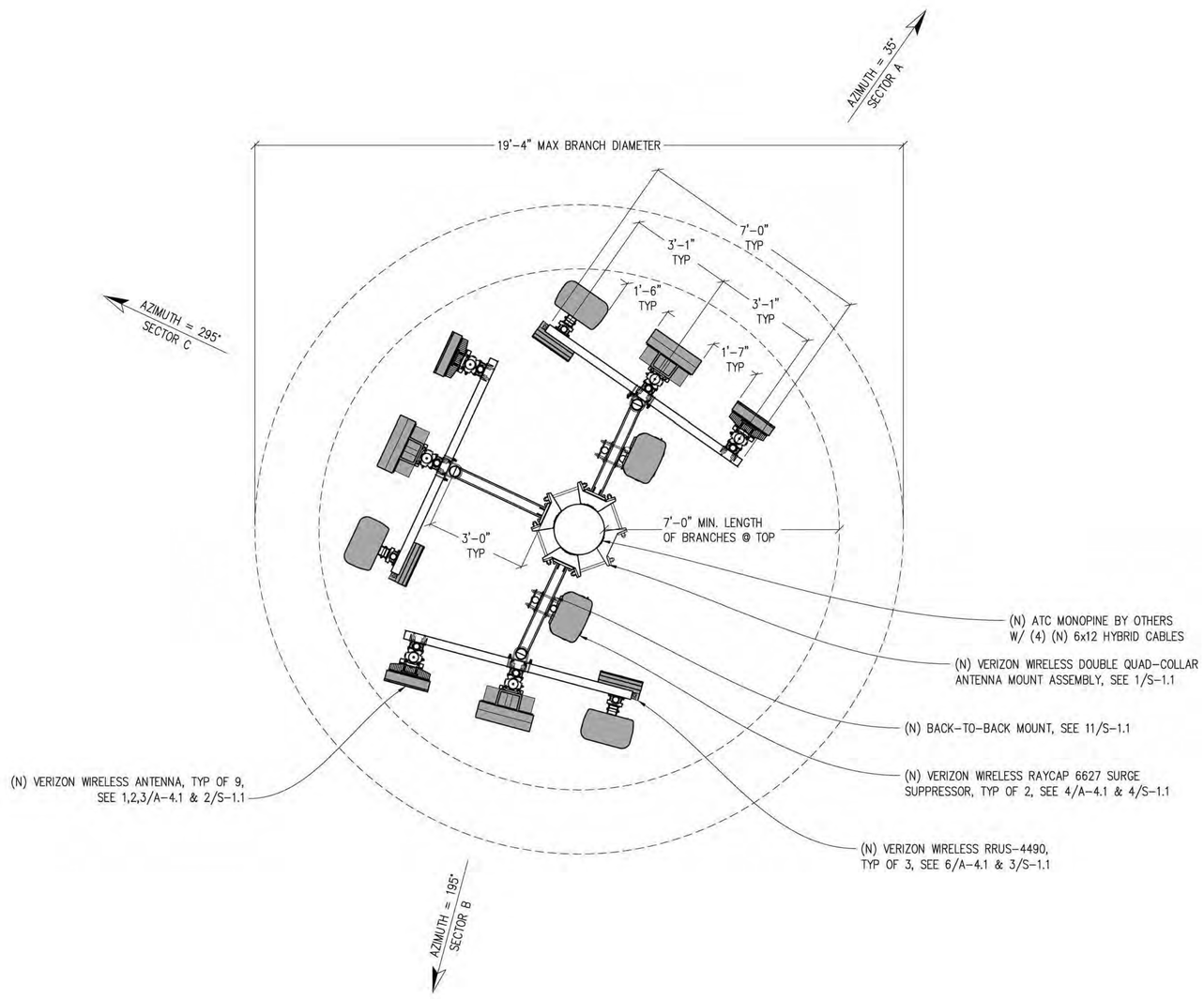

ANTENNA PLAN

½"=1'-0"

0 6" 1' 2' 3' 5' 7' 10'

NOTICE

NEW MONOPINE TO BE ANALYZED BY OTHERS. STREAMLINE ENGINEERING & DESIGN INC. IS NOT RESPONSIBLE FOR THE EVALUATION OF THE NEW MONOPINE, BASE PLATE, ANCHOR BOLTS, FOUNDATION OR ANTENNA/RRU MOUNT FRAMING & CONNECTIONS FOR NEW LOADING CONDITIONS.

APPROVED
EL DORADO COUNTY
PLANNING COMMISSION
DATE: May 14, 2026
EXECUTIVE SECRETARY: Karen L. Garner

Issued For:

PLACERVILLE SHERIFF

3170 GOLD NUGGET WY,
PLACERVILLE, CA 95667

PREPARED FOR

verizon

2770 SHADELANDS DR, BLDG 11
WALNUT CREEK, CA 94598

Vendor:

EPIC WIRELESS GROUP LLC
Connecting a Wireless World

MDG LOCATION ID:	5000940687
PROJECT ID:	17120113
DRAWN BY:	C. COLSTON
CHECKED BY:	S. SAVIG
APPROVED BY:	J. SPORE

ISSUE STATUS

REV	DATE	DESCRIPTION	CAD
5	05/13/26	CLIENT REV	C.C.
4	02/25/26	PLANNING COMMS	T.T.
3	12/18/25	PLANNING COMMS	S.V.
4	09/30/25	CLIENT REV	S.V.
3	09/25/25	CLIENT REV	T.T.
2	02/12/24	CD 100%	S.D.
1	02/06/24	CLIENT REV	S.D.
0	01/11/24	CD 90%	C.T.C

Licensee:

REGISTERED PROFESSIONAL ENGINEER
JAMES R. SPORE
S6336
STRUCTURAL
STATE OF CALIFORNIA

IT IS A VIOLATION OF LAW FOR ANY PERSON, UNLESS THEY ARE ACTING UNDER THE DIRECTION OF A LICENSED PROFESSIONAL ENGINEER, TO ALTER THIS DOCUMENT.

ENGINEER:

Streamline Engineering and Design, Inc.
3643 Taylor Road, Suite A, Loomis CA 95650
Contact: Kevin Snowden Phone: 916-660-1930
E-Mail: kevin@streamlineeng.com Fax: 916-660-1941

These PLANS AND SPECIFICATIONS, AS INSTRUMENTS OF SERVICE, ARE AND SHALL REMAIN THE PROPERTY OF STREAMLINE ENGINEERING AND DESIGN INC. WHEN THEY ARE PRINTED, THEY ARE BASED ON SPECIFIC INFORMATION AND FOR USE BY THE INTENDED PARTY ONLY AND FOR THE SPECIFIC PROJECT AND PURPOSE INDICATED. THESE DRAWINGS AND SPECIFICATIONS SHALL NOT BE RE-USED OR REPRODUCED IN ANY FORM WITHOUT THE WRITTEN CONSENT OF STREAMLINE ENGINEERING AND DESIGN INC. Copyright © 2026, STREAMLINE ENGINEERING AND DESIGN INC. ALL RIGHTS RESERVED.

SHEET TITLE:

ANTENNA PLAN

SHEET NUMBER:

A-2.1

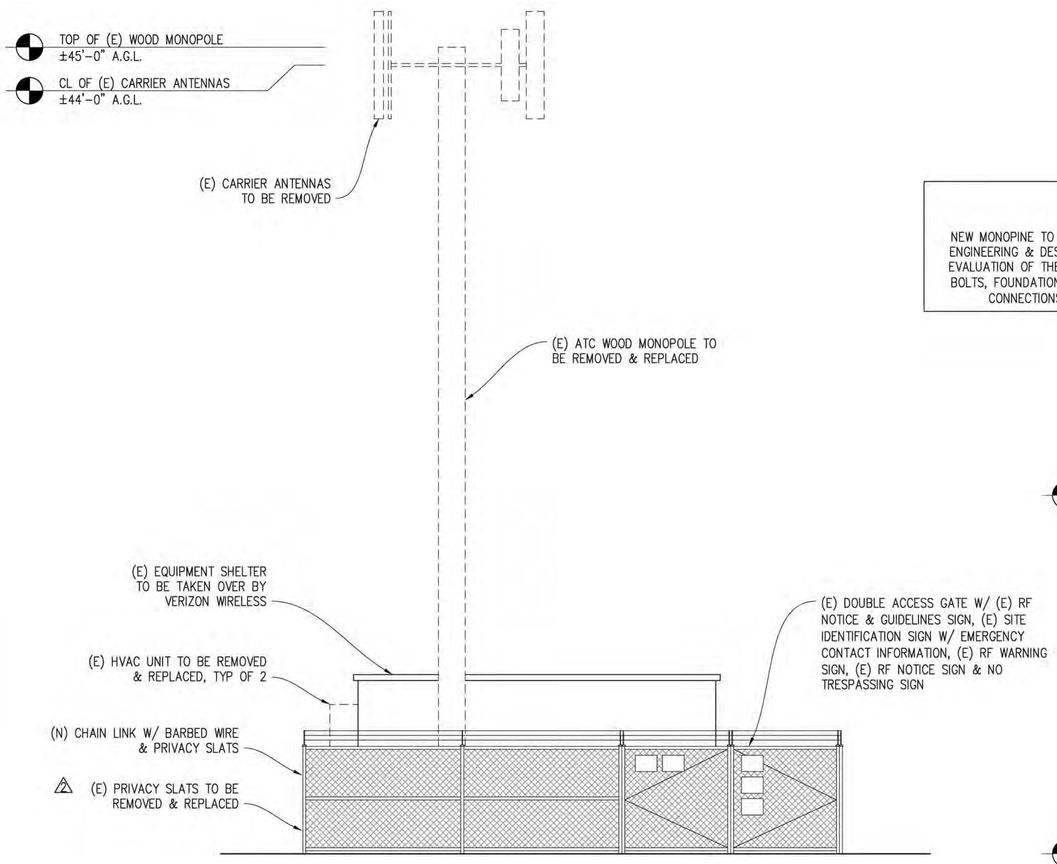

(E) SOUTH ELEVATION

1/4"=1'-0"

0 1' 2' 4' 6' 10' 14' 20'

NOTICE

NEW MONOPINE TO BE ANALYZED BY OTHERS. STREAMLINE ENGINEERING & DESIGN INC. IS NOT RESPONSIBLE FOR THE EVALUATION OF THE NEW MONOPINE, BASE PLATE, ANCHOR BOLTS, FOUNDATION OR ANTENNA/RRU MOUNT FRAMING & CONNECTIONS FOR NEW LOADING CONDITIONS.

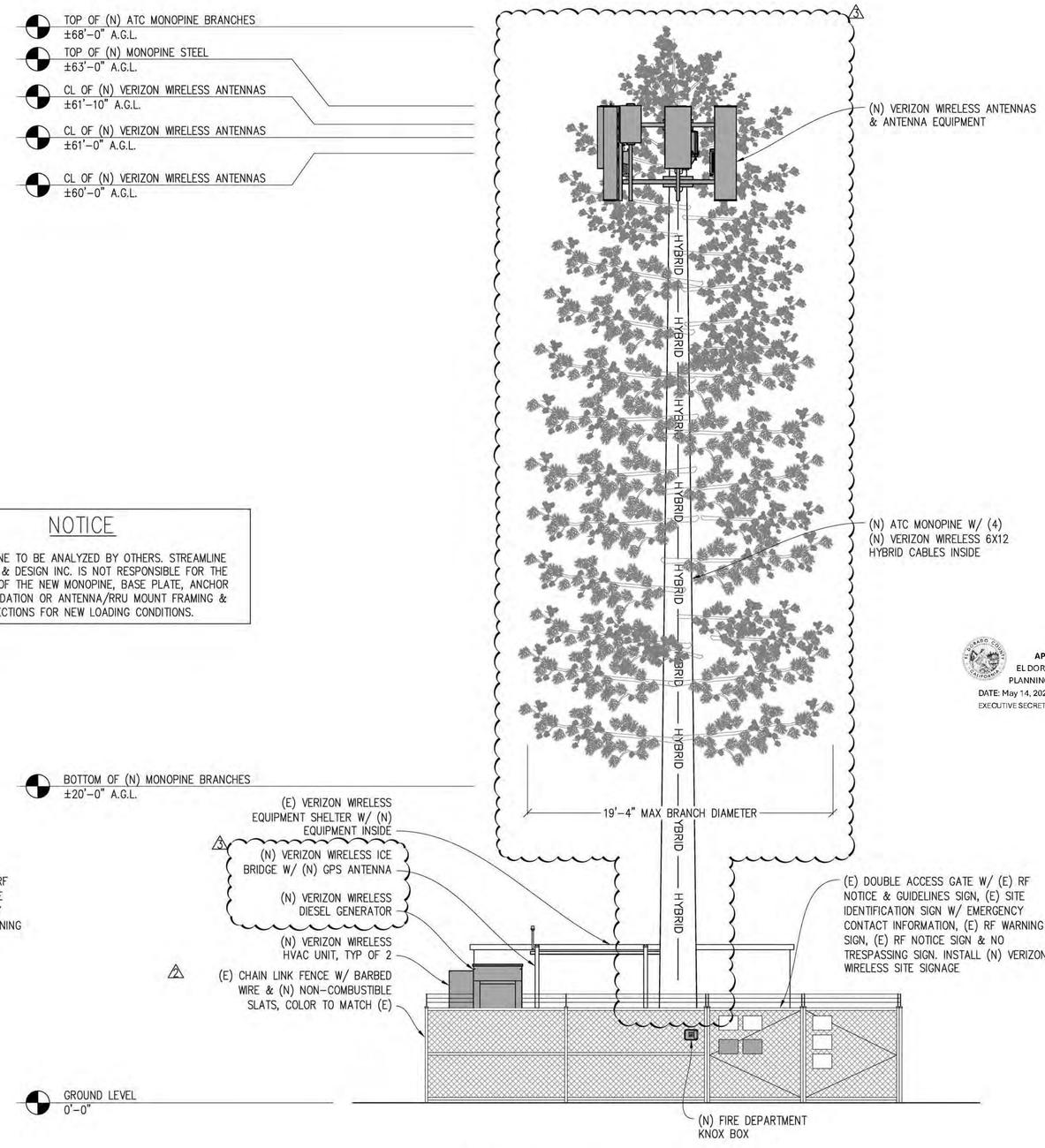

(N) SOUTH ELEVATION

1/4"=1'-0"

0 1' 2' 4' 6' 10' 14' 20'

APPROVED
EL DORADO COUNTY
PLANNING COMMISSION
DATE: May 14, 2026
EXECUTIVE SECRETARY: Karen L. Garner

Issued For:

PLACERVILLE SHERIFF

3170 GOLD NUGGET WY,
PLACERVILLE, CA 95667

PREPARED FOR

verizon

2770 SHADELANDS DR, BLDG 11
WALNUT CREEK, CA 94598

Vendor:

EPIC WIRELESS GROUP LLC
Connecting a Wireless World

MDG LOCATION ID:	5000940687
PROJECT ID:	17120113
DRAWN BY:	C. COLSTON
CHECKED BY:	S. SAVIG
APPROVED BY:	J. SPORE

ISSUE STATUS

REV	DATE	DESCRIPTION	CAD
5	05/13/26	CLIENT REV	C.C.
2	02/25/26	PLANNING COMMS	T.T.
1	12/18/25	PLANNING COMMS	S.V.
4	09/30/25	CLIENT REV	S.V.
3	09/25/25	CLIENT REV	T.T.
2	02/12/24	CD 100%	S.D.
1	02/06/24	CLIENT REV	S.D.
0	01/11/24	CD 90%	C.T.C

Licensee:

REGISTERED PROFESSIONAL ENGINEER JAMES R. SPORE S6336 STRUCTURAL STATE OF CALIFORNIA

IT IS A VIOLATION OF LAW FOR ANY PERSON, UNLESS THEY ARE ACTING UNDER THE DIRECTION OF A LICENSED PROFESSIONAL ENGINEER, TO ALTER THIS DOCUMENT.

ENGINEER:

Streamline Engineering and Design, Inc.
3843 Taylor Road, Suite A, Loomis, CA 95650
Contact: Kevin Spencer Phone: 916-660-1930
E-Mail: kevin@streamlineeng.com Fax: 916-660-1941

THESE PLANS AND SPECIFICATIONS, AS INSTRUMENTS OF SERVICE, ARE SHALL REMAIN THE PROPERTY OF STREAMLINE ENGINEERING & DESIGN INC. WHETHER THE PROJECT FOR WHICH THEY WERE MADE IS EXECUTED OR NOT. THESE DRAWINGS AND SPECIFICATIONS SHALL NOT BE USED BY ANY PERSON FOR ANY PURPOSE OTHER THAN THE PROJECT FOR WHICH THEY WERE PREPARED BY THE ENGINEER. Copyright © 2025, STREAMLINE ENGINEERING AND DESIGN INC. ALL RIGHTS RESERVED.

SHEET TITLE:

ELEVATIONS

SHEET NUMBER:

A-3.1

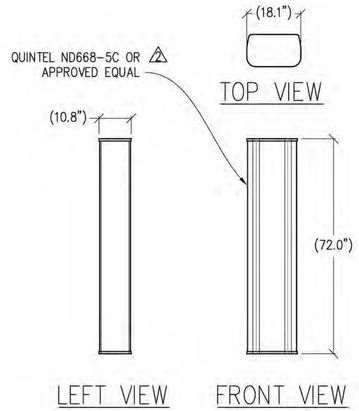

1 ANTENNA DETAIL
½"=1'-0" WEIGHT: 61 LBS

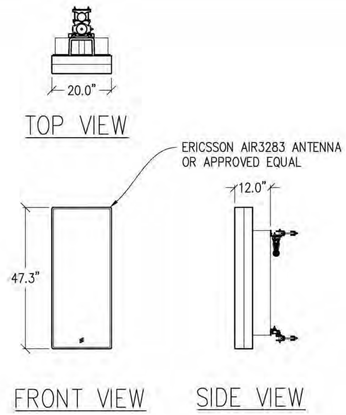

2 ANTENNA DETAIL
½"=1'-0" MAX WEIGHT: 110 LBS

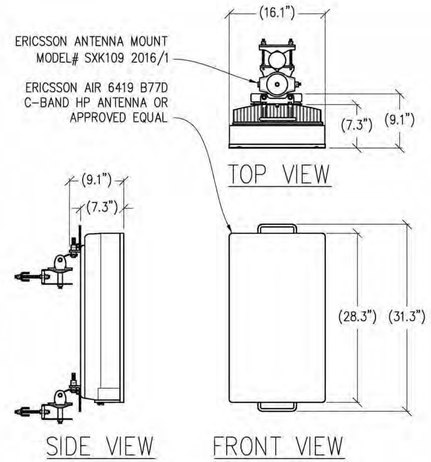

3 ANTENNA DETAIL
1"=1'-0" MAX WEIGHT: 64 LBS

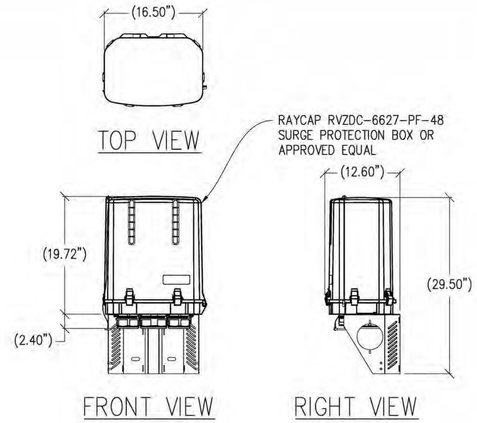

4 SURGE PROTECTION BOX
1"=1'-0" MAX WEIGHT: 32.0 LBS

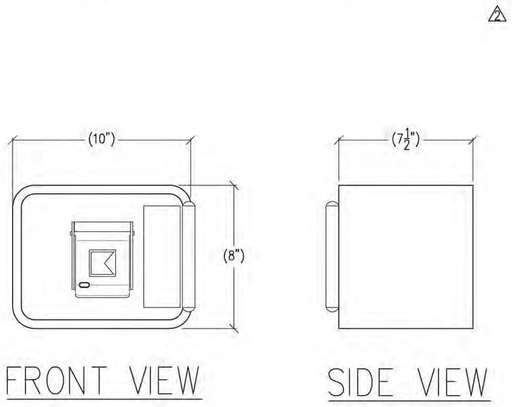

5 KNOX-BOX 3200 DETAIL
3"=1'-0"

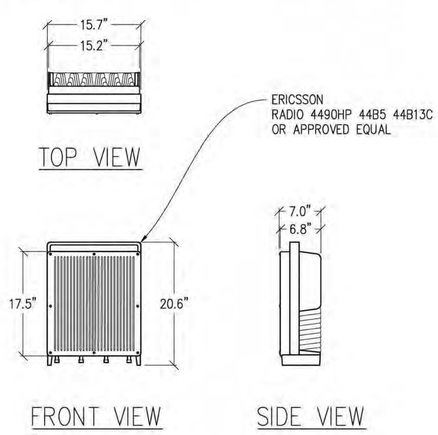

6 RADIO 4490HP DETAIL
1"=1'-0" MAX WEIGHT: 68.4 LBS

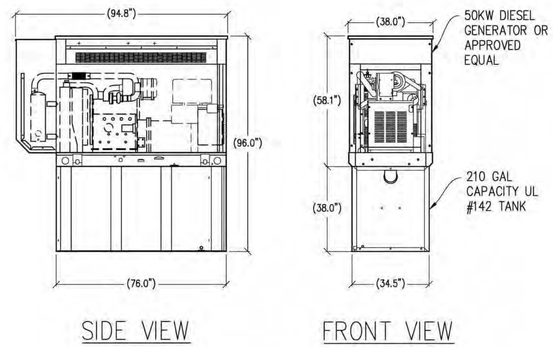

7 50KW GENERATOR DETAIL
⅜"=1'-0" MAX FULL WEIGHT: 4,697 LBS

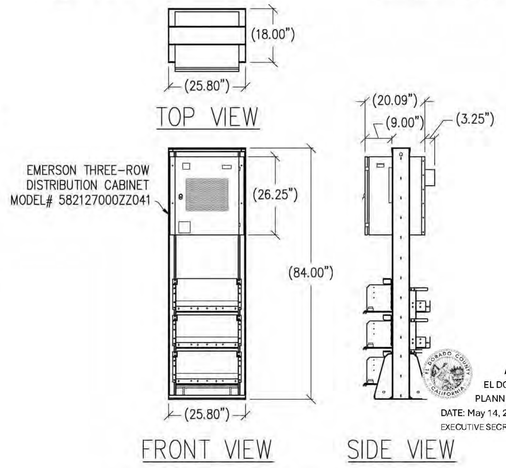

APPROVED
EL DORADO COUNTY
PLANNING COMMISSION
DATE: May 14, 2026
EXECUTIVE SECRETARY: Karen L. Garner

8 POWER RACK DETAIL
½"=1'-0" MAX WEIGHT: 1,155 LBS

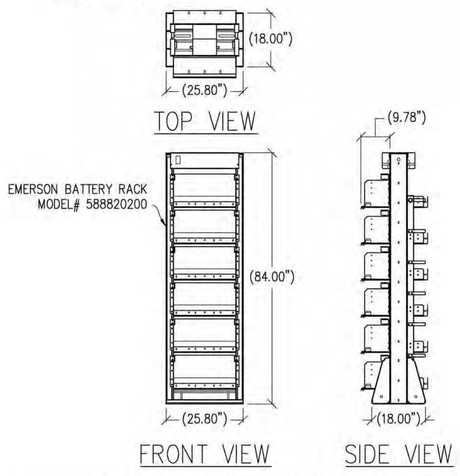

9 BATTERY RACK DETAIL
½"=1'-0" MAX WEIGHT: 2,028 LBS

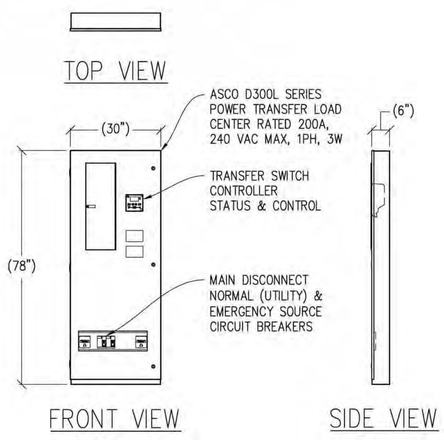

10 ILC DETAIL
½"=1'-0"

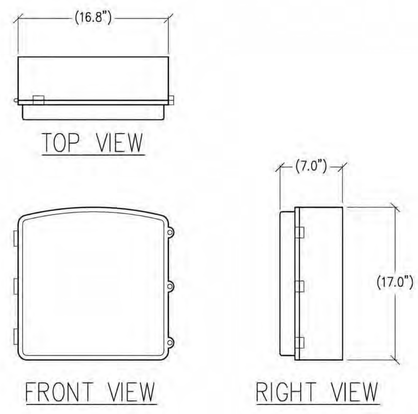

11 CN 3931 DETAIL
1½"=1'-0" MAX WEIGHT: 28.6 LBS

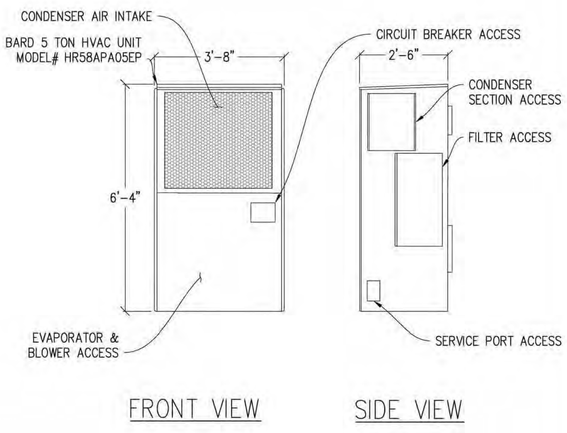

12 COMBO HVAC UNIT DETAIL
½"=1'-0" MAX WEIGHT: 547 LBS

Issued For:

PLACERVILLE SHERIFF

3170 GOLD NUGGET WY, PLACERVILLE, CA 95667

PREPARED FOR

verizon

2770 SHADELANDS DR, BLDG 11
WALNUT CREEK, CA 94598

Vendor:

EPIC WIRELESS GROUP LLC
Connecting a Wireless World

MDG LOCATION ID:	5000940687
PROJECT ID:	17120113
DRAWN BY:	C. COLSTON
CHECKED BY:	S. SAVIG
APPROVED BY:	J. SPORE

ISSUE STATUS

REV	DATE	DESCRIPTION	CAD
5	05/13/26	CLIENT REV	C.C.
4	02/25/26	PLANNING COMMS	T.T.
3	12/18/25	PLANNING COMMS	S.V.
4	09/30/25	CLIENT REV	S.V.
3	09/25/25	CLIENT REV	T.T.
2	02/12/24	CD 100%	S.D.
1	02/06/24	CLIENT REV	S.D.
0	01/11/24	CD 90%	C.T.C

Licensee:

REGISTERED PROFESSIONAL ENGINEER JAMES R. SPORE S6336 STRUCTURAL STATE OF CALIFORNIA

IT IS A VIOLATION OF LAW FOR ANY PERSON, UNLESS THEY ARE ACTING UNDER THE DIRECTION OF A LICENSED PROFESSIONAL ENGINEER, TO ALTER THIS DOCUMENT.

ENGINEER:

Streamline Engineering and Design, Inc.
3943 Taylor Road, Suite A, Loomis, CA 95650
Contact: Kevin Spencer Phone: 916-660-1930
E-Mail: kevin@streamlineeng.com Fax: 916-660-1941

THESE PLANS AND SPECIFICATIONS, AS INSTRUMENTS OF SERVICE, ARE AND SHALL REMAIN THE PROPERTY OF STREAMLINE ENGINEERING AND DESIGN INC. THEY ARE TO BE USED ONLY FOR THE PROJECT AND SITE NAMED HEREIN. THESE PLANS ARE EXPECTED TO CONFORM TO THE CURRENT CODES AS ADOPTED BY THE JURISDICTION IN WHICH THE PROJECT IS LOCATED. THESE DRAWINGS ARE REPRESENTATIONS ONLY, NOT TO BE USED FOR CONSTRUCTION UNLESS SIGNED AND SEALED BY A LICENSED PROFESSIONAL ENGINEER. Copyright © 2025, STREAMLINE ENGINEERING AND DESIGN INC. ALL RIGHTS RESERVED.

SHEET TITLE:

DETAILS

SHEET NUMBER:

A-4.1

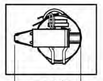

7 3/4"

TOP VIEW

SPECIFICATIONS
SIZE & CAPACITY: 6 LBS
HEIGHT: 16 IN
WIDTH: 7-3/4 IN
DEPTH: 5 IN
RANGE: 15-21 FT

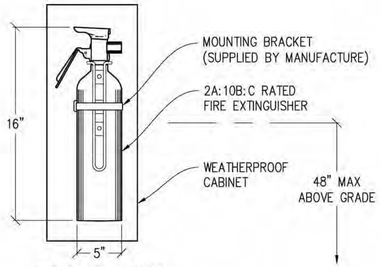

FRONT VIEW

1 FIRE EXTINGUISHER DETAIL

N.T.S.

APPROVED
EL DORADO COUNTY
PLANNING COMMISSION
DATE: May 14, 2026
EXECUTIVE SECRETARY: Karen L. Garner

Issued For:

PLACERVILLE
SHERIFF

3170 GOLD NUGGET WY,
PLACERVILLE, CA 95667

PREPARED FOR

verizon

2770 SHADELANDS DR, BLDG 11
WALNUT CREEK, CA 94598

Vendor:

EPIC WIRELESS GROUP LLC
Connecting a Wireless World

MDG LOCATION ID:	5000940687
PROJECT ID:	17120113
DRAWN BY:	C. COLSTON
CHECKED BY:	S. SAVIG
APPROVED BY:	J. SPORE

ISSUE STATUS

REV	DATE	DESCRIPTION	CAD
3	05/13/26	CLIENT REV	C.C.
2	02/25/26	PLANNING COMMS	T.T.
1	12/18/25	PLANNING COMMS	S.V.
4	09/30/25	CLIENT REV	S.V.
3	09/25/25	CLIENT REV	T.T.
2	02/12/24	CD 100%	S.D.
1	02/06/24	CLIENT REV	S.D.
0	01/11/24	CD 90%	C.T.C

Licensee:

REGISTERED PROFESSIONAL ENGINEER
JAMES R. SPORE
S6336
STRUCTURAL
STATE OF CALIFORNIA

IT IS A VIOLATION OF LAW FOR ANY PERSON, UNLESS THEY ARE ACTING UNDER THE DIRECTION OF A LICENSED PROFESSIONAL ENGINEER, TO ALTER THIS DOCUMENT.

ENGINEER:

Streamline Engineering and Design, Inc.
3843 Taylor Road, Suite A, Loomis, CA 95650
Contact: Kevin Spencer Phone: 916-660-1930
E-Mail: kevin@streamlineeng.com Fax: 916-660-1941

THESE PLANS AND SPECIFICATIONS, AS INSTRUMENTS OF SERVICE, ARE AND SHALL REMAIN THE PROPERTY OF STREAMLINE ENGINEERING AND DESIGN INC. THEY ARE NOT TO BE USED, IN WHOLE OR IN PART, FOR ANY OTHER PROJECT. THESE DRAWINGS AND SPECIFICATIONS SHALL NOT BE USED BY ANY PERSON, FIRM OR CORPORATION FOR ANY PURPOSE WHATSOEVER WITHOUT THE WRITTEN PERMISSION OF THE ENGINEER. Copyright © 2020, STREAMLINE ENGINEERING AND DESIGN INC. ALL RIGHTS RESERVED.

SHEET TITLE:

DETAILS

SHEET NUMBER:

A-4.2

connect@alpinepowersystems.com
877-993-8855

ALPINE POWER SYSTEMS
A Division of TEL Inc.

Click to view product web page

PowerSafe® SBS Front Terminal

Telecommunications — *NEBS™ Certified*

Battery Range Summary

The PowerSafe® SBS® Front Terminal battery further extends the technical leadership of PowerSafe SBS battery product line: not only do PowerSafe SBS Front Terminal monoblocs retain the benefits typically associated with Thin Plate Pure Lead (TPPL) Technology such as long life, high energy density, superior shelf life, etc., they also deliver exceptional cyclic performance in both float and fast charge applications, even in the hottest and harshest operating environments.

Where conventional Valve Regulated Lead Acid (VRLA)/Absorbed Glass Mat (AGM) batteries struggle to cope with harsh conditions and frequent power outages, cutting edge (TPPL) technology makes PowerSafe 12V batteries the perfect solution for the challenging operating conditions of today's telecommunication networks.

PowerSafe SBS batteries are designed to high quality standards and a unique manufacturing methods means superior energy and power, high performance and proven reliability, there is no substitute to PowerSafe SBS Front Terminal batteries.

Features and Benefits

- Capacity range 31-190Ah
- 12V monobloc configurations
- Multiple string configurations available
- Two year shelf life
- SR4228 compliant
- Proven long service life
- High energy density and cycling capability

EnerSys® Power-Full Solutions — RESERVE POWER

Publication No: US-SBSF-RS-004 - January 2014

Construction

- Pasted positive plates are designed for prolong service life and enhance corrosion resistance
- Separators are low resistance microporous (AGM). The electrolyte is absorbed within the AGM, preventing acid spills in case of accidental damage
- Container and cover in flame retardant UL94-V0 material, highly resistant to shock and vibration
- Terminals are stainless steel front access with top access copper alloy insert. Top and front access terminations provide maximum conductivity
- Self-regulating one way pressure relief valves prevents ingress of atmospheric oxygen

Installation and Operation

- Space efficient footprint
- VRLA design, reduces maintenance requirements
- Lifting handles for easy handling
- Greater than 10 year life expectancy in float service at 77°F (25°C)
- Increased active material surface area yields great cycling capability
- Operating temperature: -40°F (-40°C) to 122°F (50°C) Recommended temperature: 68°F (20°C) to 86°F (30°C)

Standards

- Meets criteria for "non-spillable" batteries
- Complies with Telcordia® SR-4228, Network Equipment Building System (NEBS™) Criteria Levels
- The management systems governing the manufacture of this product are ISO 9001:2008 and ISO 14001:2004 certified

General Specifications

	Nominal Capacity (Ah)		Nominal Dimensions						Weight - Nominal	
			Length		Width		Height		Unpacked	
Cell Type	10 hr rate to 1.80V pc @20°C	8 hr rate to 1.75V pc @77°F	in	mm	in	mm	in	mm	lbs.	kg
SBS 86F	31	31	11.9	303	3.8	97	6.3	159	22.7	10.3
SBS 616F	38	38	11.9	303	3.8	97	7.2	184	28.2	12.8
SBS 814F	62	62	11.9	303	3.8	97	10.4	264	42.0	19.1
SBS 011F	92	91	16.4	417	4.1	105	10.1	256	61.6	28.0
SBS 100F	100	100	15.8	305	4.3	108	11.3	287	71.9	32.6
SBS 112F	112	112	22.1	561	4.9	125	9.0	228	90.4	41.1
SBS 146F	145	145	17.9	455	6.8	173	9.4	238	105.0	47.7
SBS 166F	165	165	17.9	455	6.8	173	10.8	273	117.4	53.3
SBS 170F	170	170	22.1	561	4.9	125	11.1	283	115.7	52.5
SBS 190F	190	190	22.1	561	4.9	125	12.4	316	132.3	60.0

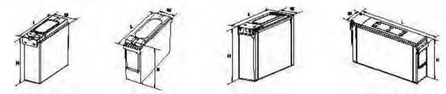

SBS 86F-814F — SBS 011F — SBS 100F-112F — SBS 146F - 190F

ALPINE POWER SYSTEMS
A Division of TEL Inc.

connect@alpinepowersystems.com
877-993-8855

Battery Services for Backup Power

- Battery Installation
- Capacity and Acceptance
- Preventative Maintenance

backup power | telecom | motive power
www.alpinepowersystems.com

NEW BATTERIES

BATTERY TYPE:		ENERSYS POWERSAFE SBS 190F	
NUMBER OF UNITS W/BATTERIES		2	
NUMBER OF BATTERIES :		16	
MATERIAL:	ELECTROLYTE	VOLUME: 2.34 GALLONS	BATTERY TOTAL: 37.44 GALLONS
MATERIAL:	ACID	WEIGHT: 10.1 LBS	BATTERY TOTAL: 161.6 LBS
MATERIAL:	LEAD	WEIGHT: 95.8 LBS	BATTERY TOTAL: 1532.8 LBS
TOTAL KWH:	190AH X 12V X 16 / 1000 = 36.48 KWH		

APPROVED
EL DORADO COUNTY
PLANNING COMMISSION
DATE: May 14, 2026
EXECUTIVE SECRETARY: Karen L. Garner

Issued For:

PLACERVILLE SHERIFF

3170 GOLD NUGGET WY,
PLACERVILLE, CA 95667

PREPARED FOR

verizon

2770 SHADELANDS DR, BLDG 11
WALNUT CREEK, CA 94598

Vendor:

EPIC WIRELESS GROUP LLC
Connecting a Wireless World

MDG LOCATION ID:	5000940687
PROJECT ID:	17120113
DRAWN BY:	C. COLSTON
CHECKED BY:	S. SAVIG
APPROVED BY:	J. SPORE

ISSUE STATUS

REV	DATE	DESCRIPTION	CAD
5	05/13/26	CLIENT REV	C.C.
4	02/25/26	PLANNING COMMS	T.T.
3	12/18/25	PLANNING COMMS	S.V.
4	09/30/25	CLIENT REV	S.V.
3	09/25/25	CLIENT REV	T.T.
2	02/12/24	CD 100%	S.D.
1	02/06/24	CLIENT REV	S.D.
0	01/11/24	CD 90%	C.T.C

Licensee:

REGISTERED PROFESSIONAL ENGINEER JAMES R. SPORE S6336 STRUCTURAL STATE OF CALIFORNIA

IT IS A VIOLATION OF LAW FOR ANY PERSON, UNLESS THEY ARE ACTING UNDER THE DIRECTION OF A LICENSED PROFESSIONAL ENGINEER, TO ALTER THIS DOCUMENT.

ENGINEER:

Streamline Engineering and Design, Inc.
3849 Taylor Road, Suite A, Loomis CA 95650
Contact: Kevin Savage Phone: 916-660-1930
E-Mail: kevin@streamlineeng.com Fax: 916-660-1941

THESE PLANS AND SPECIFICATIONS AS INSTRUMENTS OF SERVICE, ARE AND SHALL REMAIN THE PROPERTY OF STREAMLINE ENGINEERING AND DESIGN INC. WHEN THESE PLANS AND SPECIFICATIONS HAVE THEIR PURPOSE FULFILLED, THEY ARE TO BE RETURNED TO STREAMLINE ENGINEERING AND DESIGN INC. THESE DRAWINGS AND SPECIFICATIONS SHALL NOT BE USED FOR OTHER WORK AND ARE TO BE KEPT IN THE EXCLUSIVE POSSESSION OF STREAMLINE ENGINEERING AND DESIGN INC. Copyright © 2005 STREAMLINE ENGINEERING AND DESIGN INC. ALL RIGHTS RESERVED.

SHEET TITLE:

BATTERY SPECIFICATIONS

SHEET NUMBER:

A-5.1

SD050 | 3.3L | 50 kW

INDUSTRIAL DIESEL GENERATOR SET

EPA Certified Stationary Emergency

GENERAC | INDUSTRIAL POWER

Standby Power Rating
50 kW, 63 kVA, 60 Hz

Prime Power Rating
45 kW, 56 kVA, 60 Hz

Image used for illustration purposes only

*EPA Certified Prime ratings are not available in the US or its Territories

Codes and Standards

Not all codes and standards apply to all configurations. Contact factory for details.

- UL2200, UL6200, UL1236, UL489, UL142
- CSA C22.2, ULC S601
- BS5514 and DIN 6271
- SAE J1349
- NFPA 37, 70, 99, 110
- NEC700, 701, 702, 708
- ISO 3046, 7637, 8528, 9001
- NEMA ICS10, MG1, 250, ICS6, AB1
- ANSI C62.41
- IBC 2009, CBC 2010, IBC 2012, ASCE 7-05, ASCE 7-10, ICC-ES AC-156 (2012)

Powering Ahead

For over 60 years, Generac has provided innovative design and superior manufacturing.

Generac ensures superior quality by designing and manufacturing most of its generator components, including alternators, enclosures and base tanks, control systems and communications software.

Generac gensets utilize a wide variety of options, configurations and arrangements, allowing us to meet the standby power needs of practically every application.

Generac searched globally to ensure the most reliable engines power our generators. We choose only engines that have already been proven in heavy-duty industrial applications under adverse conditions.

Generac is committed to ensuring our customers' service support continues after their generator purchase.

SD050 | 3.3L | 50 kW
INDUSTRIAL DIESEL GENERATOR SET
EPA Certified Stationary Emergency
GENERAC | INDUSTRIAL POWER

STANDARD FEATURES

ENGINE SYSTEM
- Oil Drain Extension
- Air Cleaner
- Level 1 Fan and Belt Guards (Open Set Only)
- Stainless Steel Flexible Exhaust Connection
- Factory Filled Oil and Coolant
- Radiator Duct Adapter (Open Set Only)
- Critical Exhaust Silencer (Enclosed Units Only)

FUEL SYSTEM
- Fuel Lockoff Solenoid
- Primary Fuel Filter

COOLING SYSTEM
- Closed Coolant Recovery System
- UV/Ozone Resistant Hoses
- Factory-Installed Radiator
- Radiator Drain Extension
- 50/50 Ethylene Glycol Antifreeze
- 120 VAC Coolant Heater

ELECTRICAL SYSTEM
- Battery Charging Alternator
- Battery Cables
- Battery Tray
- Rubber-Booted Engine Electrical Connections
- Solenoid Activated Starter Motor

ALTERNATOR SYSTEM
- UL2200 GENprotect™
- 12 Leads (3-Phase, Non 600V)
- Class H Insulation Material
- Vented Rotor
- 2/3 Pitch
- Skewed Stator
- Auxiliary Voltage Regulator Power Winding
- Brushless Excitation
- Sealed Bearing
- Automated Manufacturing (Winding, Insertion, Lacing, Varnishing)
- Rotor Dynamically Spin Balanced
- Amortisseur Winding
- Full Load Capacity Alternator
- Protective Thermal Switch

GENERATOR SET
- Internal Genset Vibration Isolation
- Separation of Circuits - High/Low Voltage
- Separation of Circuits - Multiple Breakers
- Wrapped Exhaust Piping
- Standard Factory Testing
- 2 Year Limited Warranty (Standby Rated Units)
- 1 Year Limited Warranty (Prime Rated Units)
- Silencer Mounted in the Discharge Hood (Enclosed Units Only)
- Silencer of Heat Shield

ENCLOSURE (If Selected)
- Rust-Proof Fasteners with Nylon Washers to Protect Finish
- High Performance Sound-Absorbing Material (Sound Attenuated Enclosures)
- Gasketed Doors
- Upward Facing Discharge Hoods (Radiator and Exhaust)
- Stainless Steel Lift Off Door Hinges
- Stainless Steel Lockable Handles
- RhinoCoat™ - Textured Polyester Powder Coat Paint

FUEL TANKS (If Selected)
- UL 142/ULC S601
- Double Wall Construction
- Vents
- Sloped Top
- Sloped Bottom
- Factory Pressure Tested (2 psi)
- Rupture Basin Alarm
- Electronic and Visual Fuel Level Indication
- Check Valve In Supply and Return Lines
- RhinoCoat™ - Textured Polyester Powder Coat Paint
- Stainless Steel Hardware

CONTROL SYSTEM

Digital H Control Panel- Dual 4x20 Display

Program Functions
- Programmable Crank Limiter
- 7-Day Programmable Exerciser
- Special Applications Programmable Logic Controller
- RS-232/485 Communications
- All Phase Sensing Digital Voltage Regulator
- 2-Wire Start Capability
- Date/Time Fault History (Event Log)
- Isochronous Governor Control
- Waterproof/Sealed Connectors
- Audible Alarms and Shutdowns
- Not in Auto (Flashing Light)
- Auto/Off/Manual Switch
- E-Stop (Red Mushroom-Type)
- NFPA110 Level I and II (Programmable)
- Customizable Alarms, Warnings, and Events
- Modbus® Protocol
- Predictive Maintenance Algorithm
- Sealed Boards
- Password Parameter Adjustment Protection
- Single Point Ground
- 16 Channel Remote Trending
- 0.2 msec High Speed Remote Trending
- Alarm Information Automatically Annunciated on the Display

Full System Status Display
- Power Output (kW)
- Power Factor
- kW Hours, Total, and Last Run
- Real/Reactive/Apparent Power
- All Phase AC Voltage
- All Phase Currents
- Oil Pressure
- Coolant Temperature
- Coolant Level
- Engine Speed
- Battery Voltage
- Frequency

Alarms and Warnings
- Oil Pressure
- Coolant Temperature
- Coolant Level
- Engine Overspeed
- Battery Voltage
- Alarms and Warnings Time and Date Stamped
- Snap Shots of Key Operation Parameters During Alarms and Warnings
- Alarms and Warnings Spelled Out (No Alarm Codes)

SD050 | 3.3L | 50 kW
INDUSTRIAL DIESEL GENERATOR SET
EPA Certified Stationary Emergency
GENERAC | INDUSTRIAL POWER

CONFIGURABLE OPTIONS

ENGINE SYSTEM
- Oil Make-Up System
- Oil Heater
- Industrial Exhaust Silencer (Open Set)
- Two-Stage Air Cleaner

FUEL SYSTEM
- Flexible Fuel Lines
- Primary Fuel Filter

ELECTRICAL SYSTEM
- 10A UL Listed Battery Charger
- Battery Warmer

ALTERNATOR SYSTEM
- Alternator Upsizing
- Anti-Condensation Heater
- Tropical Coating
- Permanent Magnet Excitation

GENERATOR SET
- Extended Factory Testing (3-Phase Only)
- 8 Position Load Center

CIRCUIT BREAKER OPTIONS
- Main Line Circuit Breaker
- 2nd Main Line Circuit Breaker
- Shunt Trip and Auxiliary Contact
- Electronic Trip Breakers

ENCLOSURE
- Weather Protected Enclosure
- Level 1 Sound Attenuated
- Level 2 Sound Attenuated
- Level 2 Sound Attenuated with Motorized Dampers
- Steel Enclosure
- Aluminum Enclosure
- Up to 200 MPH Wind Load Rating (Contact Factory for Availability)
- AC/DC Enclosure Lighting Kit
- Door Open Alarm Switch
- Enclosure Heater (with Motorized Dampers Only)

WARRANTY (Standby Gensets Only)
- 2 Year Extended Limited Warranty
- 5 Year Limited Warranty
- 5 Year Extended Limited Warranty
- 7 Year Extended Limited Warranty
- 10 Year Extended Limited Warranty

CONTROL SYSTEM
- NFPA 110 Compliant 21-Light Remote Annunciator
- Remote Relay Assembly (8 or 16)
- Oil Temperature Sender with Alarm
- Remote E-Stop (Break Glass-Type, Surface Mount)
- Remote E-Stop (Red Mushroom-Type, Surface Mount)
- Remote E-Stop (Red Mushroom-Type, Flush Mount)
- Remote Communication - Modem
- 10A Engine Run Relay
- Ground Fault Annunciator

FUEL TANKS (Size On Last Page)
- Electric Fuel Level
- Mechanical Fuel Level
- 8 in (203.2 mm) Fill Extension
- 13 in (330.2 mm) Fill Extension
- 19 in (482.6 mm) Fill Extension

ENGINEERED OPTIONS

ENGINE SYSTEM
- Coolant Heater Ball Valves
- Fluid Containment Pan
- Block Heaters

CONTROL SYSTEM
- Spare Inputs (x4) / Outputs (x4)
- Battery Disconnect Switch

ALTERNATOR SYSTEM
- 3rd Breaker System

GENERATOR SET
- Special Testing
- IBC Seismic Certification

FUEL TANKS
- Overfill Protection Valve
- UL2085 Tank
- Stainless Steel Tanks
- Special Fuel Tanks (MIDEQ and FL DEP/DERM, etc.)
- Vent Extensions

SD050 | 3.3L | 50 kW
INDUSTRIAL DIESEL GENERATOR SET
EPA Certified Stationary Emergency
GENERAC | INDUSTRIAL POWER

APPLICATION AND ENGINEERING DATA

ENGINE SPECIFICATIONS

General

Make	Mitsubishi
Cylinder #	4
Type	In-Line
Displacement - in³ (L)	203.3 (3.331)
Bore - in (mm)	3.7 (94)
Stroke - in (mm)	4.72 (120)
Compression Ratio	19:1
Intake Air Method	Turbocharged/Aftercooled
Cylinder Head	Cast Iron
Ignition	CI
Piston Type	Aluminum

Engine Governing

Governor	Electronic Isochronous
Frequency Regulation (Steady State)	±0.25%

Lubrication System

Oil Pump Type	Gear
Oil Filter Type	Full Flow Cartridge
Crankcase Capacity - qt (L)	11.2 (10.6)

Cooling System

Cooling System Type	Closed Recovery
Fan Type	Pusher
Fan Speed - RPM	2,340
Fan Diameter - in (mm)	20 (508)

Fuel System

Fuel Type	Ultra Low Sulfur Diesel Fuel #2
Fuel Filtering (Microns)	10 Primary and 2 Secondary
Fuel Pump Type	In-Line
Injector Type	Mechanical
Fuel Supply Line - in (mm)	0.31 (7.94) NPT
Fuel Return Line - in (mm)	0.31 (7.94) NPT

Engine Electrical System

System Voltage	12 VDC
Battery Charger Alternator	50 A
Battery Size	See Battery Index 0161970SSV
Battery Voltage	12 VDC
Ground Polarity	Negative

ALTERNATOR SPECIFICATIONS

Standard Model	K0050124Y21
Poles	4
Field Type	Revolving
Insulation Class - Rotor	H
Insulation Class - Stator	H
Total Harmonic Distortion	<5% (3-Phase Only)
Telephone Interference Factor (TIF)	<50
Standard Excitation	Synchronous Brushless
Bearings	Sealed Ball
Coupling	Direct via Flexible Disc
Load Capacity - Standby	100%
Prototype Short Circuit Test	Yes
Voltage Regulator Type	Digital
Number of Sensed Phases	All
Regulation Accuracy (Steady State)	±0.25%

SD050 | 3.3L | 50 kW
INDUSTRIAL DIESEL GENERATOR SET
EPA Certified Stationary Emergency
GENERAC | INDUSTRIAL POWER

OPERATING DATA

POWER RATINGS

	Standby	
Single-Phase 120/240 VAC @1.0pf	50 kW/50 kVA	Amps: 208
Three-Phase 120/208 VAC @0.8pf	50 kW/63 kVA	Amps: 174
Three-Phase 120/240 VAC @0.8pf	50 kW/63 kVA	Amps: 151
Three-Phase 277/480 VAC @0.8pf	50 kW/63 kVA	Amps: 75
Three-Phase 346/600 VAC @0.8pf	50 kW/63 kVA	Amps: 60

MOTOR STARTING CAPABILITIES (sKVA)

skVA vs. Voltage Dip

120/240 VAC 1Ø	30%	277/480 VAC 3Ø	30%	208/240 VAC 3Ø	30%
A0050044N21	31	K0050124Y21	58	K0050124Y21	75
A0050044N21	40	K0050124Y21	124	K0050124Y21	95

FUEL CONSUMPTION RATES*

Fuel Pump Lift - ft (m)
4.5 (1.4)

Total Fuel Pump Flow (Combustion + Return) - gph (Lph)
3.57 (13.51)

Diesel - gph (Lph)

Percent Load	Standby
25%	1.2 (4.5)
50%	2.3 (8.7)
75%	3.4 (12.9)
100%	4.5 (17.0)

* Fuel supply installation must accommodate fuel consumption rates at 100% load.

COOLING

		Standby
Air Flow (Fan Air Flow Across Radiator) - Open Set	cfm (m³/hr)	2,500 (70.8)
Coolant Flow	gpm (Lpm)	34.0 (128.7)
Coolant System Capacity	gal (L)	3.0 (11.4)
Maximum Operating Ambient Temperature	°F (°C)	122 (50)
Maximum Operating Ambient Temperature (Before Derate)		See Bulletin No. 0199270SSD
Maximum Additional Radiator Backpressure	in H_2O (kPa)	0.5 (0.1)

COMBUSTION AIR REQUIREMENTS

	Standby
Flow at Rated Power - cfm (m³/min)	90 (2.5)

ENGINE

		Standby
Rated Engine Speed	RPM	1,800
Horsepower at Rated kW**	hp	83
Piston Speed	ft/min (m/min)	1,416 (431.8)
BMEP	psi (kPa)	118 (814)

EXHAUST

		Standby
Exhaust Flow (Rated Output)	cfm (m³/min)	230 (6.5)
Maximum Allowable Backpressure (Post Silencer)	inHg (kPa)	1.5 (5.1)
Exhaust Temperature (Rated Output)	°F (°C)	900 (482)

** Refer to "Emissions Data Sheet" for maximum bHP for EPA and SCAQMD permitting purposes.

Deration – Operational characteristics consider maximum ambient conditions. Derate factors may apply under atypical site conditions.
Please contact a Generac Power Systems Industrial Dealer for additional details. All performance ratings in accordance with ISO3046, BS5514, ISO8528, and DIN6271 standards.
Standby - See Bulletin 0187500SSB

SD050 | 3.3L | 50 kW
INDUSTRIAL DIESEL GENERATOR SET
EPA Certified Stationary Emergency
GENERAC | INDUSTRIAL POWER

DIMENSIONS AND WEIGHTS*

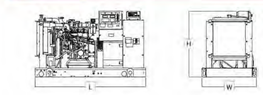

OPEN SET

Run Time - Hours	Usable Capacity - Gal (L)	L x W x H - in (mm)	Weight - lbs (kg)
No Tank	–	76.0 (1,930) x 37.4 (950) x 45.2 (1,148)	1,705 - 1,838 (801 - 834)
12	54 (204)	76.0 (1,930) x 37.4 (950) x 58.2 (1,478)	2,254 - 2,387 (1,019 - 1,082)
29	132 (500)	76.0 (1,930) x 37.4 (950) x 70.2 (1,783)	2,475 - 2,548 (1,123 - 1,158)
42	190 (719)	108.0 (2,892) x 37.4 (950) x 71.2 (1,808)	2,688 - 2,782 (1,221 - 1,264)
46	211 (799)	76.0 (1,930) x 37.4 (950) x 82.2 (2,089)	2,684 - 2,797 (1,218 - 1,251)
66	300 (1,136)	92.9 (2,360) x 37.4 (950) x 88.7 (2,177)	2,747 - 2,820 (1,246 - 1,279)

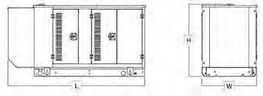

WEATHER PROTECTED ENCLOSURE

Run Time - Hours	Usable Capacity - Gal (L)	L x W x H - in (mm)	Weight - lbs (kg) Enclosure Only: Steel	Weight - lbs (kg) Enclosure Only: Aluminum
No Tank	–	94.8 (2,408) x 38.0 (965) x 49.5 (1,257)		
12	54 (204)	94.8 (2,408) x 38.0 (965) x 62.5 (1,588)		
29	132 (500)	94.8 (2,408) x 38.0 (965) x 74.5 (1,892)	448 (203)	225 (102)
42	190 (719)	108.0 (2,692) x 38.0 (965) x 75.5 (1,917)		
46	211 (799)	94.8 (2,408) x 38.0 (965) x 86.5 (2,197)		
66	300 (1,136)	94.8 (2,408) x 38.0 (965) x 90.0 (2,286)		

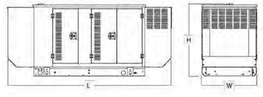

LEVEL 1 SOUND ATTENUATED ENCLOSURE

Run Time - Hours	Usable Capacity - Gal (L)	L x W x H - in (mm)	Weight - lbs (kg) Enclosure Only: Steel	Weight - lbs (kg) Enclosure Only: Aluminum
No Tank	–	112.5 (2,858) x 38.0 (965) x 49.5 (1,257)		
12	54 (204)	112.5 (2,858) x 38.0 (965) x 62.5 (1,588)		
29	132 (500)	112.5 (2,858) x 38.0 (965) x 74.5 (1,892)	527 (239)	259 (117)
42	190 (719)	112.5 (2,858) x 38.0 (965) x 75.5 (1,917)		
46	211 (799)	112.5 (2,858) x 38.0 (965) x 86.5 (2,197)		
66	300 (1,136)	112.5 (2,858) x 38.0 (965) x 90.0 (2,286)		

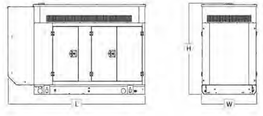

LEVEL 2 SOUND ATTENUATED ENCLOSURE

Run Time - Hours	Usable Capacity - Gal (L)	L x W x H - in (mm)	Weight - lbs (kg) Enclosure Only: Steel	Weight - lbs (kg) Enclosure Only: Aluminum
No Tank	–	94.8 (2,408) x 38.0 (965) x 61.9 (1,572)		
12	54 (204)	94.8 (2,408) x 38.0 (965) x 74.9 (1,903)		
29	132 (500)	94.8 (2,408) x 38.0 (965) x 86.9 (2,207)		
42	190 (719)	108.0 (2,692) x 38.0 (965) x 87.9 (2,232)	617 (280)	323 (147)
46	211 (799)	94.8 (2,408) x 38.0 (965) x 98.9 (2,512)		
66	300 (1,136)	94.8 (2,408) x 38.0 (965) x 102.4 (2,601)		

* All measurements are approximate and for estimation purposes only. Specification characteristics may change without notice. Please contact a Generac Power Systems Industrial Dealer for detailed installation drawings.

Generac Power Systems, Inc. | P.O. Box 8 | Waukesha, WI 53189
P: (262) 544-4811 ©2021 Generac Power Systems, Inc. All rights reserved. All specifications are subject to change without notice.

Part No. A0001193904
Rev. A 01/18/2021

Issued For:

PLACERVILLE SHERIFF

3170 GOLD NUGGET WY,
PLACERVILLE, CA 95667

PREPARED FOR

verizon

2770 SHADELANDS DR, BLDG 11
WALNUT CREEK, CA 94598

Vendor:

EPIC WIRELESS GROUP LLC
Connecting a Wireless World

MDG LOCATION ID:	5000940687
PROJECT ID:	17120113
DRAWN BY:	C. COLSTON
CHECKED BY:	S. SAVIG
APPROVED BY:	J. SPORE

ISSUE STATUS

REV	DATE	DESCRIPTION	CAD
5	05/13/26	CLIENT REV	C.C.
4	02/25/26	PLANNING COMMS	T.T.
3	12/18/25	PLANNING COMMS	S.V.
4	09/30/25	CLIENT REV	S.V.
3	09/25/25	CLIENT REV	T.T.
2	02/12/24	CD 100%	S.D.
1	02/06/24	CLIENT REV	S.D.
0	01/11/24	CD 90%	C.T.C

APPROVED
EL DORADO COUNTY
PLANNING COMMISSION
DATE: May 14, 2026
EXECUTIVE SECRETARY: Karen L. Garner

Licensee:

REGISTERED PROFESSIONAL ENGINEER JAMES R. SPORE S6338 STRUCTURAL STATE OF CALIFORNIA

IT IS A VIOLATION OF LAW FOR ANY PERSON, UNLESS THEY ARE ACTING UNDER THE DIRECTION OF A LICENSED PROFESSIONAL ENGINEER, TO ALTER THIS DOCUMENT.

ENGINEER:

Streamline Engineering and Design, Inc.
3843 Taylor Road, Suite A, Loomis, CA 95650
Contact: Kevin Spore, P.E., S.E. (916-660-1930)
E-Mail: kevin@streamlineeng.com Fax: 916-660-1941

THESE PLANS AND SPECIFICATIONS, AS INSTRUMENTS OF SERVICE, ARE SHALL REMAIN THE PROPERTY OF STREAMLINE ENGINEERING AND DESIGN INC. WHETHER THE PROJECT FOR WHICH THEY ARE MADE IS EXECUTED OR NOT. THESE DRAWINGS AND SPECIFICATIONS SHALL NOT BE USED BY ANY PERSON FOR ANY PURPOSE OTHER THAN THE PROJECT SPECIFIED TO THE ENGINEER. Copyright © 2009, STREAMLINE ENGINEERING AND DESIGN INC. ALL RIGHTS RESERVED

SHEET TITLE:

GENERATOR SPECIFICATIONS

SHEET NUMBER:

A-5.2

0H1490

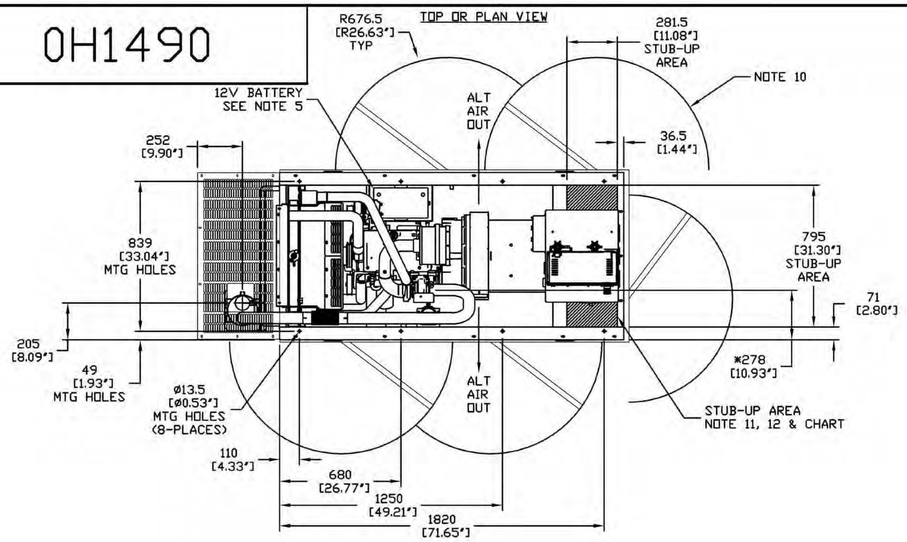

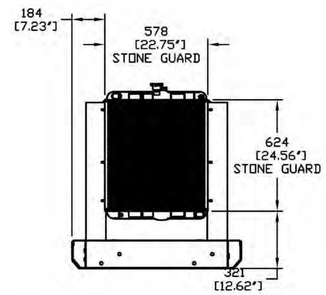

RADIATOR END VIEW WITH STONE GUARD OPTION

RECOMMENDED FUEL/ELECTRICAL STUB-UPS (SEE TOP VIEW)	
DESCRIPTION	INSIDE BASE
AC LOAD LEAD CONDUIT (RIGHT)	A
(LEFT)	A[1]
ADDITIONAL STUB UP AREA FOR 120VAC GFCI OUTLET, (STANDARD BLOCK HEATER, BATTERY CHARGER, AND OTHER 120 VAC OPTIONS).	B

NOTE:
FUEL SYSTEM SET UP WITH OUTSIDE STUB UPS (SEE RIGHT SIDE VIEW). UNITS SOLD WITH OPTIONAL BASE TANK HAVE FUEL SYSTEM PLUMBED TO TANK.

WEIGHT DATA
UNIT: TBD
STEEL COMPARTMENT: TBD

UNITS: mm [INCHES]

ENGINE SERVICE CONNECTIONS

FUEL INLET = 1/4" NPT COUPLING
FUEL RETURN = 1/4" NPT COUPLING
OIL DRAIN = 1/2" NPT COUPLING
EXHAUST OUTLET - EXHAUST MANIFOLDS AS SHOWN ON OPEN SET, 3" OD MUFFLER OUTLET WITH ENCLOSURE

NOTES:

1. CONTROL PANEL MAY BE ROTATED 180° IN EITHER DIRECTION.
2. STANDARD 20A GFCI DUPLEX OUTLET - 120VAC REQUIRED.
3. CONNECTION POINTS FOR CONTROL WIRES PROVIDED IN AC CONNECTION PANEL.
4. EXHAUST MUFFLER SUPPORT BRACKETS SUPPLIED WITH OPTIONAL COMPARTMENT.
5. 12 VOLT NEGATIVE GROUND SYSTEM.
6. 2.5" I.D. FLEX EXHAUST, STANDARD WITH COMPARTMENT UNITS, OPTIONAL WITHOUT.
7. MAIN LINE CIRCUIT BREAKER (MLCB) AND AC LOAD LEAD CONNECTION.
8. REMOVABLE BLANK PANEL FOR OPTIONAL 2nd MAIN LINE CIRCUIT BREAKER.
9. OPTIONAL COMPARTMENT
10. DOORS MUST BE ABLE TO OPEN 90 DEG. TO BE REMOVED.
11. STUB-UPS:
    STANDARD BASE TANK REQUIRES ALL STUB-UPS TO BE OUTSIDE OR IN THE REAR TANK STUB-UP AREA.
12. A OR A[1] IS THE STUB UP AREA UNDER THE MLCB, DEPENDING ON CIRCUIT BREAKER LOCATION. AREA B IS STUB UP AVAILABLE FOR UNITS WITH A BASE TANK.
13. STONE GUARD AND AIR DUCT ADAPTER STANDARD WITH OPEN SET ONLY.
14. SEE DRAWING OC3850 FOR DUCT REMOVAL. REMOVAL OF FRONT DUCT WILL PROVIDE ACCESS TO MUFFLER FOR SERVICING.

*NOTE: DIMENSIONS TO THE CENTER OF EXHAUST FLANGE SHOULD BE USED AS A REFERENCE WHEN EXHAUST SYSTEM IS NOT ORDERED. APPLIES TO OPEN SET ONLY.

PRELIMINARY DRAWING NOT FOR CONSTRUCTION SUBJECT TO CHANGE PRIOR TO MANUFACTURING UNIT

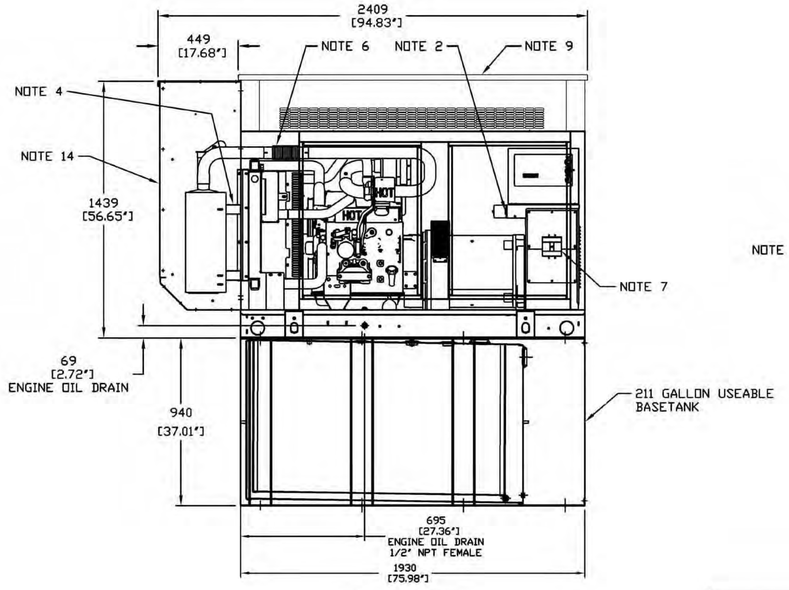

LEFT SIDE VIEW

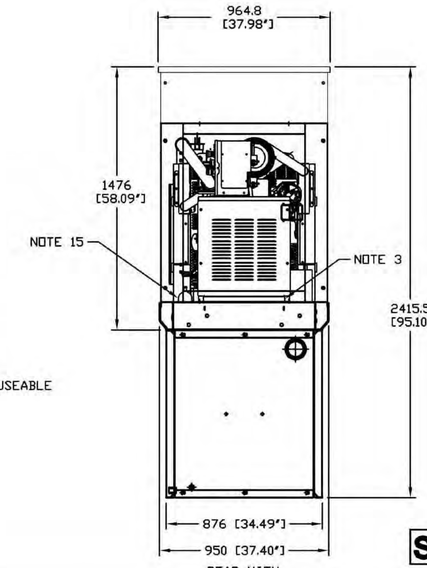

REAR VIEW

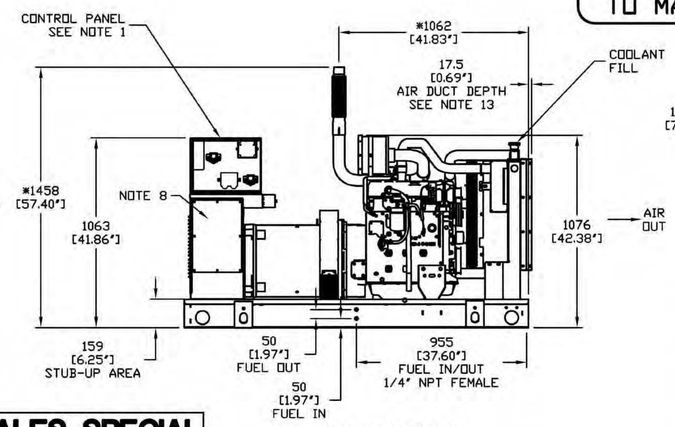

RIGHT SIDE VIEW

SALES SPECIAL

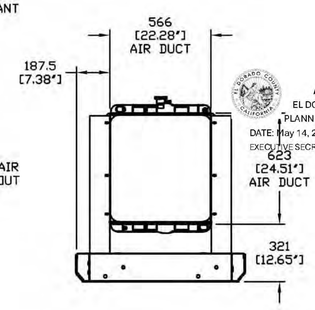

RADIATOR END VIEW WITH AIR DUCT ADAPTER OPTION

APPROVED
EL DORADO COUNTY
PLANNING COMMISSION
DATE: May 14, 2026
EXECUTIVE SECRETARY: Karen L. Garner

GENERAC POWER SYSTEMS OWNS THE COPYRIGHT OF THIS DRAWING WHICH IS SUPPLIED IN CONFIDENCE AND MUST NOT BE USED FOR ANY PURPOSE OTHER THAN FOR WHICH IT IS SUPPLIED WITHOUT THE EXPRESS WRITTEN CONSENT OF GENERAC POWER SYSTEMS.

© GENERAC POWER SYSTEMS 2001

INSTALLATION DRAWING

SD50 G4 2.4L

48 HR RUN TIME W/ TANK SHOWN

LEVEL 2A ENCLOSURE

ISSUE DATE:

GENERAC POWER SYSTEMS
Waukesha
P.O. BOX 8
WAUKESHA, WIS. 53187

FILE NAME	0H1490-A.DWG	SIZE	B
SCALE	NTS	FIRST USE	2.4L G4
DWG NO.	0H1490	REV	A

Issued For:

PLACERVILLE SHERIFF

3170 GOLD NUGGET WY, PLACERVILLE, CA 95667

PREPARED FOR

verizon

2770 SHADELANDS DR, BLDG 11
WALNUT CREEK, CA 94598

Vendor:

EPIC WIRELESS GROUP LLC
Connecting a Wireless World

MDG LOCATION ID:	5000940687
PROJECT ID:	17120113
DRAWN BY:	C. COLSTON
CHECKED BY:	S. SAVIG
APPROVED BY:	J. SPORE

ISSUE STATUS

REV	DATE	DESCRIPTION	CAD
5	05/13/26	CLIENT REV	C.C.
4	02/25/26	PLANNING COMMS	T.T.
3	12/18/25	PLANNING COMMS	S.V.
4	09/30/25	CLIENT REV	S.V.
3	09/25/25	CLIENT REV	T.T.
2	02/12/24	CD 100%	S.D.
1	02/06/24	CLIENT REV	S.D.
0	01/11/24	CD 90%	C.T.C

Licensee:

REGISTERED PROFESSIONAL ENGINEER JAMES R. SPORE S6336 STRUCTURAL STATE OF CALIFORNIA

IT IS A VIOLATION OF LAW FOR ANY PERSON, UNLESS THEY ARE ACTING UNDER THE DIRECTION OF A LICENSED PROFESSIONAL ENGINEER, TO ALTER THIS DOCUMENT.

ENGINEER:

Streamline Engineering and Design, Inc.
3643 Taylor Road, Suite A, Loomis, CA 95650
Contact Kevin Spence, Phone: 916-660-0930
E-Mail: kevin@streamlineeng.com Fax: 916-660-1941

These plans and specifications, as instruments of service, and shall remain the property of Streamline Engineering and Design, Inc. Whether the project for which they are made and published or not. These documents are not to be used by any other person and may not be used for other projects without the written consent of Streamline Engineering and Design, Inc. All rights reserved. Copyright © 2005 Streamline Engineering and Design Inc. All rights reserved.

SHEET TITLE:
GENERATOR SPECIFICATIONS

SHEET NUMBER:
A-5.3

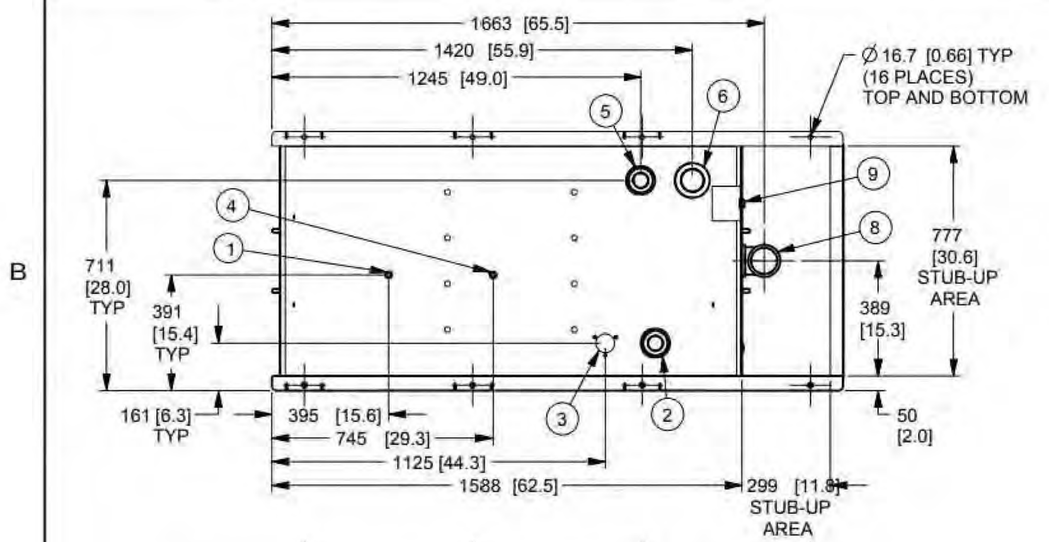

I/N	DESCRIPTION	FUNCTION
1	3/8" NPT COUPLING	FUEL SUPPLY
2	2" NPT WELD FLANGE	FUEL FILL
3	FUEL LEVEL GAUGE	ELECTRONIC SENDER/VISUAL GAUGE
4	3/8" NPT COUPLING	FUEL RETURN
5	2" NPT WELD FLANGE	NORMAL VENT
6	3" NPT WELD FLANGE	INNER TANK EMERGENCY VENT
7	1/2" NPT HALF COUPLING	OUTER TANK LEAK DETECTOR
8	3" NPT STREET ELBOW	OUTER TANK EMERGENCY VENT
9	1/2" NPT HALF COUPLING	FLUID BASIN ALARM

TANK P/N	0J81730ST03
TOTAL CAPACITY	825 [218]
USABLE CAPACITY	795 [210]
DRY WEIGHT	448 [988]

CAPACITY: LITER (GALLONS)
WEIGHT: KILOGRAMS (POUNDS)
DIMENSIONS: MM (INCH)

UL #142 LISTED

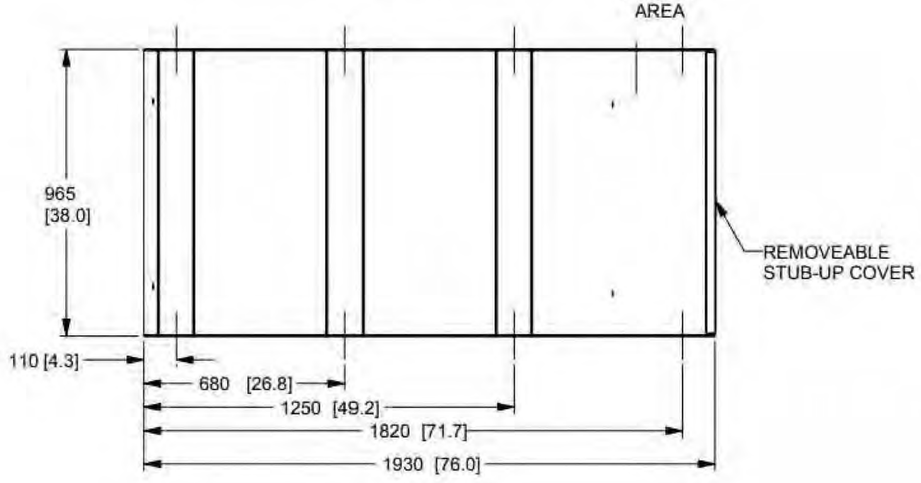

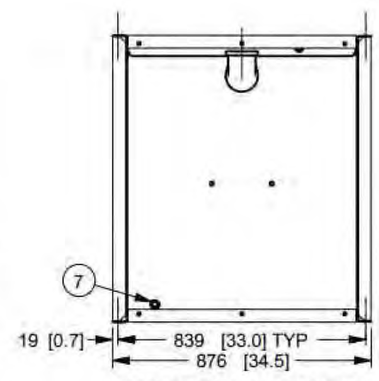

STUB-UP COVER REMOVED
IN THIS VIEW FOR CLARITY

DRAWING CREATED FROM PRO/ENGINEER 3D FILE. ECO MODIFICATION TO BE APPLIED TO SOLID MODEL ONLY.

INSTALLATION DRAWING

GENERAC POWER SYSTEMS OWNS THE COPYRIGHT OF THIS DRAWING WHICH IS SUPPLIED IN CONFIDENCE AND MUST NOT BE USED FOR ANY PURPOSE OTHER THAN FOR WHICH IT IS SUPPLIED WITHOUT THE EXPRESS WRITTEN CONSENT OF GENERAC POWER SYSTEMS.
© GENERAC POWER SYSTEMS 2012

ELECTRONICALLY APPROVED
INSIDE WINDCHILL

LIFECYCLE STATE: Production Released

GENERAC

TITLE
INSTALL BASETANK A-GRP
210 GAL WITH FLUID CONTAINMENT

ISSUE DATE:

SIZE	CAGE NO	DWG NO	REV
B	N/A	0J8971	A

SCALE 0.063 | WT-KG 0.00 | SHEET 1 of 1

Issued For:

PLACERVILLE SHERIFF

3170 GOLD NUGGET WY,
PLACERVILLE, CA 95667

PREPARED FOR

verizon

2770 SHADELANDS DR, BLDG 11
WALNUT CREEK, CA 94598

Vendor:

EPIC WIRELESS GROUP LLC
Connecting a Wireless World

MDG LOCATION ID:	5000940687
PROJECT ID:	17120113
DRAWN BY:	C. COLSTON
CHECKED BY:	S. SAVIG
APPROVED BY:	J. SPORE

ISSUE STATUS

REV	DATE	DESCRIPTION	CAD
3	05/13/26	CLIENT REV	C.C.
2	02/25/26	PLANNING COMMS	T.T.
1	12/18/25	PLANNING COMMS	S.V.
4	09/30/25	CLIENT REV	S.V.
3	09/25/25	CLIENT REV	T.T.
2	02/12/24	CD 100%	S.D.
1	02/06/24	CLIENT REV	S.D.
0	01/11/24	CD 90%	C.T.C

APPROVED
EL DORADO COUNTY
PLANNING COMMISSION
DATE: May 14, 2026
EXECUTIVE SECRETARY: Karen L. Garner

Licensee:

REGISTERED PROFESSIONAL ENGINEER
JAMES R. SPORE
S6336
STRUCTURAL
STATE OF CALIFORNIA

IT IS A VIOLATION OF LAW FOR ANY PERSON, UNLESS THEY ARE ACTING UNDER THE DIRECTION OF A LICENSED PROFESSIONAL ENGINEER, TO ALTER THIS DOCUMENT.

ENGINEER:

Streamline Engineering and Design, Inc.
3643 Taylor Road, Suite A, Loomis, CA 95650
Contact: Kevin Robertson, Phone: 916-660-1930
E-Mail: kevin@streamlineeng.com Fax: 916-660-1941

THESE PLANS AND SPECIFICATIONS, AS INSTRUMENTS OF SERVICE, ARE AND SHALL REMAIN THE PROPERTY OF STREAMLINE ENGINEERING AND DESIGN INC. WHEN THE PURPOSE FOR WHICH THEY WERE MADE HAS BEEN FULFILLED. THESE DRAWINGS AND SPECIFICATIONS SHALL NOT BE USED BY ANYONE ON OTHER PROJECTS, EXCEPT BY AGREEMENT WITH STREAMLINE ENGINEERING AND DESIGN INC. Copyright © 2006, STREAMLINE ENGINEERING AND DESIGN INC. ALL RIGHTS RESERVED.

SHEET TITLE:
GENERATOR SPECIFICATIONS

SHEET NUMBER:
A-5.4

Clay & Bailey Mfg. Co.

A CENTURY'S WORTH OF INNOVATION

366 Female Thread High Flow Emergency Vent for Aboveground Storage Tanks

366 HF

Features:

All Aluminum Construction is lightweight for easy handling and installation. Also, no rust issues from scratches or weathering. Buna-N O Ring provides a vapor resistant seal. Spring Actuated Vent assures accurate opening pressure. Pressure relief set at <0.5 PSI. Clay & Bailey vents can be used in a variety of Aboveground Storage Tank Equipment installations where reliable fuel handling petroleum equipment is required.

Part #	Size	Weight /lbs.	Airflow Size	W/Screen	W/O Screen
0366-03-30HF	3"	3	3"	66,400 SCFH	71,750 SCFH
0366-03-40HF	4"	4	4"	114,800 SCFH	118,750 SCFH
0366-03-50HF	5"	5	5"	184,500 SCFH	200,250 SCFH
0366-03-60HF	6"	6	6"	237,000 SCFH	251,700 SCFH
0366-03-80HF	8"	7	8"	500,552 SCFH	531,289 SCFH

c UL US LISTED

Clay & Bailey emergency vents comply with various codes – Petroleum Equipment Institute PEI RP200; Underwriters Laboratories Inc. UL-142, UL-2085, UL-2244, UL-2583; Underwriters Laboratories of Canada ULC-S601; National Fire Protection Agency NFPA 30, NFPA 30A; American Petroleum Institute API 2000.

Patent # 8171955

10/2018

6401 E. 40th St., Kansas City, Mo. 64129 • 1-800-821-6583 • F: 816-924-3903 • www.claybailey.com

Clay & Bailey Mfg. Co.

A CENTURY'S WORTH OF INNOVATION

401
Mushroom Vent

401

Features:

Mushroom style free flow vent is made of cast iron with a 8 mesh galvanized screen. Domed vent top prevents tank contamination from entering vent lines. NPT thread is standard. Also available in galvanized. (Shown)

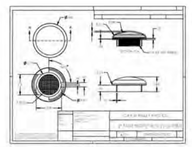

Cast iron Black

Part No.	Size	lbs	SCFH@ 2.5psi	A	B
0401-01-0750	3/4"	0.3	4,894	3/4"	1"
0401-01-1000	1"	0 5	8,711	1"	1 1/8"
0401-01-1250	1 1/4"	0.6	13,616	1 1/4"	1 1/2"
0401-01-1500	1 1/2"	0.7	19,532	1 1/2"	1 9/16"
0401-01-2000	2"	1.1	38,846	2"	1 11/16"
0401-01-4000	4"	2.5	54,873	4"	3"

Galvanized

Part No.	Size	lbs	2.5psi	A	B
0401-10-0750	3/4"	0.3	4,894	3/4"	1"
0401-10-1000	1"	0 5	8,711	1"	1 1/8"
0401-10-1250	1 1/4"	0.6	13,616	1 1/4"	1 1/2"
0401-10-1500	1 1/2"	0.7	19,532	1 1/2"	1 9/16"
0401-10-2000	2"	1.1	38,846	2"	1 11/16"
0401-10-4000	4"	2.5	54.873	4"	3"

6401 E. 40th St., Kansas City, Mo. 64129 • 1-800-821-6583 • F: 816-924-3903 • www.claybailey.com

NOTE:
FILL PIPE SHALL TERMINATE WITHIN 6" OF TANK BOTTOM

ITEM	PART #	QTY	DESCRIPTION
1	ES1011	1	STD 2" STEEL NIPPLE 3" LONG
2	ES1022	1	TUBE, 16 GA 2" OD ELEC WELD STD
3	ES1023	1	FILLER NECK FEMALE COUPLING 2" STD
4	ES1024	1	STD FILLER CAP 2-1/4" OD ELECT WELD STD

NOTE:
THREADS MUST BE FREE OF WELD

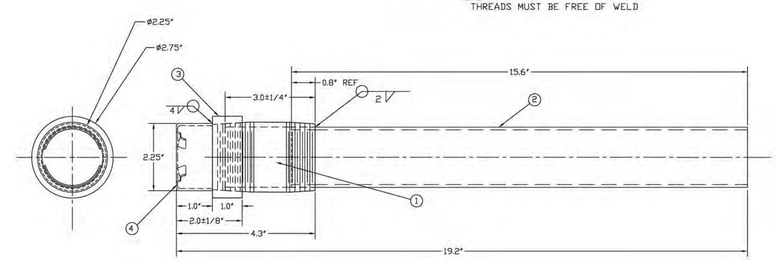

FUEL FILL NECK
376 MM [14.8"] IN TANK

ENERGY SYSTEMS
PH: 209-870-1900
FAX: 209-870-1950
ENERGY SYSTEMS
7100 S. LONGE STREET, SUITE 300
STOCKTON, CA. 95206

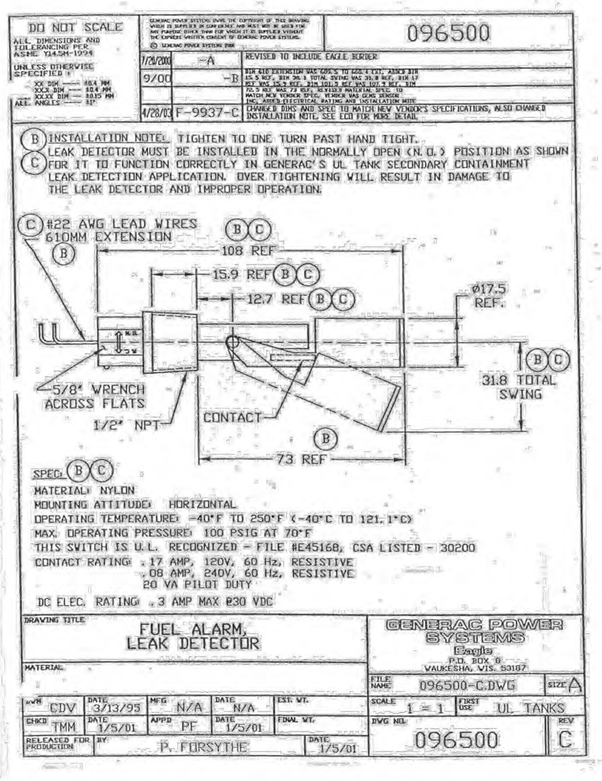

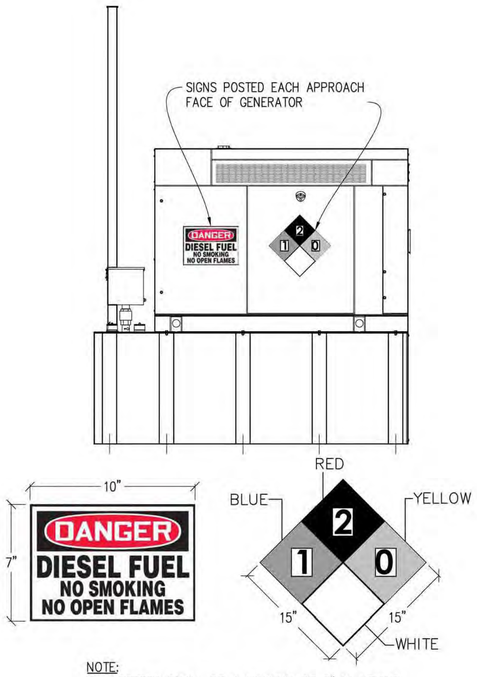

NOTE:
1. LETTERS SHALL BE A MINIMUM OF 3" IN HEIGHT
2. SIGN TO BE PLACED ON ALL SIDES OF GENERATOR
3. 10"x14" ALUMINUM NO SMOKING SIGN

1 GENERATOR SAFTEY SIGNAGE
NOT TO SCALE

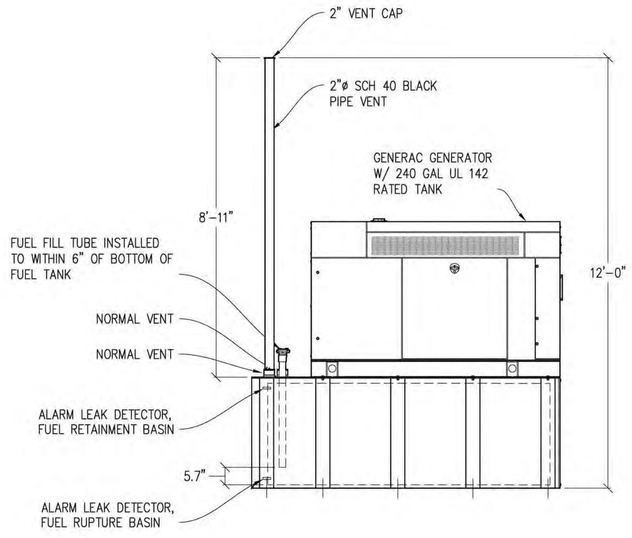

2 GENERATOR VENT & FILL DETAIL
½"=1'-0"

APPROVED
EL DORADO COUNTY
PLANNING COMMISSION
DATE: May 14, 2026
EXECUTIVE SECRETARY: Karen L. Garner

Issued For:

PLACERVILLE SHERIFF

3170 GOLD NUGGET WY,
PLACERVILLE, CA 95667

PREPARED FOR

verizon

2770 SHADELANDS DR, BLDG 11
WALNUT CREEK, CA 94598

Vendor:

EPIC WIRELESS GROUP LLC
Connecting a Wireless World

MDG LOCATION ID:	5000940687
PROJECT ID:	17120113
DRAWN BY:	C. COLSTON
CHECKED BY:	S. SAVIG
APPROVED BY:	J. SPORE

ISSUE STATUS

REV	DATE	DESCRIPTION	CAD
3	05/13/26	CLIENT REV	C.C.
2	02/25/26	PLANNING COMMS	T.T.
1	12/18/25	PLANNING COMMS	S.V.
4	09/30/25	CLIENT REV	S.V.
3	09/25/25	CLIENT REV	T.T.
2	02/12/24	CD 100%	S.D.
1	02/06/24	CLIENT REV	S.D.
0	01/11/24	CD 90%	C.T.C

Licensee:

REGISTERED PROFESSIONAL ENGINEER JAMES R. SPORE S6336 STRUCTURAL STATE OF CALIFORNIA

IT IS A VIOLATION OF LAW FOR ANY PERSON, UNLESS THEY ARE ACTING UNDER THE DIRECTION OF A LICENSED PROFESSIONAL ENGINEER, TO ALTER THIS DOCUMENT.

ENGINEER:

Streamline Engineering and Design, Inc.
3849 Taylor Road, Suite A, Loomis CA 95650
Contact: Kevin Sweeney Phone: 916-660-1930
E-Mail: kevin@streamlineeng.com Fax: 916-660-1941

THESE PLANS AND SPECIFICATIONS AS INSTRUMENTS OF SERVICE, ARE AND SHALL REMAIN THE PROPERTY OF STREAMLINE ENGINEERING AND DESIGN INC. WHEN THE PURPOSE FOR WHICH THEY WERE PREPARED HAS BEEN FULFILLED. THESE PLANS AND SPECIFICATIONS MAY NOT BE USED FOR OTHER WORK AND ARE EXPECTED TO BE RETURNED UPON REQUEST. THESE DRAWINGS AND SPECIFICATIONS SHALL NOT BE USED BY ANY PERSON OR ENTITY FOR ANY PURPOSE UNRELATED TO THE PROJECT WITHOUT THE WRITTEN CONSENT OF STREAMLINE ENGINEERING AND DESIGN INC. ALL RIGHTS RESERVED.
Copyright © 2005, STREAMLINE ENGINEERING AND DESIGN INC.

SHEET TITLE:

GENERATOR SPECIFICATIONS

SHEET NUMBER:

A-5.5

GROUP H

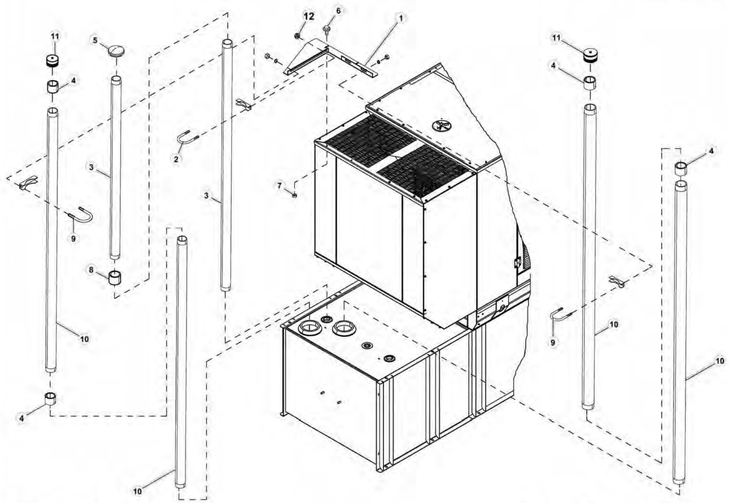

Revision : CN-0019649-W
Date : 9/4/18

Page 1 of 2

Exploded View : EV VENT EXT AGRP 2"3 ATT
Drawing No. : 0K9817A

EXPLODED VIEW: EV VENT EXT AGRP 2"3 ATT
DRAWING #:0K9817A

GROUP H

ITEM	PART#	QTY.	DESCRIPTION
(1)1	0G3036YST0R	1	BRACKET VENT EXT AGRP 2"3 ATT
2	0C7947	1	KIT, SADDLE AND BOLT 2 1/2"
3	0G3045	2	PIPE 2"VENT EXTENSION 72"LG
4	10000016676	4	COUPLING PIPE 3 ZINC
5	G021178	1	VENT OEM 2"
6	0C2454B	2	SCREW HWHT M6-1 X 30 W/MKS
7	G049813	2	NUT HEX M6-1.0 G8 CLEAR ZINC
8	068640B	1	COUPLING FULL 2-11.5 BLACK
9	0E4264	2	BOLT U 3/8-16 X 3.50" W/SADDLE
10	0H1454	4	PIPE NIPPLE 3"X72" SCH40 PNTBK
11	072989J	2	VENT CAP EMERG 3"NPT
12	G064101	2	NUT HEX FL WHIZ 3/8-16

NOTES (UNLESS OTHERWISE SPECIFIED)
(1) SHEET METAL PARTS LISTED IN THE BOM TABLE ARE REPRESENTING CENERIC PARTS (NO COLOR).
* MANUFACTURING: FOR CORRECT MATERIAL AND COLOR REFER TO AS400 BOM.
* CUSTOMER: WHEN ORDERING REPLACEMENT PARTS, ENTER BASE NUMBER (FIRST 6 DIGITS ONLY) IN THE SYSTEM FOR CORRECT MATERIAL AND COLOR. (FOR REFERENCE SEE GUIDELINE 0H7169).

REVISION: CN-0019649-W
DATE: 9/5/18

Page 2 of 2

DO NOT SCALE
ALL DIMENSIONS AND TOLERANCING PER ASME Y14.5M-1994
UNLESS OTHERWISE SPECIFIED
ALL XX DIM ——— ±1.00
ALL XXX DIM ——— ±1.00
ALL ANGLES ——— ±1°
ALL MACHINED HOLES – ±0.08
ALL PROFILED HOLES – ±0.08

GENERAC POWER SYSTEMS HAS THE COPYRIGHT OF THIS DRAWING WHICH IS SUPPLIED IN CONFIDENCE AND MAY NOT BE USED FOR ANY PURPOSE OTHER THAN THAT FOR WHICH IT IS LOANED. THE COPYRIGHT NOTICE CONSIST OF GENERAC POWER SYSTEMS © GENERAC POWER SYSTEMS INC.

S-327

SHEET 1 OF 2

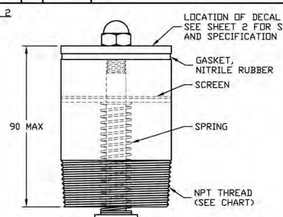

PART #	THREAD (NPT)	OPENING PRESSURE (PSIG)	FULL OPEN PRESSURE (PSIG)	MAX FLOW (SCFH)
072989H	2"	.5	2.5	31600
072989J	3"	.5	2.5	63200
0A1380	4"	.5	2.5	105000
072989L	5"	.5	2.5	190000
072989M	6"	.5	2.5	265000

FINISH: EMERGENCY VENT CAPS TO BE POWDER COATED SEMI-GLOSS BLACK
VENDOR: CR INDUSTRIES OR ENG. APPROVED EQUIVALENT

DRAWING TITLE: VENT CAPS, EMERGENCY
MATERIAL: STEEL
GENERAC POWER SYSTEMS, Beaglin, P.O. BOX 8, WAUKESHA, WIS. 53187
FILE NAME: S-327.DWG SIZE A
DWN JRS DATE 1/2/03 NFG NA DATE NA EST. VT.
CHKD TMM DATE 3/3/03 APPD AG DATE 3/7/03 FINAL VT.
SCALE N.T.S. FIRST USE
DWG NO. S-327 REV
RELEASED FOR PRODUCTION BY A GILLETTE DATE 3/7/03

DO NOT SCALE
ALL DIMENSIONS AND TOLERANCING PER ASME Y14.5M-1994
UNLESS OTHERWISE SPECIFIED
ALL XX DIM ——— ±1.00
ALL XXX DIM ——— ±0.25
ALL ANGLES ——— ±1°
ALL MACHINED HOLES – ±0.08
ALL PROFILED HOLES – ±0.08

GENERAC POWER SYSTEMS HAS THE COPYRIGHT OF THIS DRAWING WHICH IS SUPPLIED IN CONFIDENCE AND MAY NOT BE USED FOR ANY PURPOSE OTHER THAN THAT FOR WHICH IT IS LOANED. THE COPYRIGHT NOTICE CONSIST OF GENERAC POWER SYSTEMS © GENERAC POWER SYSTEMS INC.

S-327

DECAL SHAPE "A"

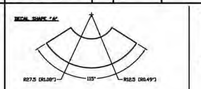

DECAL SHAPE "B"

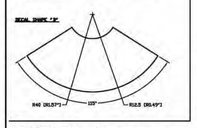

DECAL MATERIAL SPECIFICATION:
REFLECTIVE TRANSFER FILM, WITH WHITE LABEL PRODUCTS, INCO FRONTSTAR - A 4 MIL ALUMI SILVER PAS TRANSFER FILM WITH A 2 MIL CLEAR ACRYLIC ADHESIVE - A 5 MIL VINYL FACE
CLEAR - A 5 MIL VINYL FACE
OR ENG. APPROVED EQUIVALENT

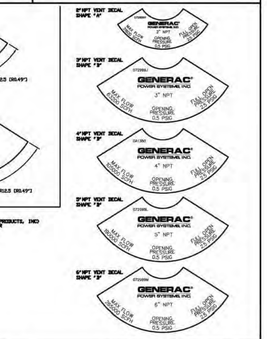

SHEET 2 OF 2

DRAWING TITLE: VENT CAPS, EMERGENCY
MATERIAL: STEEL
GENERAC POWER SYSTEMS, Beaglin, P.O. BOX 8, WAUKESHA, WIS. 53187
FILE NAME: S-327.DWG SIZE A
DWN JRS DATE 1/2/03 NFG NA DATE NA EST. VT.
CHKD TMM DATE 3/3/03 APPD AG DATE 3/7/03 FINAL VT.
SCALE N.T.S. FIRST USE
DWG NO. S-327 REV
RELEASED FOR PRODUCTION BY A GILLETTE DATE 3/7/03

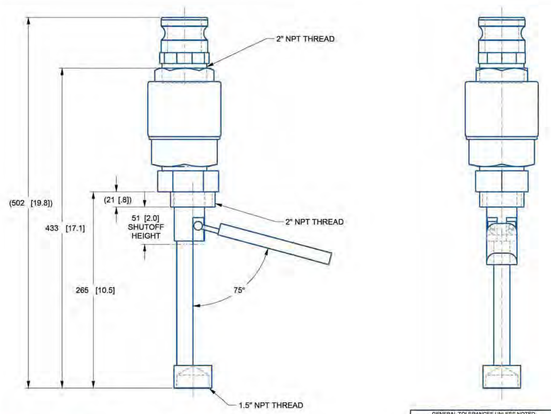

DRAWING CREATED FROM PROENGINEER 3D FILE. ECO MODIFICATION TO BE APPLIED TO SOLID MODEL ONLY

NOTE:
1. MORRISON BROTHERS PART NUMBER 9095DS-0200 AV.
2. DIMENSIONS ARE IN MILLIMETERS [INCHES].

REV	DATE	DESCRIPTION
- A -		RELEASED FOR PRODUCTION

GENERAL TOLERANCES UNLESS NOTED
ALL XX ± 0.4 MM
XXX ± 0.4 MM
ALL ANGLES ± 0.25 MM
THIRD ANGLE PROJECTION

GENERAC

TITLE: VALVE OVERFILL PREV. 9095DS

APPROVALS — DATE
DRAWN BY: MRD 11/20/17
ALL APPROVALS ELECTRONICALLY STORED INSIDE WINDCHILL.
UPDATED STATE: Production Released (77)
PRINT DIM: 22.40 1

MATERIAL: SEE_ABOVE; GENERAC MATL SPECIFICATION: AS ABOVE; PAINT SURFACE FINISH:
SIZE B; CAGE NO: N/A; DWG NO: 10000027100; REV: A
SCALE 0.375; WT KG 0.00; SHEET 1 of 1

EXPLODED VIEW: EV KIT 5GAL OPV W/DROP TUBE 2FT
DRAWING #: 10000027286

GROUP H

ITEM	PART#	QTY.	DESCRIPTION
1	10000027100	1	VALVE OVERFILL PREV. 9095DS
2	0G4085	1	DUST CAP 2" TIGHT FILL
3	0C1639	1	NIPPLE TOE 1.5NPT36.5 BLK IRON
(1)4	0J7600	REF	ADPTR FUEL FILL 2"NPT MALE ALM

NOTES:
(1) ITEM INCLUDED WITH 10000027100

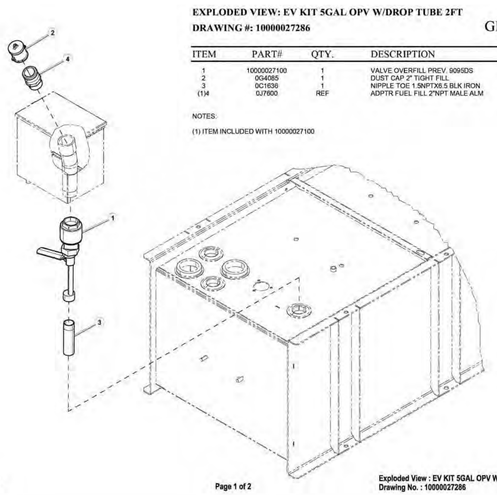

Revision : - A -
Date : 12/04/17

Page 1 of 2

Exploded View : EV KIT 5GAL OPV W/ DROP TUBE 2FT
Drawing No. : 10000027286

OF2908$

ITEM	QTY	DESCRIPTION
1	0G7165C	1 LED VEL WITH HOLDER
2	0F0099A	1 DECAL ALARM HORN RESET
3	0F0099B	1 DECAL ALARM HORN TEST
4	0F0099C	1 DECAL 90% FUEL LEVEL ALARM
5	0F2904	1 SWITCH,TOGGLE DPDT MOMENTARY
6	0F2905	1 BOOT TOGGLE SWITCH 15/32-32UNF
7	0F2906	1 DECL HORN 3P 87a 4"W 4"H
8	0F3413	1 COVER,REMOTE ALARM 90% FUEL
9	0F4254	1 HARNESS, REMOTE ALARM 90% FUEL (NOT SHOWN)
10	0E5637	1 RELAY PNL 12VDC DPDT 10AMP@240VA
	0E5767	1 RELAY PNL 24VDC DPDT 10A
(E) 11	0C3003	1 PB,20 60/20A PANEL MNT
12	0B0015	1 FITTING CONDUIT BOD 3/8"
13	0F1809	2" FOAM TAPE 1"X30YD VHB

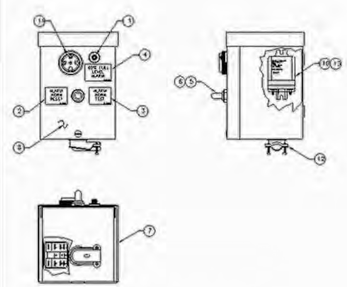

PART #	DESCRIPTION
0F2908	ASSY,REMOTE ALARM 90 % FUEL 12V
0F2908A	ASSY REMOTE ALARM 90 % FUEL 24V

DO NOT SCALE
ALL DIMENSIONS ARE IN MILLIMETERS UNLESS OTHERWISE SPECIFIED
ALL ANGLES ±1°
ALL XX DIM ±0.4
ALL XXX DIM ±0.25
ALL MACHINED HOLES ±0.4

ASSEMBLY, REMOTE ALARM 90% FUEL
GENERAC POWER SYSTEMS INC. Beaglin P.O. BOX 8 WAUKESHA, WI. 53187
DWN PEL 03/18/04; CHKD RCA 03/18/04; APPD BCB 03/18/04; RELEASED BY B. BARD 03/18/04
SIZE A; CAGE CODE 0KZ01; SCALE 1 = 1; DWG NO OF2908$; REV E
SHEET 1 OF 1

APPROVED
EL DORADO COUNTY
PLANNING COMMISSION
DATE: May 14, 2026
EXECUTIVE SECRETARY: Karen L. Garner

Issued For:

PLACERVILLE SHERIFF

3170 GOLD NUGGET WY,
PLACERVILLE, CA 95667

PREPARED FOR

verizon

2770 SHADELANDS DR, BLDG 11
WALNUT CREEK, CA 94598

Vendor:

EPIC WIRELESS GROUP LLC
Connecting a Wireless World

MDG LOCATION ID:	5000940687
PROJECT ID:	17120113
DRAWN BY:	C. COLSTON
CHECKED BY:	S. SAVIG
APPROVED BY:	J. SPORE

ISSUE STATUS

REV	DATE	DESCRIPTION	CAD
3	05/13/26	CLIENT REV	C.C.
2	02/25/26	PLANNING COMMS	T.T.
1	12/18/25	PLANNING COMMS	S.V.
4	09/30/25	CLIENT REV	S.V.
3	09/25/25	CLIENT REV	T.T.
2	02/12/24	CD 100%	S.D.
1	02/06/24	CLIENT REV	S.D.
0	01/11/24	CD 90%	C.T.C

Licensee:

REGISTERED PROFESSIONAL ENGINEER JAMES R. SPONE S6336 STRUCTURAL STATE OF CALIFORNIA

IT IS A VIOLATION OF LAW FOR ANY PERSON, UNLESS THEY ARE ACTING UNDER THE DIRECTION OF A LICENSED PROFESSIONAL ENGINEER, TO ALTER THIS DOCUMENT.

ENGINEER:

Streamline Engineering and Design, Inc.
3643 Taylor Road, Suite A, Loomis, CA 95650
Contact: Kevin Sorenson Phone: 916-660-1930
E-Mail: kevin@streamlineeng.com Fax: 916-660-1941

THESE PLANS AND SPECIFICATIONS, AS INSTRUMENTS OF SERVICE, ARE AND SHALL REMAIN THE PROPERTY OF STREAMLINE ENGINEERING AND DESIGN, INC. WHEN THEY HAVE BEEN PRESENTED FOR REVIEW THEY ARE MADE AND EXECUTED FOR HIRE. THESE DRAWINGS AND SPECIFICATIONS SHALL NOT BE USED FOR ANY PURPOSE OTHER THAN THE PROJECT SPECIFIED ON THE DRAWINGS WITHOUT THE WRITTEN CONSENT OF STREAMLINE ENGINEERING AND DESIGN INC. ALL RIGHTS RESERVED. Copyright © 2005, STREAMLINE ENGINEERING AND DESIGN INC. ALL RIGHTS RESERVED.

SHEET TITLE:
GENERATOR SPECIFICATIONS

SHEET NUMBER:
A-5.6

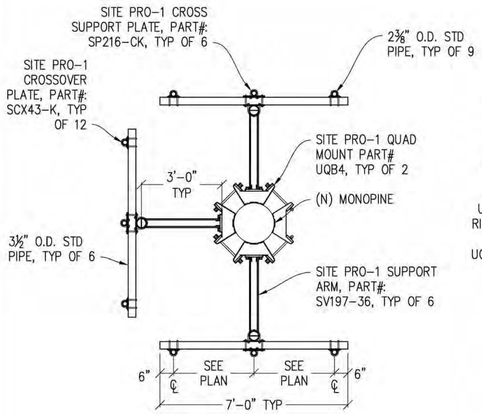

PLAN VIEW

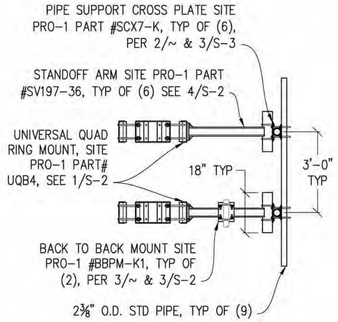

SIDE VIEW

1 T-ARM ANTENNA MOUNT

⅜"=1'-0"

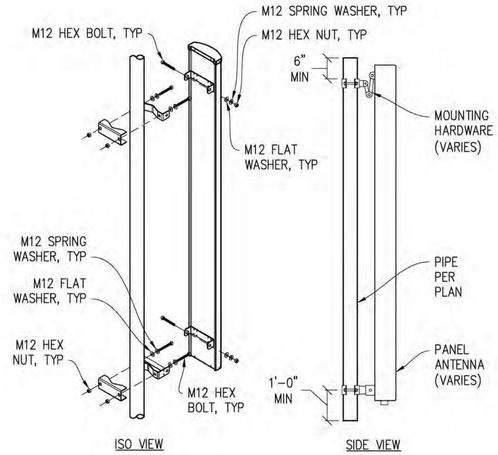

ISO VIEW SIDE VIEW

2 ANTENNA MOUNT

1"=1'-0"

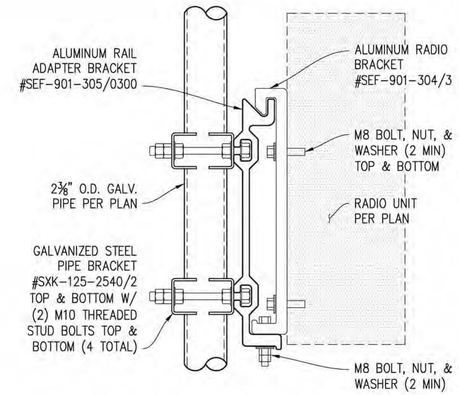

3 RADIO UNIT MOUNTING

3"=1'-0"

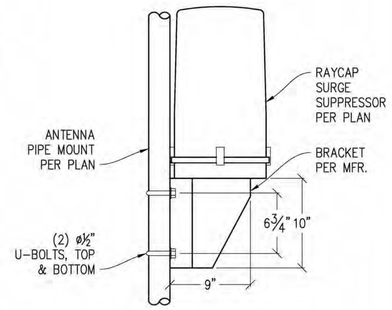

4 SURGE PIPE MOUNT

1½"=1'-0"

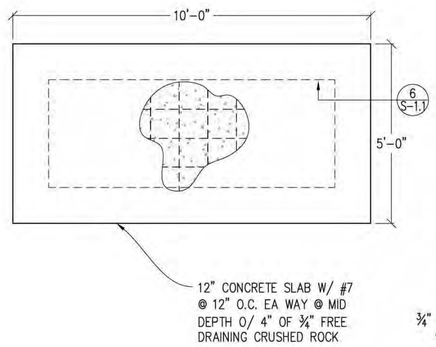

5 CONC. SLAB DETAIL

½"=1'-0" @ GENERATOR

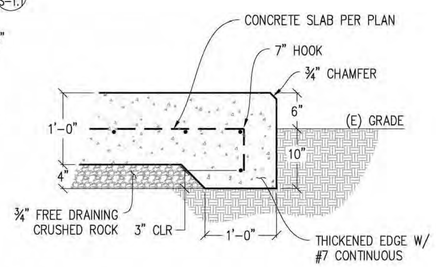

6 THICKENED EDGE SLAB

1"=1'-0"

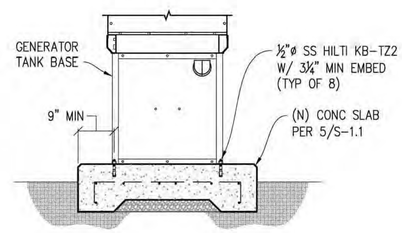

7 GENERATOR ANCHORAGE

½"=1'-0"

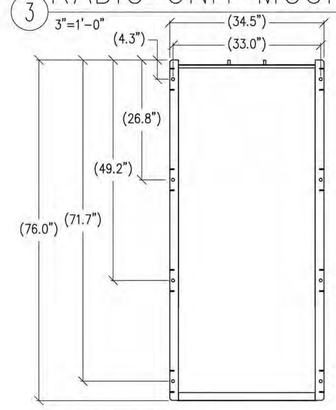

GENERATOR ANCHOR LOCATIONS

8

¾"=1'-0"

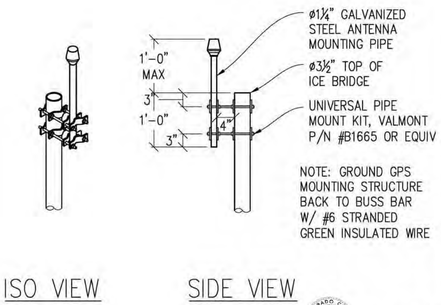

ISO VIEW SIDE VIEW

9 GPS MOUNT DETAIL

¾"=1'-0"

APPROVED
EL DORADO COUNTY
PLANNING COMMISSION
DATE: May 14, 2026
EXECUTIVE SECRETARY: Karen L. Garner

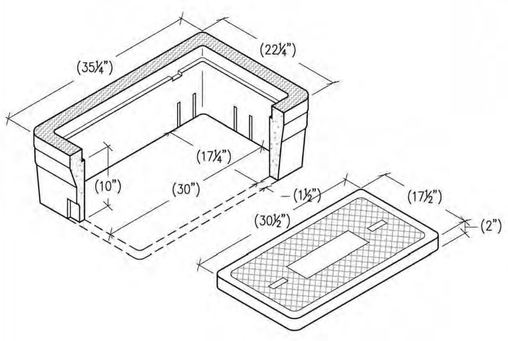

10 P36 SPLICE BOX

1"=1'

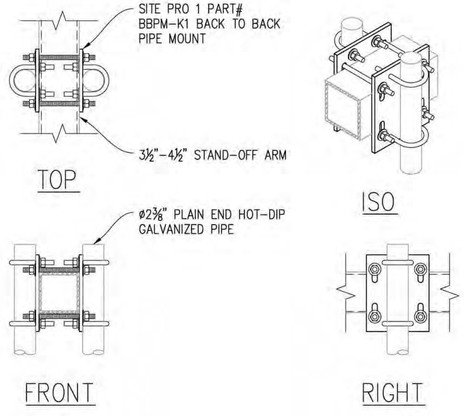

11 BACK TO BACK PIPE MOUNT

1½"=1'-0"

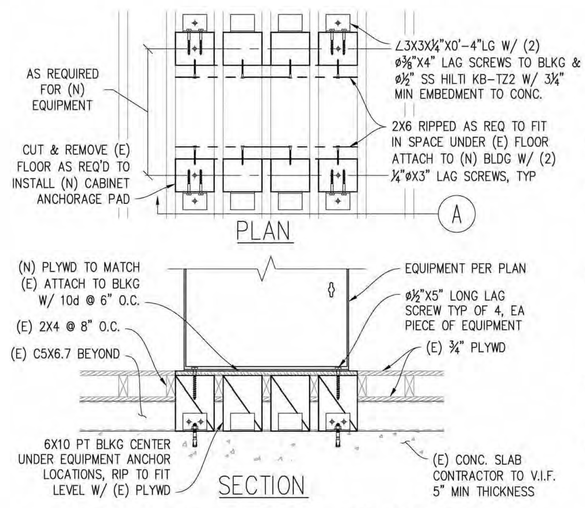

12 CABINET FLOOR BLKG DETAIL

1"=1'-0"

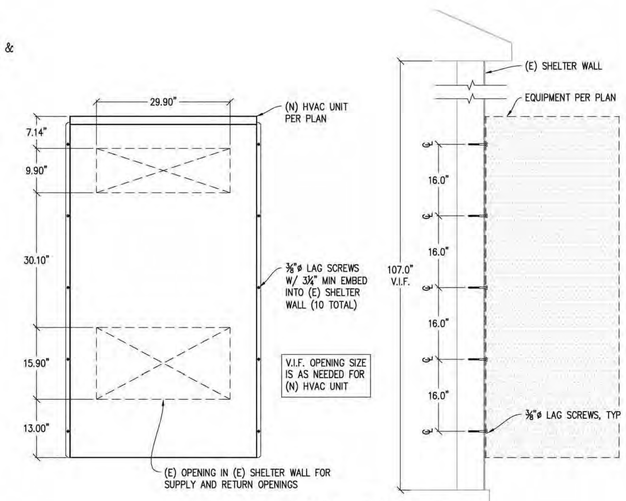

13 HVAC WALL MOUNT

1"=1'-0"

Issued For:

PLACERVILLE SHERIFF

3170 GOLD NUGGET WY, PLACERVILLE, CA 95667

PREPARED FOR

verizon

2770 SHADELANDS DR, BLDG 11
WALNUT CREEK, CA 95598

Vendor:

EPIC WIRELESS GROUP LLC
Connecting a Wireless World

MDG LOCATION ID:	5000940687
PROJECT ID:	17120113
DRAWN BY:	C. COLSTON
CHECKED BY:	S. SAVIG
APPROVED BY:	J. SPORE

ISSUE STATUS

REV	DATE	DESCRIPTION	CAD
5	05/13/26	CLIENT REV	C.C.
4	02/25/26	PLANNING COMMS	T.T.
3	12/18/25	PLANNING COMMS	S.V.
2	09/30/25	CLIENT REV	S.V.
1	09/25/25	CLIENT REV	T.T.
0	02/12/24	CD 100%	S.D.
	02/06/24	CLIENT REV	S.D.
	01/11/24	CD 90%	C.T.C

Licensee:

REGISTERED PROFESSIONAL ENGINEER JAMES R. SPORE S6336 STRUCTURAL STATE OF CALIFORNIA

IT IS A VIOLATION OF LAW FOR ANY PERSON, UNLESS THEY ARE ACTING UNDER THE DIRECTION OF A LICENSED PROFESSIONAL ENGINEER, TO ALTER THIS DOCUMENT.

ENGINEER:

Streamline Engineering and Design, Inc.
3643 Taylor Road, Suite A, Loomis CA 95650
Contact: Kevin Sorensen, Phone: 916-660-1930
E-Mail: kevin@streamlineeng.com Fax: 916-660-1941

THESE PLANS AND SPECIFICATIONS, AS INSTRUMENTS OF SERVICE, ARE AND SHALL REMAIN THE PROPERTY OF STREAMLINE ENGINEERING AND DESIGN INC. THE REPRODUCTION, ALTERATION OR USE FOR ANY PURPOSE OTHER THAN THOSE AUTHORIZED BY STREAMLINE ENGINEERING AND DESIGN INC. IS FORBIDDEN. THESE DRAWINGS AND SPECIFICATIONS SHALL NOT BE USED FOR ANY PURPOSE NOT SPECIFIED IN WRITING BY STREAMLINE ENGINEERING AND DESIGN INC. WITHOUT THE WRITTEN PERMISSION OF STREAMLINE ENGINEERING AND DESIGN INC. Copyright © 2025, STREAMLINE ENGINEERING AND DESIGN INC. ALL RIGHTS RESERVED.

SHEET TITLE:

STRUCTURAL DETAILS

SHEET NUMBER:

S-1.1

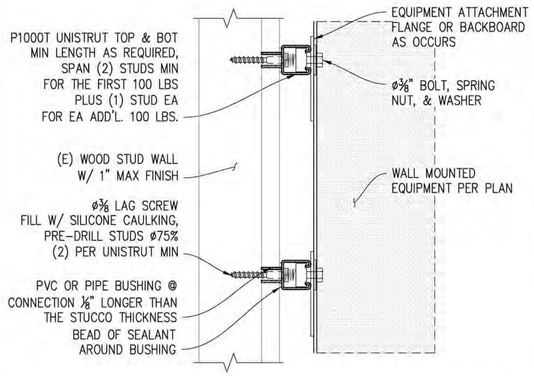

1 EQUIPMENT MOUNTING DETAIL
3"=1'-0"

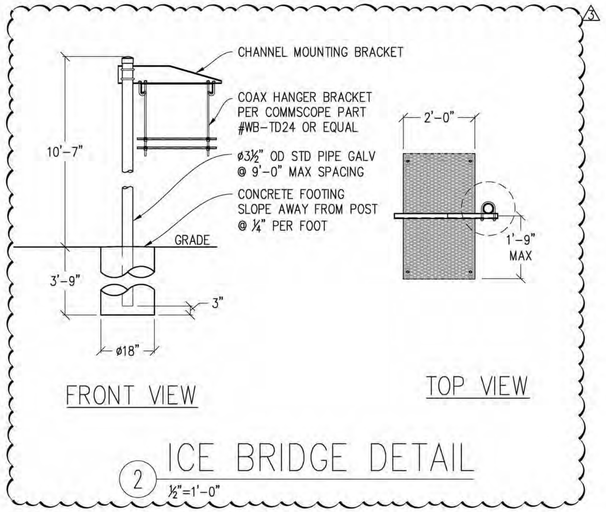

2 ICE BRIDGE DETAIL
½"=1'-0"

APPROVED
EL DORADO COUNTY
PLANNING COMMISSION
DATE: May 14, 2026
EXECUTIVE SECRETARY: Karen L. Garner

Issued For:

PLACERVILLE SHERIFF

3170 GOLD NUGGET WY, PLACERVILLE, CA 95667

PREPARED FOR

verizon

2770 SHADELANDS DR, BLDG 11
WALNUT CREEK, CA 94598

Vendor:

EPIC WIRELESS GROUP LLC
Connecting a Wireless World

MDG LOCATION ID:	5000940687
PROJECT ID:	17120113
DRAWN BY:	C. COLSTON
CHECKED BY:	S. SAVIG
APPROVED BY:	J. SPORE

ISSUE STATUS

REV	DATE	DESCRIPTION	CAD
3	05/13/26	CLIENT REV	C.C.
2	02/25/26	PLANNING COMMS	T.T.
1	12/18/25	PLANNING COMMS	S.V.
4	09/30/25	CLIENT REV	S.V.
3	09/25/25	CLIENT REV	T.T.
2	02/12/24	CD 100%	S.D.
1	02/06/24	CLIENT REV	S.D.
0	01/11/24	CD 90%	C.T.C

Licensee:

REGISTERED PROFESSIONAL ENGINEER
JAMES R. SPORE
S6336
STRUCTURAL
STATE OF CALIFORNIA

IT IS A VIOLATION OF LAW FOR ANY PERSON, UNLESS THEY ARE ACTING UNDER THE DIRECTION OF A LICENSED PROFESSIONAL ENGINEER, TO ALTER THIS DOCUMENT.

ENGINEER:

Streamline Engineering and Design, Inc.
3643 Taylor Road, Suite A, Loomis, CA 95650
Contact: Kevin Snowden Phone: 916-660-1930
E-Mail: kevin@streamlineeng.com Fax: 916-660-1941

THESE PLANS AND SPECIFICATIONS, AS INSTRUMENTS OF SERVICE, ARE AND SHALL REMAIN THE PROPERTY OF STREAMLINE ENGINEERING AND DESIGN, INC. WHETHER THE PROJECT FOR WHICH THEY WERE MADE IS EXECUTED OR NOT. THESE DRAWINGS AND SPECIFICATIONS SHALL NOT BE USED BY ANY PERSON BUT THE OWNER FOR WHOM THEY WERE PREPARED, NOR SHALL THEY BE LOANED TO THE OWNER'S ENGINEER. Copyright © 2026, STREAMLINE ENGINEERING AND DESIGN INC. ALL RIGHTS RESERVED.

SHEET TITLE:

STRUCTURAL 3
DETAILS

SHEET NUMBER:

S-1.2

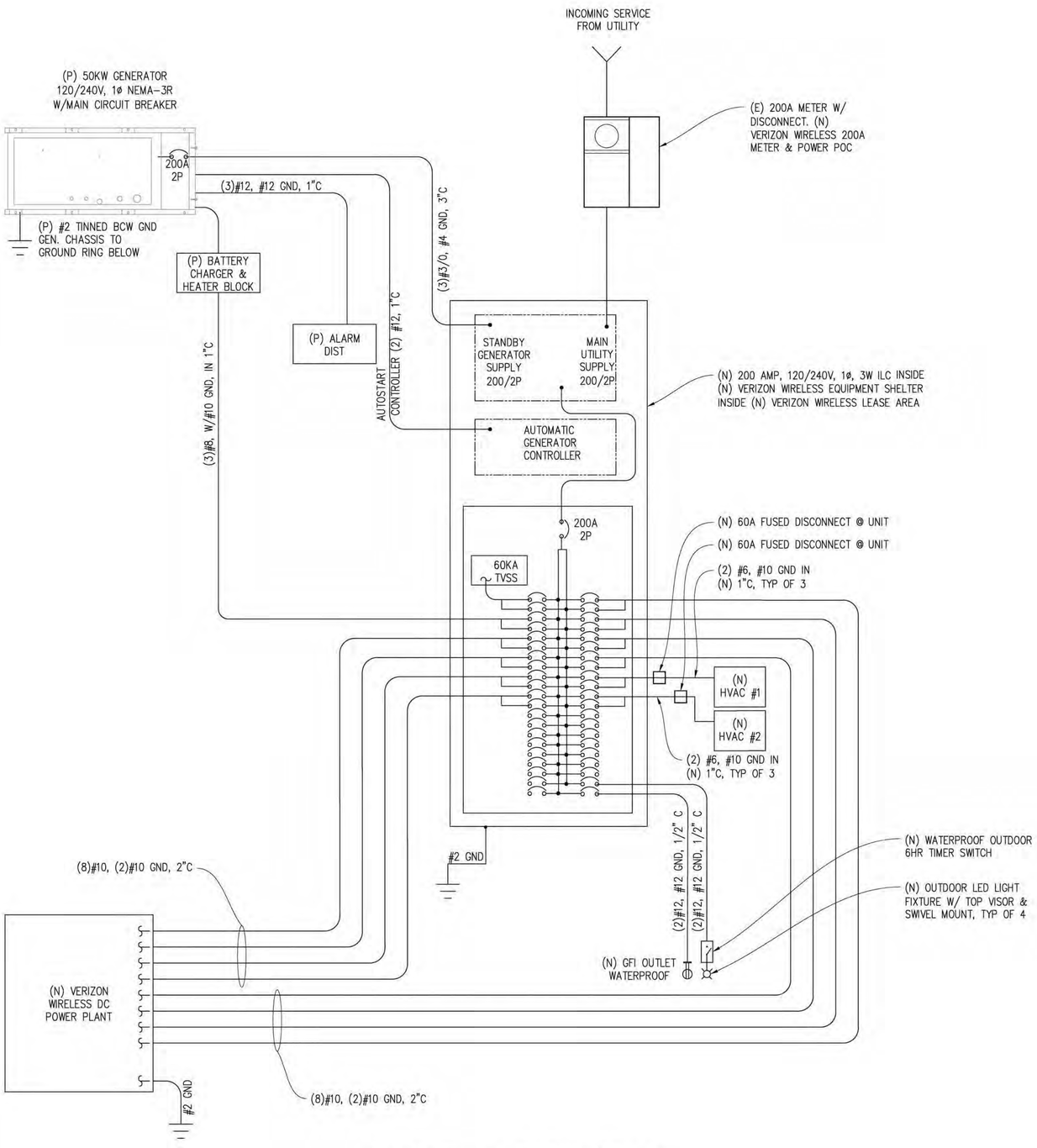

SINGLE LINE DIAGRAM

ELECTRIC LEGEND

- (M) METER
- CIRCUIT BREAKER
- SERVICE GROUND
- WIRED CONNECTION
- TIMER SWITCH, WATERPROOF
- OUTDOOR LIGHT
- GFI OUTLET, WATERPROOF

ELECTRICAL NOTES

1. ALL ELECTRICAL WORK SHALL CONFORM TO THE 2022 CEC AS WELL AS ALL ADOPTED STANDARDS, APPLICABLE STATE AND LOCAL CODES.
2. CONTRACTOR SHALL FURNISH AND INSTALL ALL CONDUIT, CONDUCTORS, PULL BOXES, TRANSFORMER PADS, POLE RISERS, AND PERFORM ALL TRENCHING AND BACKFILLING REQUIRED IN THE PLANS.
3. ALL ELECTRICAL ITEMS SHALL BE U.L. APPROVED OR LISTED AND PROCURED PER PLAN SPECIFICATIONS.
4. ALL CIRCUIT BREAKERS, FUSES, AND ELECTRICAL EQUIPMENT SHALL HAVE AN INTERRUPTION RATING NOT LESS THAN THE MAXIMUM SHORT CIRCUIT CURRENT TO WHICH THEY MAY BE SUBJECTED WITH A MINIMUM OF 10,000 A.I.C. OR AS REQUIRED.
5. THE ENTIRE ELECTRICAL INSTALLATION SHALL BE GROUNDED AS REQUIRED BY ALL APPLICABLE CODES.
6. ELECTRICAL WIRING SHALL BE COPPER #12 AWG MIN WITH TYPE THHN, THWN-2 OR THW-2, INSULATION RATED FOR 90°C DRY OR 70°C WET.
7. ALL OUTDOOR EQUIPMENT SHALL HAVE NEMA 3R ENCLOSURE.
8. ALL BURIED WIRE SHALL RUN THROUGH SCHEDULE 40 PVC CONDUIT UNLESS OTHERWISE NOTED.
9. A GROUND WIRE IS TO BE PULLED IN ALL CONDUITS.
10. WHERE ELECTRICAL WIRING OCCURS OUTSIDE A STRUCTURE AND HAS THE POTENTIAL FOR EXPOSURE TO WEATHER, WIRING SHALL BE IN WATERTIGHT GALVANIZED RIGID STEEL OR FLEXIBLE CONDUIT.
11. WHERE PLANS CALL FOR A NEW ELECTRICAL SERVICE, PRIOR TO SUBMITTING BID, CONTRACTOR SHALL VERIFY PLAN DETAILS WITH THE UTILITY'S SERVICE PLAN & REQ'MTS INCLUDING SERVICE VOLTAGE, METER LOCATION, MAIN DISCONNECTING MEANS, AND AIC REQ'MT, AND SHALL OBTAIN CLARIFICATION FROM THE PROJECT ENGINEER ON ANY DEVIATIONS FOUND IN THESE PLANS.
12. WHERE THESE PLANS SHOW A DC POWER PLANT, THE INSTALLATION OPERATING AT LESS THAN 50 VDC UNGROUNDED, 2-WIRE, SHALL COMPLY WITH ARTICLE 720, AS FOLLOWS:
    A. POWER PLANT SHALL BE SUPPLIED BY THE WIRELESS CARRIER AS A PULL-TAG ITEM AND INSTALLED BY THE CONTRACTOR.
    B. CONDUCTORS SHALL NOT BE SMALLER THAN #12 AWG COPPER MIN, CONDUCTORS FOR BRANCH CIRCUITS SUPPLYING MORE THAN ONE APPLIANCE SHALL BE 10 AWG CU MIN; CONTRACTOR SHALL SIZE CONDUCTORS BASED ON MFGR'S DATA FOR THE APPLIANCES SERVED.
    C. THERE ARE NO DC RECEPTACLES OR LUMINARIES ALLOWED ON THIS PROJECT. ALL CIRCUITS SHALL ORIGINATE AT AN INTEGRATED DOUBLE LUG TAP OR SOCKET TERMINATION ON AN INTEGRATED DC CIRCUIT BREAKER AT AN INDIVIDUAL RECTIFIER MODULE AND TERMINATE AT THE SPECIALIZED LUG ON THE RESPECTIVE APPLIANCE AS A SINGLE RUN OF WIRE WITHOUT SPLICES. ALL DC WIRING SHALL BE LABELED AT THE DC PLANT WITH THE APPLIANCE SERVED AND THE DC VOLTAGE.
    D. ALL CABLING SHALL BE INSTALLED IN A NEAT AND WORKMAN LIKE MANNER AND SUPPORTED BY BUILDING STRUCTURE, EG. (N) CABLE TRAY OVERHEAD, IN SUCH A MANNER THAT THE CABLE WILL NOT BE DAMAGED BY NORMAL USE.

APPROVED
EL DORADO COUNTY
PLANNING COMMISSION
DATE: May 14, 2026
EXECUTIVE SECRETARY: Karen L. Garner

(N) PANEL SCHEDULE

NAMEPLATE : PANEL A			SC LEVEL : 65,000				VOLTS: 120V/240V, 1ø		
LOCATION : INSIDE							BUS AMPS: 200A		
MOUNTING : WALL							MAIN CB: 200A		
ØA	ØB							ØA	ØB
LOAD VA	LOAD VA	LOAD DESCRIPTION	BKR AMP/ POLE	CIRCUIT NO		BKR AMP/ POLE	LOAD DESCRIPTION	LOAD VA	LOAD VA
30		SURGE ARRESTOR	60/2	1	2	30/2	(N) DC POWER PLANT	1320	
	30	" "	" "	3	4	" "	" "		1320
3840		(N) BATTERY CHARGER & HTR	40/2	5	6	30/2	" "	1320	
	3840	" "	" "	7	8	" "	" "		1320
1320		(N) DC POWER PLANT	30/2	9	10	30/2	" "	1320	
	1320	" "	" "	11	12	" "	" "		1320
1320		" "	30/2	13	14	30/2	" "	1320	
	1320	" "	" "	15	16	" "	" "		1320
1320		" "	30/2	17	18	60/2	(N) AC UNIT #1	3684	
	1320	" "	" "	19	20	" "	" "		3684
1320		" "	30/2	21	22	60/2	(N) AC UNIT #2	3684	
	1320	" "	" "	23	24	" "	" "		3684
		BLANK	–	25	26	–	BLANK		
		" "	–	27	28	–	" "		
		" "	–	29	30	–	" "		
		" "	–	31	32	–	" "		
		" "	–	33	34	–	" "		
		" "	–	35	36	–	" "		
		" "	–	37	38	–	" "		
		" "	–	39	40	20/1	LIGHT		300
		" "	–	41	42	20/1	GFI RECEPTACLE	180	
9150	9150	PHASE TOTALS					PHASE TOTALS	12648	12648
TOTAL VA =	43596	TOTAL AMPS =	182						

Issued For:

PLACERVILLE SHERIFF

3170 GOLD NUGGET WY, PLACERVILLE, CA 95667

PREPARED FOR

verizon

2770 SHADELANDS DR, BLDG 11
WALNUT CREEK, CA 94598

Vendor:

EPIC WIRELESS GROUP LLC
Connecting a Wireless World

MDG LOCATION ID:	5000940687
PROJECT ID:	17120113
DRAWN BY:	C. COLSTON
CHECKED BY:	S. SAVIG
APPROVED BY:	J. SPORE

ISSUE STATUS

REV	DATE	DESCRIPTION	CAD
5	05/13/26	CLIENT REV	C.C.
4	02/25/26	PLANNING COMMS	T.T.
3	12/18/25	PLANNING COMMS	S.V.
4	09/30/25	CLIENT REV	S.V.
3	09/25/25	CLIENT REV	T.T.
2	02/12/24	CD 100%	S.D.
1	02/06/24	CLIENT REV	S.D.
0	01/11/24	CD 90%	C.T.C

Licensee:

REGISTERED PROFESSIONAL ENGINEER JAMES R. SPORE S6336 STRUCTURAL STATE OF CALIFORNIA

IT IS A VIOLATION OF LAW FOR ANY PERSON, UNLESS THEY ARE ACTING UNDER THE DIRECTION OF A LICENSED PROFESSIONAL ENGINEER, TO ALTER THIS DOCUMENT.

ENGINEER:

Streamline Engineering and Design, Inc.
3643 Taylor Road, Suite A, Loomis CA 95650
Contact: Kevin Greenen Phone: 916-660-1930
E-Mail: kevin@streamlineeng.com Fax: 916-660-1941

THESE PLANS AND SPECIFICATIONS AS INSTRUMENTS OF SERVICE, ARE AND SHALL REMAIN THE PROPERTY OF STREAMLINE ENGINEERING AND DESIGN, INC. WHEN THEY HAVE FULFILLED THEIR PURPOSE, THEY ARE TO BE RETURNED UPON REQUEST. THESE DRAWINGS AND SPECIFICATIONS SHALL NOT BE USED FOR OTHER WORK AND ARE NOT TO BE LOANED, COPIED OR REPRODUCED IN WHOLE OR IN PART WITHOUT WRITTEN CONSENT OF STREAMLINE ENGINEERING AND DESIGN, INC. ALL RIGHTS RESERVED. Copyright © 2009, STREAMLINE ENGINEERING AND DESIGN, INC. ALL RIGHTS RESERVED.

SHEET TITLE:

UTILITY SITE PLAN

SHEET NUMBER:

E-1.1

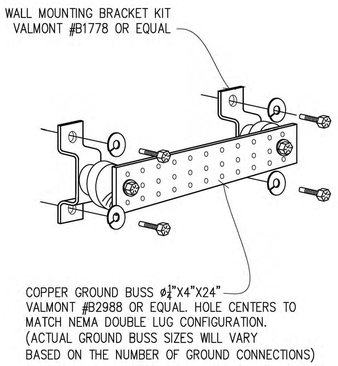

1 GROUND BUSS DETAIL

NOT TO SCALE

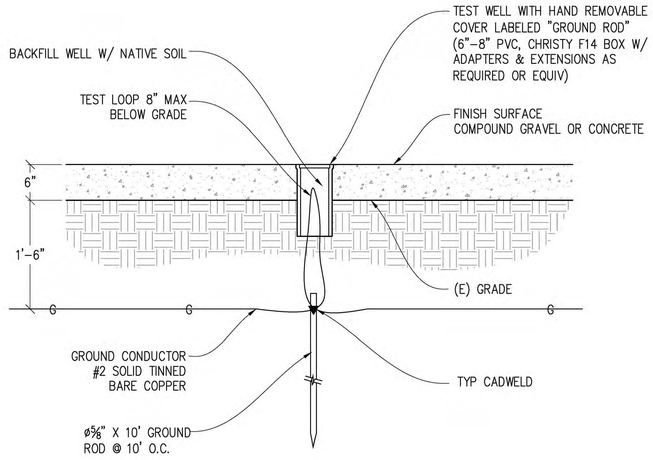

2 TEST WELL DETAIL

1"=1'

NOTE: THE GROUND ELECTRODE SYSTEM SHALL CONSIST OF DRIVEN GROUND RODS. THE GROUND RODS SHALL BE ⅝" X 10' COPPER CLAD STEEL SPACED AT 10' INTERVALS MAX. RODS SHALL BE INTERCONNECTED WITH #2 SOLID TINNED BARE COPPER GROUND WIRE BURIED A MINIMUM 18" BELOW GRADE. AN ONSITE INSPECTION BY THE OWNER SHALL BE REQUIRED PRIOR TO ANY BACKFILL.

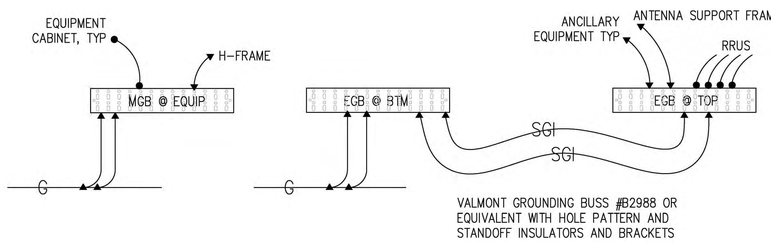

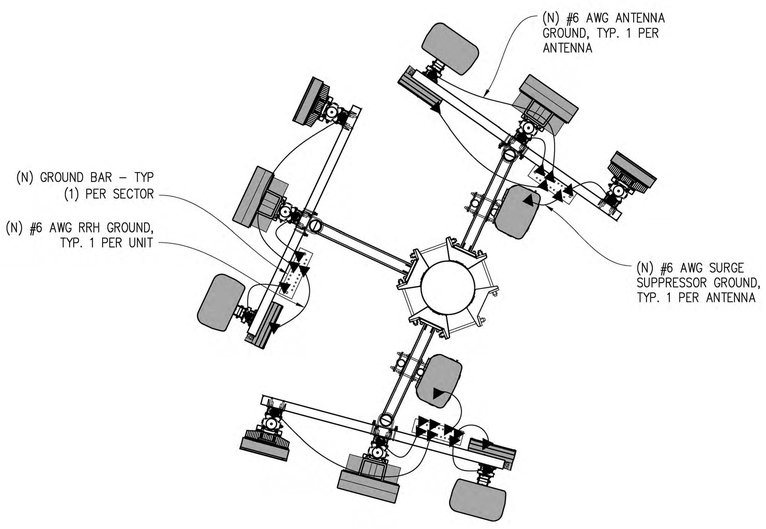

ANTENNA GROUNDING PLAN

GROUNDING LEGEND

- MECHANICAL CONNECTION
- EXOTHERMIC CADWELD
- TYP. CADWELD INSPECTION WELL
- TYP ⅝" DIA. X 10'–0" LONG COPPER CLAD GROUND ROD @ 10' O.C. MAX & 18" MIN BELOW FINISH GRADE
- GATE GROUNDING STRAP
- G — TYP #2 TINNED BCW UNDERGROUND GND RING @ 18" MIN BELOW FINISH GRADE
- SGI — GROUND WIRE #2 STRANDED GREEN INSULATED WIRE

GROUNDING NOTES

1. GROUNDING SHALL COMPLY WITH CEC ARTICLE 250.
2. USE #2 COPPER STRANDED WIRE WITH GREEN COLOR INSULATION FOR ABOVE GRADE GROUNDING (UNLESS OTHERWISE SPECIFIED) AND #2 SOLID TINNED BARE COPPER WIRE FOR BELOW GRADE GROUNDING AS INDICATED ON THE DRAWING.
3. EXOTHERMIC WELDS SHALL BE USED FOR ALL GROUNDING CONNECTIONS BELOW GRADE.
4. EXPOSED GROUNDING CONNECTIONS SHALL BE MADE WITH BURNDY HYGROUND COMPRESSION TYPE CONNECTORS OR EXOTHERMIC WELDS AS SPECIFIED IN THE PLANS.
5. CONNECTIONS TO EQUIPMENT SHALL BE MADE USING STAINLESS STEEL HARDWARE.
6. APPLY BUTYL & ELECTRICAL TAPE OVER COLD SHRINK AT ALL LOCATIONS FOR WEATHER PROOFING OVER COAX GROUND KITS.
7. CONNECTIONS TO GROUND BARS SHALL BE MADE WITH TWO HOLE COMPRESSION TYPE COPPER LUGS WITH STAR WASHERS AND NO–OX OR EQUIVALENT PLACED BETWEEN CONNECTOR AND GROUND BAR.
8. ROUTE GROUNDING CONDUCTORS ALONG THE SHORTEST AND STRAIGHTEST PATH POSSIBLE, EXCEPT AS OTHERWISE INDICATED. GROUNDING LEADS SHOULD NEVER BE BENT AT RIGHT ANGLES. ALWAYS MAKE A 12" RADIUS BEND, HOWEVER, #6 WIRE CAN BE BENT AT A 6" RADIUS WHEN NECESSARY.
9. THE SYSTEM GROUND RESISTANCE MUST BE 10 OHMS OR LESS. TO ACHIEVE THIS LEVEL OF RESISTANCE THE CONTRACTOR SHALL PURSUE ONE OF THE FOLLOWING FOUR OPTIONS:

   A. CONNECT TO EXISTING GROUNDING SYSTEMS
   B. CONNECT TO BUILDING STEEL COLUMNS
   C. INSTALL A NEW GROUNDING SYSTEM

   UPON COMPLETION OF THE GROUNDING INSTALLATION THE CONTRACTOR SHALL EMPLOY AN OWNER APPROVED 3RD PARTY TO CONDUCT A "FALL OF POTENTIAL" TEST AND SUBMIT A REPORT OF SUCH TEST FOR APPROVAL TO EITHER THE OWNER OR CONSTRUCTION MANAGER.

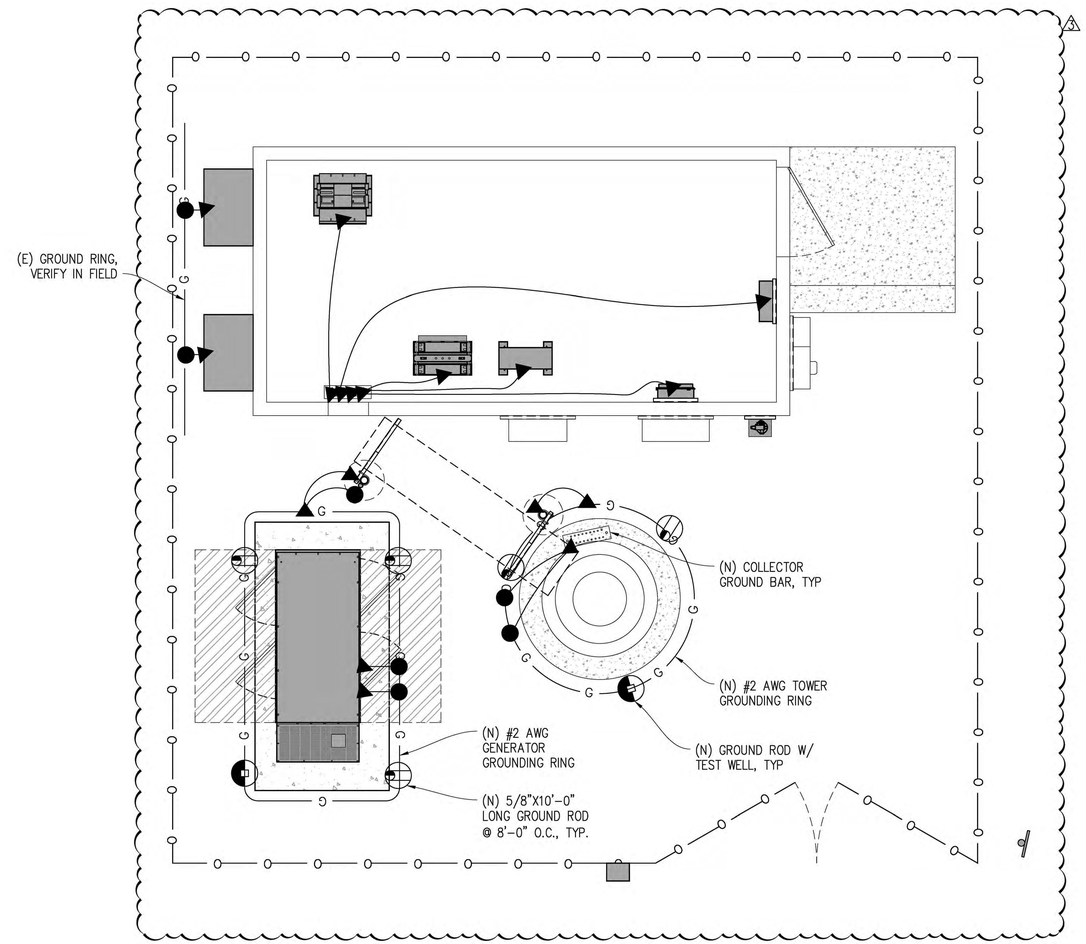

EQUIPMENT GROUNDING PLAN

Issued For:

PLACERVILLE SHERIFF

3170 GOLD NUGGET WY,
PLACERVILLE, CA 95667

PREPARED FOR

verizon

2770 SHADELANDS DR, BLDG 11
WALNUT CREEK, CA 94598

Vendor:

EPIC WIRELESS GROUP LLC
Connecting a Wireless World

MDG LOCATION ID:	5000940687
PROJECT ID:	17120113
DRAWN BY:	C. COLSTON
CHECKED BY:	S. SAVIG
APPROVED BY:	J. SPORE

ISSUE STATUS

REV	DATE	DESCRIPTION	CAD
3	05/13/26	CLIENT REV	C.C.
2	02/25/26	PLANNING COMMS	T.T.
1	12/18/25	PLANNING COMMS	S.V.
4	09/30/25	CLIENT REV	S.V.
3	09/25/25	CLIENT REV	T.T.
2	02/12/24	CD 100%	S.D.
1	02/06/24	CLIENT REV	S.D.
0	01/11/24	CD 90%	C.T.C

Licensee:

REGISTERED PROFESSIONAL ENGINEER
JAMES R. SPORE
S6336
STRUCTURAL
STATE OF CALIFORNIA

IT IS A VIOLATION OF LAW FOR ANY PERSON, UNLESS THEY ARE ACTING UNDER THE DIRECTION OF A LICENSED PROFESSIONAL ENGINEER, TO ALTER THIS DOCUMENT.

ENGINEER:

Streamline Engineering and Design, Inc.
3848 Taylor Road, Suite A, Loomis, CA 95650
Contact: Kevin Savage Phone: 916-660-1930
E-Mail: kevin@streamlineeng.com Fax: 916-660-1941

THESE PLANS AND SPECIFICATIONS, AS INSTRUMENTS OF SERVICE, ARE AND SHALL REMAIN THE PROPERTY OF STREAMLINE ENGINEERING AND DESIGN INC. THEY ARE TO BE USED ONLY FOR THE PROJECT NAMED HEREON AND ARE NOT TO BE LOANED, COPIED OR REPRODUCED IN WHOLE OR IN PART, WHICH ARE RESULTS OF THE PROJECT. THESE DRAWINGS AND SPECIFICATIONS SHALL NOT BE USED BY ANY PERSON OR ENTITY FOR ANY PURPOSE OTHER THAN THE PROJECT SPECIFIED TO THE ENGINEER. Copyright © 2009, STREAMLINE ENGINEERING AND DESIGN INC. ALL RIGHTS RESERVED.

SHEET TITLE:

GROUNDING PLAN & DETAILS

SHEET NUMBER:

E-1.2

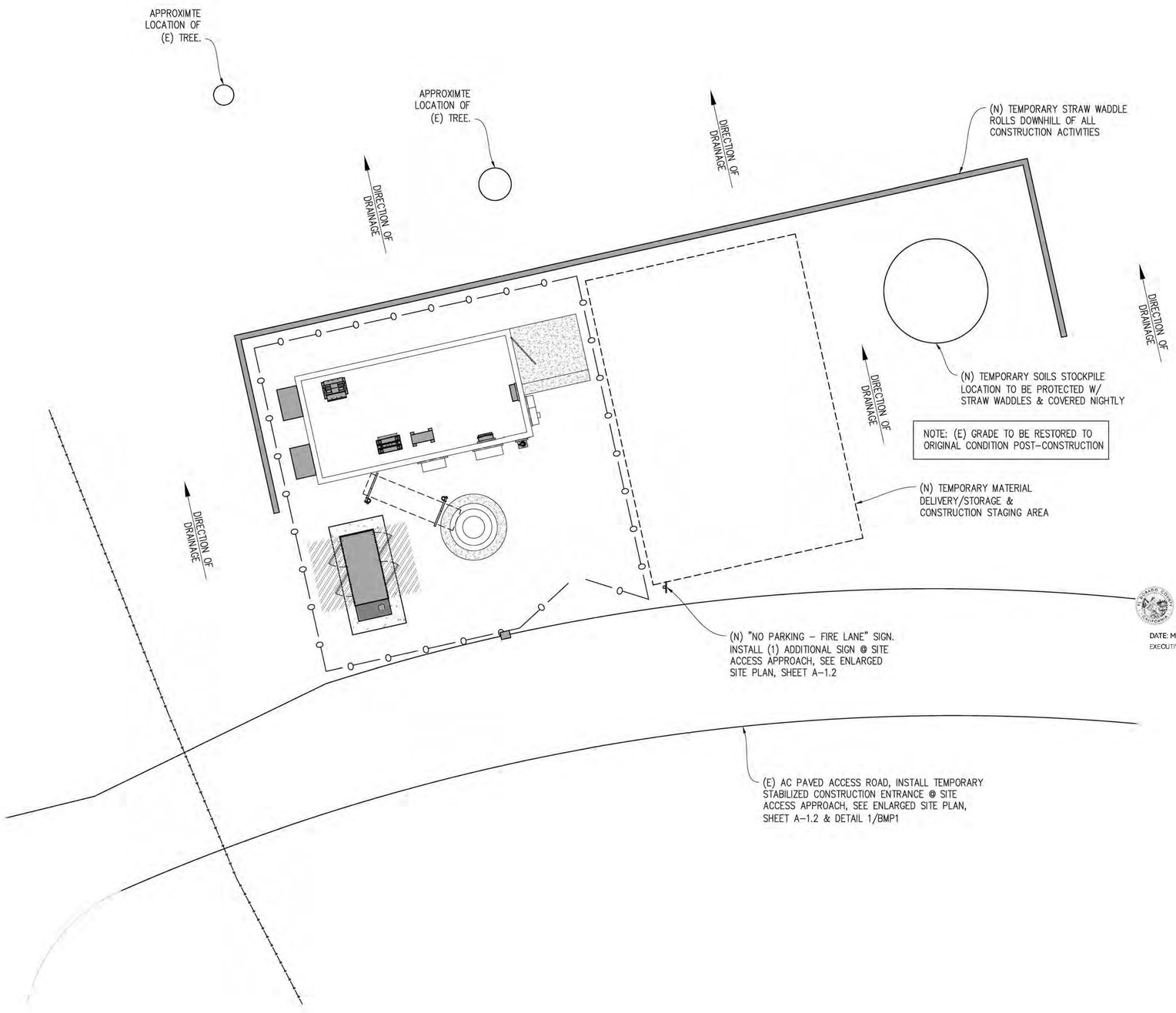

APPROVED
EL DORADO COUNTY
PLANNING COMMISSION
DATE: May 14, 2026
EXECUTIVE SECRETARY: Karen L. Garner

STABILIZED CONSTRUCTION ENTRANCE

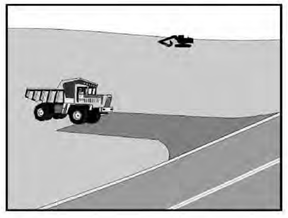

NOTES:

1. SEDIMENTS AND OTHER MATERIALS SHALL NOT BE TRACKED FROM THE SITE BY VEHICLE TRAFFIC. THE CONSTRUCTION ENTRANCE ROADWAYS SHALL BE STABILIZED SO AS TO PREVENT SEDIMENTS FROM BEING DEPOSITED INTO THE PUBLIC ROADS. SEDIMENT DEPOSITED ON THE ROADWAY MUST BE SWEPT UP IMMEDIATELY AND MAY NOT BE WASHED DOWN BY RAIN OR OTHER MEANS INTO THE STORM DRAIN SYSTEM. SEE TYPE 1 AND TYPE 2 DETAILS.
2. STABILIZED CONSTRUCTION ENTRANCE SHALL BE:
   A. LOCATED AT ANY POINT WHERE TRAFFIC WILL BE ENTERING OR LEAVING A CONSTRUCTION SITE TO OR FROM A PUBLIC RIGHT OF WAY, STREET, ALLEY, AND SIDEWALK OR PARKING AREA.
   B. A SERIES OF STEEL PLATES WITH "RUMBLE STRIPS", AND/OR MIN >3" TO <6" CRUSHED AGGREGATE WITH LENGTH, WIDTH & THICKNESS AS NEEDED TO ADEQUATELY PREVENT ANY TRACKING ONTO PAVED SURFACES.
3. ADDING A WASH RACK WITH A SEDIMENT TRAP LARGE ENOUGH TO COLLECT ALL WASH WATER CAN GREATLY IMPROVE EFFICIENCY.
4. ALL VEHICLES ACCESSING THE CONSTRUCTION SITE SHALL UTILIZE THE STABILIZED CONSTRUCTION ENTRANCE SITES.
   A. REMOVE ALL SEDIMENT DEPOSITED ON PAVED ROADWAYS IMMEDIATELY.
   B. SWEEP PAVED AREAS THAT RECEIVE CONSTRUCTION TRAFFIC WHENEVER SEDIMENT BECOMES VISIBLE.
   C. PAVEMENT WASHING WITH WATER IS PROHIBITED IF IT RESULTS IN A DISCHARGE TO THE STORM DRAIN SYSTEM.

1 STABILIZED ENTRANCE/EXIT
NO SCALE

TN

BMP PLAN
½"=1'-0"

0 6" 1' 2' 3' 5' 7' 10'

Issued For:

PLACERVILLE SHERIFF

3170 GOLD NUGGET WY,
PLACERVILLE, CA 95667

PREPARED FOR

verizon

2770 SHADELANDS DR, BLDG 11
WALNUT CREEK, CA 94598

Vendor:

EPIC WIRELESS GROUP LLC
Connecting a Wireless World

MDG LOCATION ID:	5000940687
PROJECT ID:	17120113
DRAWN BY:	C. COLSTON
CHECKED BY:	S. SAVIG
APPROVED BY:	J. SPORE

ISSUE STATUS

REV	DATE	DESCRIPTION	CAD
5	05/13/26	CLIENT REV	C.C.
3	02/25/26	PLANNING COMMS	T.T.
1	12/18/25	PLANNING COMMS	S.V.
4	09/30/25	CLIENT REV	S.V.
3	09/25/25	CLIENT REV	T.T.
2	02/12/24	CD 100%	S.D.
1	02/06/24	CLIENT REV	S.D.
0	01/11/24	CD 90%	C.T.C

Licensee:

REGISTERED PROFESSIONAL ENGINEER JAMES R. SPORE S6336 STRUCTURAL STATE OF CALIFORNIA

IT IS A VIOLATION OF LAW FOR ANY PERSON, UNLESS THEY ARE ACTING UNDER THE DIRECTION OF A LICENSED PROFESSIONAL ENGINEER, TO ALTER THIS DOCUMENT.

ENGINEER:

Streamline Engineering and Design, Inc.
3843 Taylor Road, Suite A, Loomis, CA 95650
Contact: Kevin Scrivener Phone: 916-660-1930
E-Mail: kevin@streamlineeng.com Fax: 916-660-1941

These plans and specifications, as instruments of service, are and shall remain the property of Streamline Engineering and Design, Inc. The reproduction, alteration or use for any purpose other than those authorized by written permission is forbidden. Title to all plans and specifications is held by Streamline Engineering and Design, Inc. and shall be returned upon demand. These drawings and specifications shall not be used by any person or entity for any purpose other than those authorized by Streamline Engineering and Design, Inc. Copyright © 2009, Streamline Engineering and Design Inc. All rights reserved.

SHEET TITLE:

BMP PLAN & DETAIL 5

SHEET NUMBER:

BMP1

BEST MANAGEMENT PRACTICES TABLE

BEST MANAGEMENT PRACTICES	LOCATION	SCHEDULE IMPLEMENTATION	MAINTENANCE SCHEDULE
PRESERVING EXISTING VEGETATION	AROUND PERIMETER OF PROJECT SITE	CONTINUOUS UNTIL CONSTRUCTION IS COMPLETED	EDUCATE EMPLOYEES AND SUBCONTRACTORS REGARDING IMPORTANCE OF MAINTAINING EXISTING VEGETATION TO PREVENT EROSION AND FILTER OUT SEDIMENT IN RUNOFF FROM DISTURBED AREAS ON THE CONSTRUCTION SITE. INSPECT SITE PERIMETER MONTHLY TO VERIFY THE OUTSIDE VEGETATION IS NOT DISTURBED.
PROTECT GRADED AREAS AND SLOPES FROM WASHOUT AND EROSION	THROUGHOUT PROJECT SITE	CONTINUOUS	INSPECT GRADED AREAS AND SLOPES ON AT LEAST A MONTHLY BASIS TO CHECK FOR EROSION. GRADE TRIBUTARY AREAS OR INSTALL SAND DIKES AS NECESSARY TO PREVENT EROSION.
GRAVEL FILTER	ALONG FLOW LINES OF UNPAVED ROADWAYS WITHIN SITE	IN PLACE CONTINUOUSLY UNTIL ROADWAYS ARE PAVED	INSPECT AFTER EACH STORM. REMOVE ONSITE SEDIMENT DEPOSITED BEHIND BERM OR BARRIER TO MAINTAIN EFFECTIVENESS.
BAG INLET FILTER	INLETS TO THE STORM DRAINAGE SYSTEM	CONTINUOUS UNTIL LANDSCAPING IS IN PLACE	INSPECT WEEKLY AND AFTER EACH STORM. REMOVE SEDIMENT AND DEBRIS BEFORE ACCUMULATION HAVE REACHED ONE THIRD THE DEPTH OF THE BAG. REPAIR OR REPLACE INLET FILTER BAG AS SOON AS DAMAGE OCCURS.
PINE NEEDLE ROLLS	SEE NOTE 3 OF EROSION & CONTROL NOTES	CONTINUOUS	INSPECT AFTER EACH STORM. REMOVE SEDIMENT DEPOSITED BEHIND FIBER ROLLS WHENEVER NECESSARY TO MAINTAIN EFFECTIVENESS.
HYDROSEEDING	3:1 SLOPES	IN PLACE DURING BY SEPT. 15	INSPECT SLOPES ON AT LEAST A MONTHLY BASIS TO CHECK FOR EROSION. IF EROSION IS NOTED, SPREAD STRAW MULCH OVER AFFECTED AREAS.
STABILIZED CONSTRUCTION ENTRANCE	ENTRANCES TO SITE FROM PUBLIC ROADWAYS	CONTINUOUS, UNTIL ENTRANCES AND ONSITE ROADWAYS ARE PAVED	INSPECT ON A MONTHLY BASIS AND AFTER EACH RAINFALL. ADD AGGREGATE BASE MATERIAL WHENEVER NECESSARY TO PREVENT SEDIMENT FROM BEING TRACKED INTO PUBLIC STREET.
WIND EROSION CONTROL PRACTICES	WHEREVER NECESSARY THROUGHOUT PROJECT SITE	CONTINUOUS UNTIL GRADING IS COMPLETED AND SOILS HAVE STABILIZED	INSPECT SITE DURING WINDY CONDITIONS TO IDENTIFY AREAS WHERE WIND AND EROSION IS OCCURRING AND ABATE EROSION AS NECESSARY.
GOOD HOUSEKEEPING MEASURES	THROUGHOUT PROJECT SITE	CONTINUOUS UNTIL CONSTRUCTION IS COMPLETED	INSPECT SITE ON AT LEAST A MONTHLY BASIS TO VERIFY GOOD HOUSEKEEPING PRACTICES ARE BEING IMPLEMENTED.
PROPER CONSTRUCTION MATERIAL STORAGE	DESIGNATED AREA	CONTINUOUS UNTIL CONSTRUCTION IS COMPLETED	INSPECT SITE ON AT LEAST A WEEKLY BASIS TO VERIFY THAT CONSTRUCTION MATERIALS ARE STORED IN A MANNER WHICH COULD NOT CAUSE STORM WATER POLLUTION.
PROPER CONSTRUCTION WASTE STORAGE AND DISPOSAL INCLUDING	DESIGNATED COLLECTION AREA AND CONTAINERS	CONTINUOUS UNTIL CONSTRUCTION IS COMPLETED	INSPECT SITE ON AT LEAST A WEEKLY BASIS TO ASSURE WASTE IS STORED PROPERLY AND DISPOSED OF AT LEGAL DISPOSAL SITE, DAILY.
CONCRETE SPILL CLEANUP PAINT & PAINTING SUPPLIES	MATERIAL HANDLING AREAS	IMMEDIATELY AT TIME OF SPILL	INSPECT MATERIAL HANDLING AREAS ON AT LEAST A MONTHLY BASIS TO VERIFY PROPER SPILL CLEANUP.
VEHICLE FUELING, MAINTENANCE & CLEANING	DESIGNATED AREA WITH SECONDARY CONTAINMENT	CONTINUOUS	KEEP AMPLE SUPPLIES OF SPILL CLEANUP MATERIALS ON SITE & INSPECT ON REGULAR SCHEDULE.
STREET AND STORM DRAINAGE FACILITY MAINTENANCE DEFINITIONS	STREETS AND STORM DRAINAGE FACILITIES	CONTINUOUS UNTIL CONSTRUCTION IS COMPLETED	MAINTAIN STORM DRAINAGE FACILITIES AND PAVED STREETS CLEAR OF SEDIMENT AND DEBRIS.

1. WET SEASON: ENTIRE PERIOD BETWEEN OCTOBER 1 THROUGH APRIL 30. CONTRACTOR SHALL ALSO IMPLEMENT WET SEASON MEASURES IF WET WEATHER IS EXPECTED DURING THE DRY SEASON

2. PHASES OF GRADING

INITIAL: WHEN CLEARING AND GRUBBING ACTIVITIES OCCUR.

ROUGH: WHEN CUT AND FILL ACTIVITIES OCCUR AND THE SITE IMPROVEMENTS ARE CONSTRUCTED, INCLUDING UNDERGROUND PIPING, STREETS, SIDEWALKS, AND OTHER IMPROVEMENTS.

FINAL: WHEN FINAL ELEVATION IS SET, AND SITE IMPROVEMENTS ARE COMPLETED AND READY FOR CITY ACCEPTANCE.

EROSION AND SEDIMENT CONTROL NOTES

1. THE CONTRACTOR SHALL FOLLOW TYPICAL GUIDELINES FOR GRADING, EROSION AND SEDIMENT CONTROL FOR THE MEASURES SHOWN OR STATED ON THESE PLANS.
2. CONTRACTOR MUST ENSURE THAT THE CONSTRUCTION SITE IS PREPARED PRIOR TO THE ONSET OF ANY STORM. CONTRACTOR SHALL HAVE ALL EROSION AND SEDIMENT CONTROL MEASURES IN PLACE FOR THE WINTER MONTHS PRIOR TO OCTOBER 1.
3. ALL EROSION AND SEDIMENT CONTROL MEASURES SHALL BE MAINTAINED UNTIL DISTURBED AREAS ARE STABILIZED. CHANGES TO THIS EROSION AND SEDIMENT CONTROL PLAN SHALL BE MADE TO MEET FIELD CONDITIONS ONLY WITH THE APPROVAL OF OR AT THE DIRECTION OF A REPRESENTATIVE OF THE DEPARTMENT OF UTILITIES.
4. THIS PLAN MAY NOT COVER ALL THE SITUATIONS THAT ARISE DURING CONSTRUCTION DUE TO UNANTICIPATED FIELD CONDITIONS. VARIATIONS MAY BE MADE TO THE PLAN IN THE FIELD SUBJECT TO THE APPROVAL OF OR AT THE DIRECTION OF A REPRESENTATIVE OF THE DEPARTMENT OF UTILITIES.
5. ALL EROSION AND SEDIMENT CONTROL MEASURES SHALL BE CHECKED BEFORE AND AFTER ALL STORMS TO ENSURE MEASURES ARE FUNCTIONING PROPERLY.
6. CONTRACTOR SHALL MAINTAIN A LOG AT THE SITE OF ALL INSPECTIONS OR MAINTENANCE OF BMPS, AS WELL AS, ANY CORRECTIVE CHANGES TO THE BMPS OR EROSION AND SEDIMENT CONTROL PLAN.
7. IN AREAS WHERE SOIL IS EXPOSED, PROMPT REPLANTING WITH NATIVE COMPATIBLE, DROUGHT-RESISTANT VEGETATION SHALL BE PERFORMED. NO AREAS WILL BE LEFT EXPOSED OVER THE WINTER SEASON.
8. THE CONTRACTOR SHALL INSTALL THE STABILIZED CONSTRUCTION ENTRANCE PRIOR TO COMMENCEMENT OF GRADING. LOCATION OF THE ENTRANCE MAY BE ADJUSTED BY THE CONTRACTOR TO FACILITATE GRADING OPERATIONS. ALL CONSTRUCTION TRAFFIC ENTERING THE PAVED ROAD MUST CROSS THE STABILIZED CONSTRUCTION ENTRANCE. THE STABILIZED CONSTRUCTION ENTRANCE SHALL REMAIN IN PLACE UNTIL THE ROAD BASE ROCK COURSE IS COMPLETED.
9. ALL SEDIMENT DEPOSITED ON PAVED ROADWAYS SHALL BE SWEPT AT THE END OF EACH WORKING DAY OR AS NECESSARY.
10. CONTRACTOR SHALL PLACE GRAVEL BAGS AROUND ALL NEW DRAINAGE STRUCTURE OPENINGS IMMEDIATELY AFTER THE STRUCTURE OPENING IS CONSTRUCTED. THESE GRAVEL BAGS SHALL BE MAINTAINED AND REMAIN IN PLACE UNTIL CONSTRUCTION IS COMPLETED.
11. THE ENTRANCE SHALL BE MAINTAINED IN A CONDITION THAT WILL PREVENT TRACKING OR FLOWING OF SEDIMENT ONTO PUBLIC RIGHT-OF-WAYS. THIS MAY REQUIRE TOP DRESSING, REPAIR AND/OR CLEANOUT OF ANY MEASURES USED TO TRAP SEDIMENT.
12. WHEN NECESSARY, WHEELS SHALL BE CLEANED PRIOR TO ENTRANCE ONTO PUBLIC RIGHT-OF-WAY.
13. WHEN WASHING IS REQUIRED, IT SHALL BE DONE ON AN AREA STABILIZED WITH CRUSHED STONE THAT DRAINS INTO AN APPROVED SEDIMENT TRAP OR SEDIMENT BASIN.
14. CONTRACTOR SHALL IMPLEMENT HOUSEKEEPING PRACTICES AS FOLLOWS:

A. SOLID WASTE MANAGEMENT:
CONTRACTOR SHALL PLACE ALL SOLID WASTE MATERIALS IN CONTRACTOR'S TRUCKS AND HAUL OFF SITE TO APPROVED SOLID WASTE RECEPTACLES AT CLOSE OF EACH BUSINESS DAY AND NO STORAGE OF SOLID WASTE ONSITE IS ALLOWED.

B. MATERIAL DELIVERY AND STORAGE:
PROVIDE A DESIGNATED MATERIAL STORAGE AREA WITH SECONDARY CONTAINMENT SUCH AS BERMING. STORE MATERIAL ON PALLETS AND PROVIDE COVERING FOR SOLUBLE MATERIALS. RELOCATE STORAGE AREA INTO BUILDING SHELL WHEN POSSIBLE. INSPECT AREA WEEKLY

C. CONCRETE WASTE:
PROVIDE A DESIGNATED AREA FOR A TEMPORARY PIT TO BE USED FOR CONCRETE TRUCK WASH-OUT. DISPOSE OF HARDENED CONCRETE OFFSITE. AT NO TIME SHALL A CONCRETE TRUCK DUMP ITS WASTE AND CLEAN ITS TRUCK INTO THE LOCAL STORM DRAINS VIA CURB AND GUTTER. INSPECT DAILY TO CONTROL RUNOFF, AND WEEKLY FOR REMOVAL OF HARDENED CONCRETE.

D. PAINT AND PAINTING SUPPLIES:
PROVIDE INSTRUCTION TO EMPLOYEES AND SUBCONTRACTORS REGARDING REDUCTION OF POLLUTANTS INCLUDING MATERIAL STORAGE, USE, AND CLEAN UP. INSPECT SITE WEEKLY FOR EVIDENCE OF IMPROPER DISPOSAL.

E. VEHICLE FUELING, MAINTENANCE AND CLEANING:
PROVIDE A DESIGNATED FUELING AREA WITH SECONDARY CONTAINMENT SUCH AS BERMING. DO NOT ALLOW MOBILE FUELING OF EQUIPMENT. PROVIDE EQUIPMENT WITH DRIP PANS. RESTRICT ONSITE MAINTENANCE AND CLEANING OF EQUIPMENT TO A MINIMUM. INSPECT AREA WEEKLY.

F. HAZARDOUS WASTE MANAGEMENT:
PREVENT THE DISCHARGE OF POLLUTANTS FROM HAZARDOUS WASTES TO THE DRAINAGE SYSTEM THROUGH PROPER MATERIAL USE, WASTE DISPOSAL AND TRAINING OF EMPLOYEES. HAZARDOUS WASTE PRODUCTS COMMONLY FOUND ON-SITE INCLUDE BUT ARE NOT LIMITED TO PAINTS & SOLVENTS, PETROLEUM PRODUCTS, FERTILIZERS, HERBICIDES & PESTICIDES, SOIL STABILIZATION PRODUCTS, ASPHALT PRODUCTS AND CONCRETE CURING PRODUCTS.

PINE NEEDLE ROLL NOTES

1. REPAIR OR REPLACE SPLIT, TORN UNRAVELING OR SLUMPING PINE NEEDLE ROLLS.
2. INSPECT PINE NEEDLE ROLLS WHEN RAIN IS FORECAST, FOLLOWING RAIN EVENTS, AT LEAST DAILY DURING PROLONGED RAINFALL, AND AT TWO-WEEK INTERVALS DURING THE NON-RAINY SEASON.
3. SEDIMENT SHOULD BE REMOVED WHEN SEDIMENT ACCUMULATION REACHES ONE-HALF THE DESIGNATED SEDIMENT STORAGE DEPTH, USUALLY ONE-HALF THE DISTANCE BETWEEN THE TOP OF THE PINE NEEDLE ROLL AND THE ADJACENT GROUND SURFACE. SEDIMENT REMOVED DURING MAINTENANCE MAY BE INCORPORATED INTO THE EARTHWORK ON THE SITE OR DISPOSED AT AN APPROPRIATE LOCATION.
4. FILTER BARRIER SHALL BE CONSTRUCTED LONG ENOUGH TO EXTEND ACROSS THE EXPECTED FLOW PATH AND AS APPROVED BY THE LANDSCAPE INSPECTOR.
5. PINE NEEDLE ROLL (8"-12" DIAMETER) SHALL BE PLACED INTO THE KEY TRENCH AND STAKES ON BOTH SIDES OF THE ROLL WITHIN 6 FEET OF EACH END AND THEN EVERY 3' TO 4' WITH 1X2 23" STAKES. STAKES ARE TYPICALLY DRIVEN IN ON ALTERNATING SIDES OF THE ROLL. ADJACENT ROLLS SHALL OVERLAP 2'.
6. CLEAR SUBGRADE SO THAT REMOVAL OF ALL LOCAL DEVIATIONS AND TO REMOVE LARGE STONES OR DEBRIS THAT WILL INHIBIT CLOSE CONTACT OF THE PINE NEEDLE ROLL WITH THE SUBGRADE.
7. PRIOR TO ROLL INSTALLATION, CONTOUR A CONCAVE TRENCH (2 – 4) INCHES DEEP ALONG THE PROPOSED INSTALLATION ROUTE. THE PINE NEEDLE ROLL SHALL BE INSTALLED ALONG THE SIDE OF WALKS AND AROUND THE CATCH BASINS. THE BOTTOM EDGE OF THE PINE NEEDLE ROLL SHALL EXTEND TO AND ACROSS THE BOTTOM OF THE TRENCH. THE TRENCH SHALL BE BACKFILLED TO 4 INCHES ABOVE GROUND AND COMPACTED TO BURY AND SECURE THE BOTTOM OF THE PINE NEEDLE ROLL.
8. CONTRACTOR SHALL MAKE INSPECTIONS WEEKLY DURING THE WET SEASON, MONTHLY DURING THE DRY SEASON AND IMMEDIATELY AFTER EACH RAINFALL TO DETERMINE IF REPAIRS AND SEDIMENT REMOVAL IS REQUIRED. SEDIMENT SHALL BE REMOVED BEFORE IT HAS REACHED ONE THIRD THE HEIGHT OF THE PINE NEEDLE ROLL.

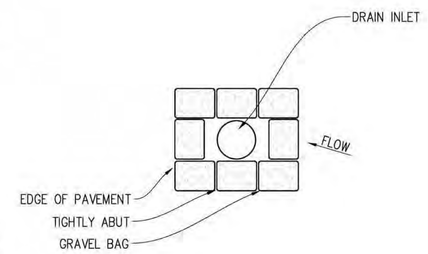

1 DRAIN INLET DETAIL
NO SCALE

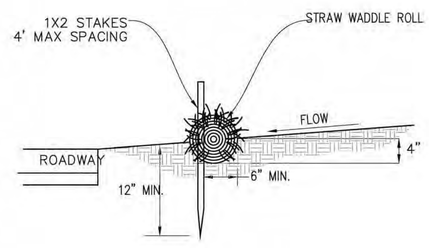

2 STRAW WADDLE ROLL DETAIL
NO SCALE

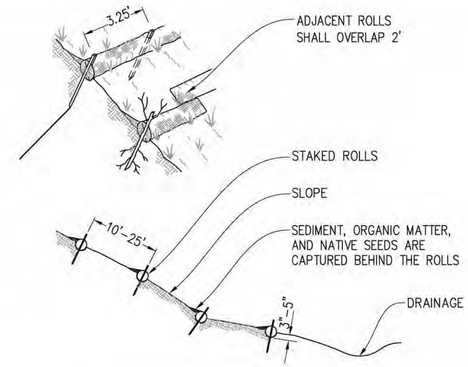

3 STRAW WADDLE DETAIL
NO SCALE

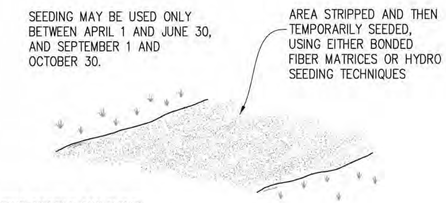

PINE NEEDLE MULCHING:

1. PINE NEEDLE MULCH SHALL BE USED.

SEEDING MIXTURES

SPECIES COMMON NAME	SPECIES BOTANICAL NAME	PLS AMOUNT PER ACRE
BLUE WILDRYE (STANISLAUS 5000 OR HIGH ELEVATION COLLECTION)	ELYMUS GLAUCUS (STAN 5000)	30
MOKELUMNE OR ELDORADO BROME (OR OTHER HIGH ELEVATION COLLECTION)	BROMUS CARINATUS (MOKELUMNE)	30
SQUIRREL TAIL HIGH ELEVATION COLLECTION	ELYMUS ELYMOIDES SSP. ELYMOIDES 9SIERRA)	40
ANTELOPE BITTERBRUSH (+5500 FT. SIERRA COLLECTION)	PURSHIA TRIDENTATA	5
MOUNTAIN SAGEBRUSH (+5500 FT. SIERRA COLLECTION)	ARTEMESIA TRIDENTATA	5
	TOTAL PLS PER ACRE RATE	106

TO PROVIDE TEMPORARY SOIL STABILIZATION BY PLANTING GRASSES AND LEGUMES TO AREAS THAT WOULD REMAIN BARE FOR MORE THAN 7 DAYS WHERE PERMANENT COVER IS NOT NECESSARY OR APPROPRIATE.

4 TEMP SEEDING & MULCHING
NO SCALE

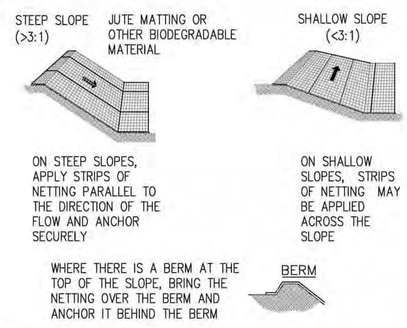

TO PROVIDE IMMEDIATE PROTECTION TO EXPOSED SOILS DURING THE PERIOD OF SHORT CONSTRUCTION DELAYS

5 MATTING/ROLLED EROSION CONTROL PRODUCTS
NO SCALE

APPROVED
EL DORADO COUNTY
PLANNING COMMISSION
DATE: May 14, 2026
EXECUTIVE SECRETARY: Karen L. Garner

Issued For:

PLACERVILLE SHERIFF

3170 GOLD NUGGET WY, PLACERVILLE, CA 95667

PREPARED FOR

verizon

2770 SHADELANDS DR, BLDG 11
WALNUT CREEK, CA 95598

Vendor:

EPIC WIRELESS GROUP LLC
Connecting a Wireless World

MDG LOCATION ID:	5000940687
PROJECT ID:	17120113
DRAWN BY:	C. COLSTON
CHECKED BY:	S. SAVIG
APPROVED BY:	J. SPORE

ISSUE STATUS

REV	DATE	DESCRIPTION	CAD
5	05/13/26	CLIENT REV	C.C.
4	02/25/26	PLANNING COMMS	T.T.
3	12/18/25	PLANNING COMMS	S.V.
4	09/30/25	CLIENT REV	S.V.
3	09/25/25	CLIENT REV	T.T.
2	02/12/24	CD 100%	S.D.
1	02/06/24	CLIENT REV	S.D.
0	01/11/24	CD 90%	C.T.C

Licensee:

REGISTERED PROFESSIONAL ENGINEER JAMES R. SPONE S6336 STRUCTURAL STATE OF CALIFORNIA

IT IS A VIOLATION OF LAW FOR ANY PERSON, UNLESS THEY ARE ACTING UNDER THE DIRECTION OF A LICENSED PROFESSIONAL ENGINEER, TO ALTER THIS DOCUMENT.

ENGINEER:

Streamline Engineering and Design, Inc.
3643 Taylor Road, Suite A, Loomis, CA 95650
Contact: Kevin Somers Phone: 916-660-1930
E-Mail: kevin@streamlineeng.com Fax: 916-660-1941

THESE PLANS AND SPECIFICATIONS, AS INSTRUMENTS OF SERVICE, ARE AND SHALL REMAIN THE PROPERTY OF STREAMLINE ENGINEERING AND DESIGN, INC. WHEN THE PROJECT FOR WHICH THEY WERE PREPARED IS COMPLETED, THESE DRAWINGS AND SPECIFICATIONS MAY BE REUSED ONLY UNDER WRITTEN AGREEMENT WITH THE ENGINEER. Copyright © 2025 STREAMLINE ENGINEERING AND DESIGN INC. ALL RIGHTS RESERVED.

SHEET TITLE:

BMP DETAILS & NOTES

SHEET NUMBER:

BMP2