DIST	COUNTY	ROUTE	KILOMETER POSTS TOTAL PROJECT	SHEET NO.	TOTAL SHEETS
03	ED	49	11.86/12.4	46	136

The state of California or its officers or agents shall not be responsible for the accuracy or completeness of electronic copies of this plan sheet

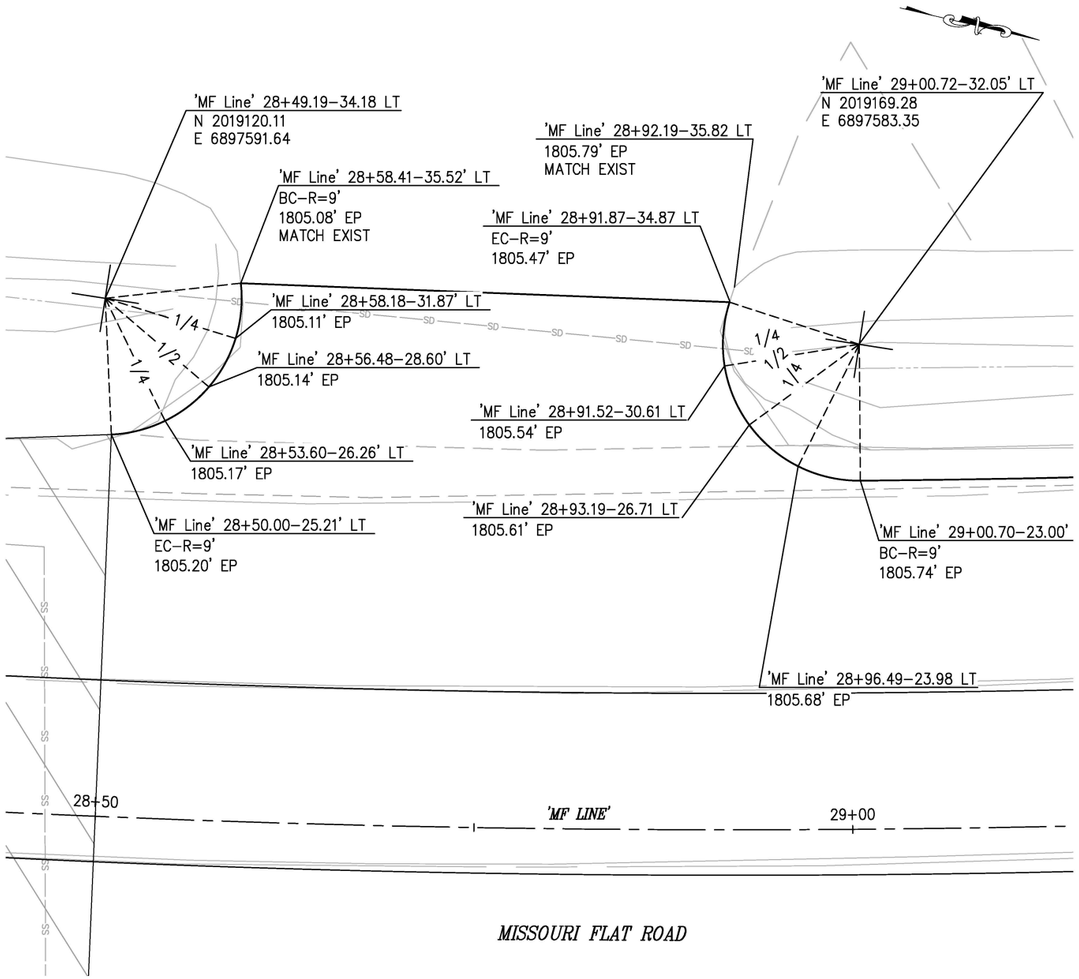

DWY #5 DETAIL

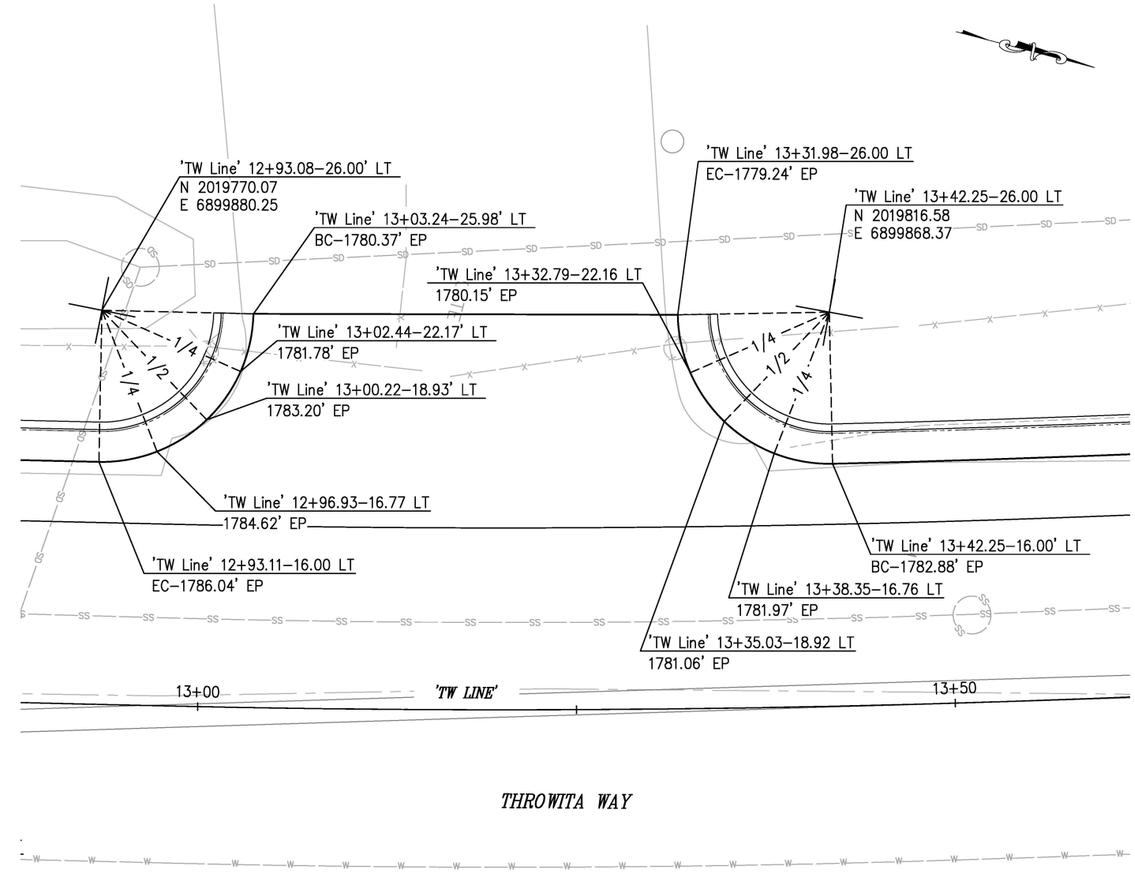

DWY #6 DETAIL

CONSTRUCTION DETAILS
DRIVEWAY DETAIL
SCALE : 1" = 5'

CU ####	EA 03–0E961

REVISION			
NUMBER	DATE	DESCRIPTION	BY

REGISTERED PROFESSIONAL ENGINEER — DUSTIN W. HARRINGTON — No. C71517 — License Expires 12-31-25 — CIVIL — STATE OF CALIFORNIA

PREPARED UNDER THE SUPERVISION OF :

REGISTERED CIVIL ENGINEER 1/28/2025
DATE:

DESIGNED: DH	DRAWN: AN
CHECKED: JN	DATE: 1/28/2025
ROAD NUMBER:	

EL DORADO COUNTY CALIFORNIA

COUNTY OF EL DORADO
DEPARTMENT OF TRANSPORTATION

DIAMOND SPRINGS PARKWAY
PHASE 1B

25-0053 E 1 of 45

SHEET **C-26**
46 OF 136
W.O. No. **72334**

ORIGINAL SCALE IS IN INCHES
Drawing name: Z:\Civil 3D Projects\72334 Diamond Springs Pkwy\CADD Files\Sheets\Ultimate\C Sheets.dwg Layout Tab: C-26 Jan 16,2025 – 11:35pm DHarrington

FOR REDUCED PLANS 0 1 2

DIST	COUNTY	ROUTE	KILOMETER POSTS TOTAL PROJECT	SHEET NO.	TOTAL SHEETS
03	ED	49	11.86/12.4	47	136

The state of California or its officers or agents shall not be responsible for the accuracy or completeness of electronic copies of this plan sheet

NOTES:

STATION / OFFSET DATA PER 'PV' LINE.

ABBREVIATIONS:

FG–FINISH GRADE
FL–FLOWLINE
TBW–TOP BACK OF WALK
TBC–TOP BACK OF CURB
VG–VALLEY GUTTER
AP–ANGLE POINT
(E)–EXISTING

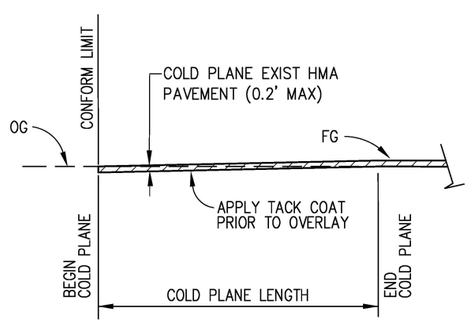

COLD PLANE DETAIL

NO SCALE

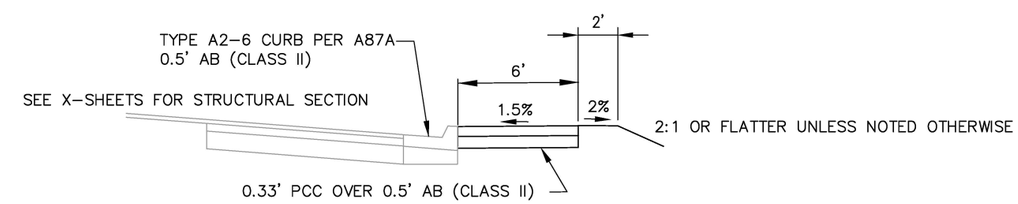

SIDEWALK DETAIL

NO SCALE

CONSTRUCTION DETAILS
MISCELLANEOUS DETAILS
NO SCALE

CU ####	EA 03–0E961

REVISION			
NUMBER	DATE	DESCRIPTION	BY

REGISTERED PROFESSIONAL ENGINEER DUSTIN W. HARRINGTON No. C71517 License Expires 12–31–25 CIVIL STATE OF CALIFORNIA

PREPARED UNDER THE SUPERVISION OF :
REGISTERED CIVIL ENGINEER
1/28/2025
DATE:

DESIGNED: DH	DRAWN: AN
CHECKED: JN	DATE: 1/28/2025
ROAD NUMBER:	

EL DORADO COUNTY CALIFORNIA

COUNTY OF EL DORADO
DEPARTMENT OF TRANSPORTATION

DIAMOND SPRINGS PARKWAY
PHASE 1B
25-0053 E 2 of 45

SHEET **C-27**
47 OF 136
W.O. No. **72334**

FOR REDUCED PLANS 0 1 2
ORIGINAL SCALE IS IN INCHES
Drawing name: Z:\Civil 3D Projects\72334 Diamond Springs Pkwy\CADD Files\Sheets\Ultimate\C Sheets.dwg Layout Tab: C-27 Jan 16,2025 – 11:34pm DHarrington

DIST	COUNTY	ROUTE	KILOMETER POSTS TOTAL PROJECT	SHEET NO.	TOTAL SHEETS
03	ED	49	11.86/12.4	48	136

The state of California or its officers or agents shall not be responsible for the accuracy or completeness of electronic copies of this plan sheet

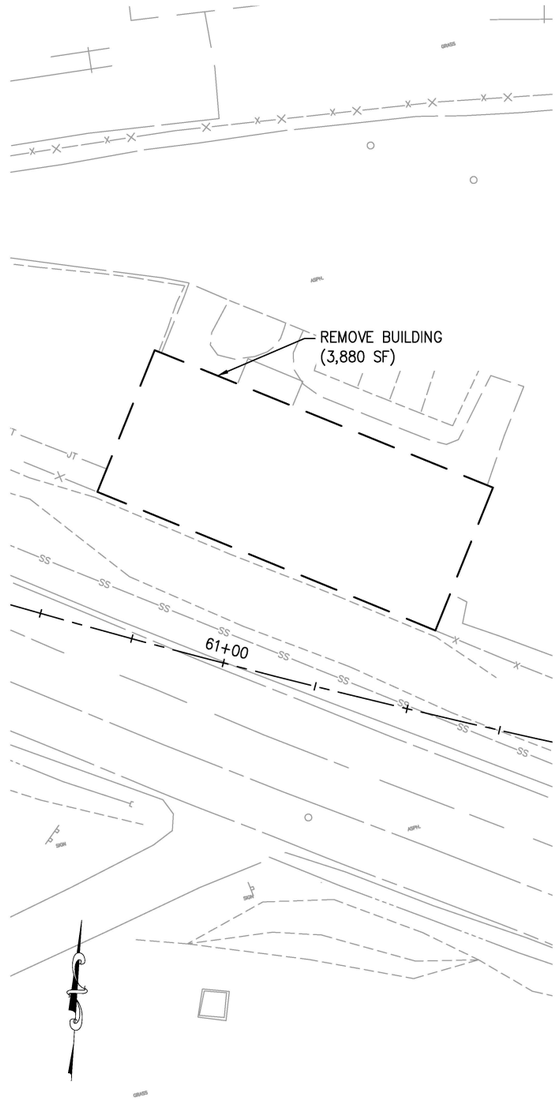

4429 MISSOURI FLAT ROAD

SCALE: 1"=20'

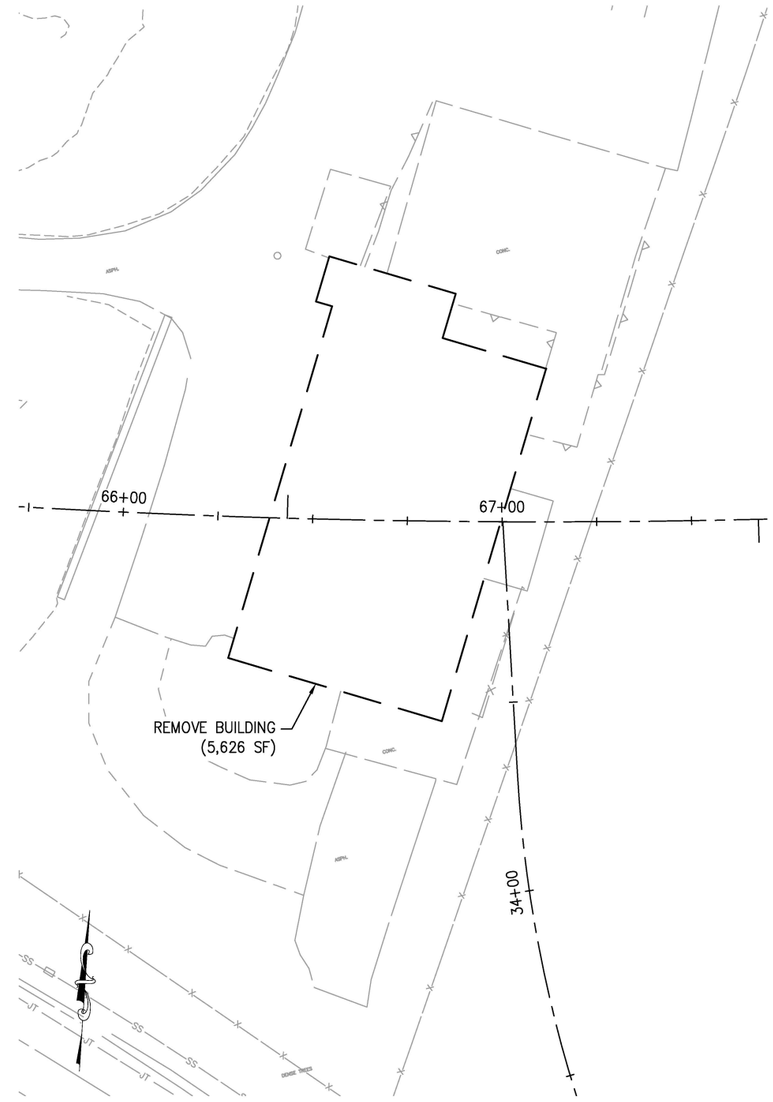

4451 MISSOURI FLAT ROAD

SCALE: 1"=20'

CONSTRUCTION NOTES:

1. — EXIST 1,250 GAL SEPTIC TANK #1
2. — EXIST 1,200 GAL SEPTIC TANK #2
3. — EXIST LEACH LINES (4" DIA SDR 35 PPP x 90') TO BE RELOCATED
4. — PROPOSED LEACH FIELD RELOCATION AREA

NOTE:
EXISTING SEPTIC SYSTEM CONSTRUCTED IN 2009 BY DALE MILLER PLUMBING & SEPTIC PLACERVILLE, CA.

BUILDING REMOVAL
SCALE : AS SHOWN

CU ####	EA 03-0E961

REVISION			
NUMBER	DATE	DESCRIPTION	BY

REGISTERED PROFESSIONAL ENGINEER DUSTIN W. HARRINGTON No. C71517 License Expires 12-31-25 CIVIL STATE OF CALIFORNIA

PREPARED UNDER THE SUPERVISION OF :

REGISTERED CIVIL ENGINEER 1/28/2025 DATE:

DESIGNED: AN	DRAWN: AN
CHECKED: DH	DATE: 1/28/2025
ROAD NUMBER:	

EL DORADO COUNTY CALIFORNIA

COUNTY OF EL DORADO
DEPARTMENT OF TRANSPORTATION

DIAMOND SPRINGS PARKWAY
PHASE 1B

25-0053 E 3 of 45

SHEET **BR-1**
48 OF 136
W.O. No. **72334**

FOR REDUCED PLANS
0 1 2
ORIGINAL SCALE IS IN INCHES
Drawing name: Z:\Civil 3D Projects\72334 Diamond Springs Pkwy\CADD Files\Sheets\Ultimate\BR Sheets.dwg Layout Tab: BR-1 Jan 16,2025 – 10:46pm DHarrington

DIST	COUNTY	ROUTE	KILOMETER POSTS TOTAL PROJECT	SHEET NO.	TOTAL SHEETS
03	ED	49	11.86/12.4	49	136

The state of California or its officers or agents shall not be responsible for the accuracy or completeness of electronic copies of this plan sheet

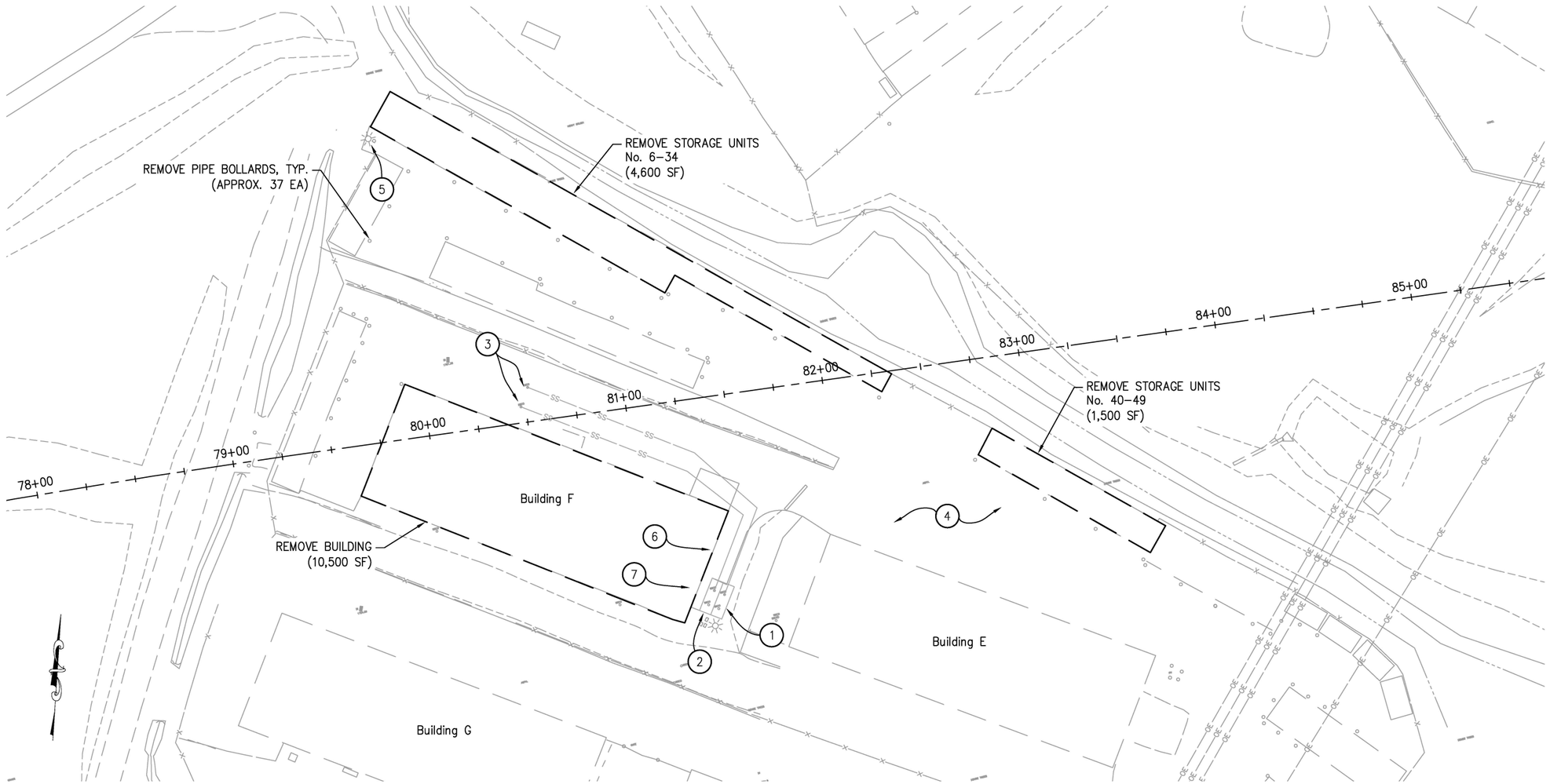

4066 STAGE COURT

SCALE: 1"=40'

CONSTRUCTION NOTES:

1. — EXIST 1,250 GAL SEPTIC TANK #1
2. — EXIST 1,200 GAL SEPTIC TANK #2
3. — EXIST LEACH LINES (4" DIA SDR 35 PPP x 90') TO BE RELOCATED
4. — PROPOSED LEACH FIELD RELOCATION AREA
5. — REMOVE LUMINAIRE, CAMERA, AND POST (NOT OPERABLE OR ENERGIZED)
6. — COORDINATE WITH PG&E TO REMOVE EXISTING (5) ELECTRIC METERS AT SERVICE CONNECTION. REMOVE EXISTING CONDUCTORS TO SERVICE POINT OR SPLICED CONNECTION.
7. — CAP EXISTING WATER SERVICE AND INSTALL MARKER POST.

NOTES:

1. EXISTING SEPTIC SYSTEM CONSTRUCTED IN 2009 BY DALE MILLER PLUMBING & SEPTIC, PLACERVILLE.
2. REMOVE ALL PLUMBING LINES FROM BUILDING F TO SEPTIC TANK.

BUILDING REMOVAL
SCALE : AS SHOWN

CU ####	EA 03–0E961

REVISION			
NUMBER	DATE	DESCRIPTION	BY

REGISTERED PROFESSIONAL ENGINEER — DUSTIN W. HARRINGTON — No. C71517 — License Expires 12–31–25 — CIVIL — STATE OF CALIFORNIA

PREPARED UNDER THE SUPERVISION OF :

REGISTERED CIVIL ENGINEER

DATE: 1/28/2025

DESIGNED: AN	DRAWN: AN
CHECKED: DH	DATE: 1/28/2025
ROAD NUMBER:	

EL DORADO COUNTY CALIFORNIA

COUNTY OF EL DORADO
DEPARTMENT OF TRANSPORTATION

DIAMOND SPRINGS PARKWAY
PHASE 1B

25-0053 E 4 of 45

SHEET **BR-2**
49 OF 136
W.O. No. **72334**

ORIGINAL SCALE IS IN INCHES
FOR REDUCED PLANS 0 1 2
Drawing name: Z:\Civil 3D Projects\72334 Diamond Springs Pkwy\CADD Files\Sheets\Ultimate\BR Sheets.dwg Layout Tab: BR-2 Jan 16,2025 – 10:45pm DHarrington

DIST	COUNTY	ROUTE	KILOMETER POSTS TOTAL PROJECT	SHEET NO.	TOTAL SHEETS
03	ED	49	11.86/12.4	50	136

The state of California or its officers or agents shall not be responsible for the accuracy or completeness of electronic copies of this plan sheet

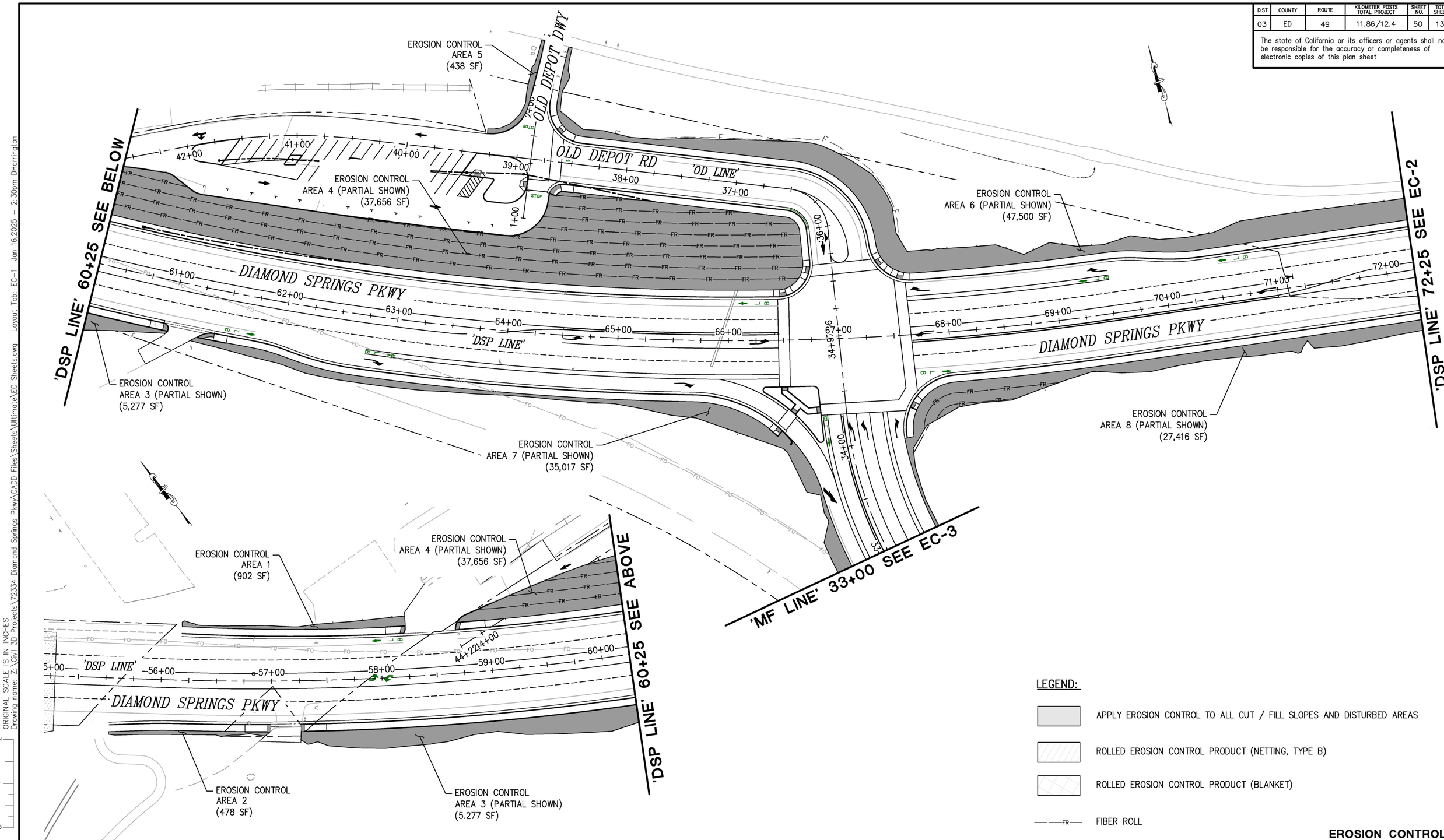

LEGEND:

- APPLY EROSION CONTROL TO ALL CUT / FILL SLOPES AND DISTURBED AREAS
- ROLLED EROSION CONTROL PRODUCT (NETTING, TYPE B)
- ROLLED EROSION CONTROL PRODUCT (BLANKET)
- —FR— FIBER ROLL

EROSION CONTROL
SCALE : 1" = 40'

CU ####	EA 03-0E961

REVISION			
NUMBER	DATE	DESCRIPTION	BY

REGISTERED PROFESSIONAL ENGINEER DUSTIN W. HARRINGTON No. C71517 License Expires 12-31-25 CIVIL STATE OF CALIFORNIA

PREPARED UNDER THE SUPERVISION OF :

REGISTERED CIVIL ENGINEER 1/28/2025 DATE:

DESIGNED: DH	DRAWN: AN
CHECKED: JN	DATE: 1/28/2025
ROAD NUMBER:	

EL DORADO COUNTY CALIFORNIA

COUNTY OF EL DORADO
DEPARTMENT OF TRANSPORTATION

DIAMOND SPRINGS PARKWAY
PHASE 1B

25-0053 E 5 of 45

SHEET **EC-1**
50 OF 136
W.O. No. **72334**

ORIGINAL SCALE IS IN INCHES
FOR REDUCED PLANS 0 1 2

Drawing name: Z:\Civil 3D Projects\72334 Diamond Springs Pkwy\CADD Files\Sheets\Ultimate\EC Sheets.dwg Layout Tab: EC-1 Jan 16,2025 – 2:30pm DHarrington

DIST	COUNTY	ROUTE	KILOMETER POSTS TOTAL PROJECT	SHEET NO.	TOTAL SHEETS
03	ED	49	11.86/12.4	51	136

The state of California or its officers or agents shall not be responsible for the accuracy or completeness of electronic copies of this plan sheet

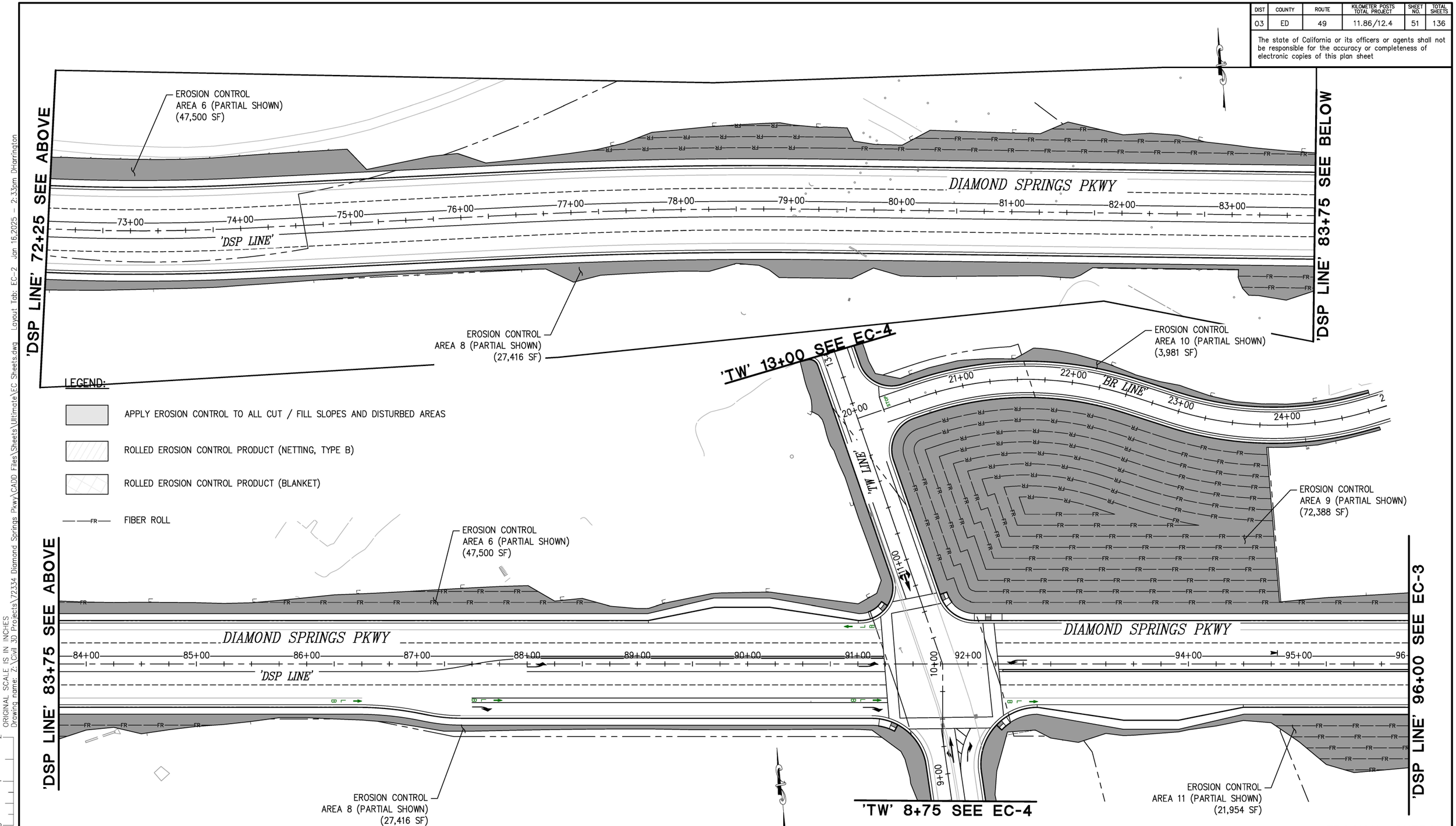

LEGEND:

- APPLY EROSION CONTROL TO ALL CUT / FILL SLOPES AND DISTURBED AREAS
- ROLLED EROSION CONTROL PRODUCT (NETTING, TYPE B)
- ROLLED EROSION CONTROL PRODUCT (BLANKET)
- FIBER ROLL

EROSION CONTROL
SCALE : 1" = 40'

CU ####	EA 03-0E961

ORIGINAL SCALE IS IN INCHES
Drawing name: Z:\Civil 3D Projects\72334 Diamond Springs Pkwy\CADD Files\Sheets\Ultimate\EC Sheets.dwg Layout Tab: EC-2 Jan 16,2025 – 2:33pm DHarrington

FOR REDUCED PLANS 0 1 2

REVISION			
NUMBER	DATE	DESCRIPTION	BY

REGISTERED PROFESSIONAL ENGINEER DUSTIN W. HARRINGTON No. C71517 License Expires 12-31-25 CIVIL STATE OF CALIFORNIA

PREPARED UNDER THE SUPERVISION OF :
REGISTERED CIVIL ENGINEER
DATE: 1/28/2025

DESIGNED: DH	DRAWN: AN
CHECKED: JN	DATE: 1/28/2025
ROAD NUMBER:	

EL DORADO COUNTY CALIFORNIA

COUNTY OF EL DORADO
DEPARTMENT OF TRANSPORTATION

DIAMOND SPRINGS PARKWAY
PHASE 1B

SHEET **EC-2**
51 OF 136
W.O. No. **72334**

DIST	COUNTY	ROUTE	KILOMETER POSTS TOTAL PROJECT	SHEET NO.	TOTAL SHEETS
03	ED	49	11.86/12.4	52	136

The state of California or its officers or agents shall not be responsible for the accuracy or completeness of electronic copies of this plan sheet

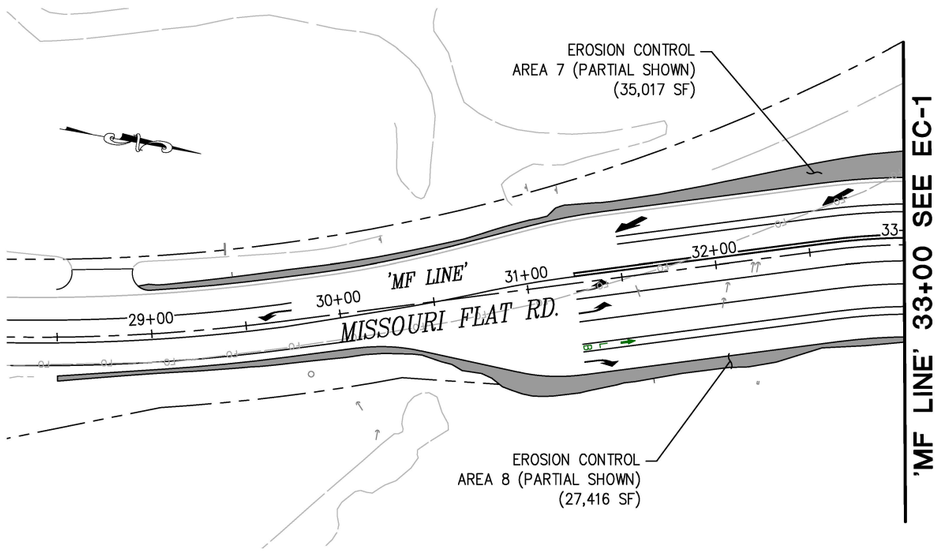

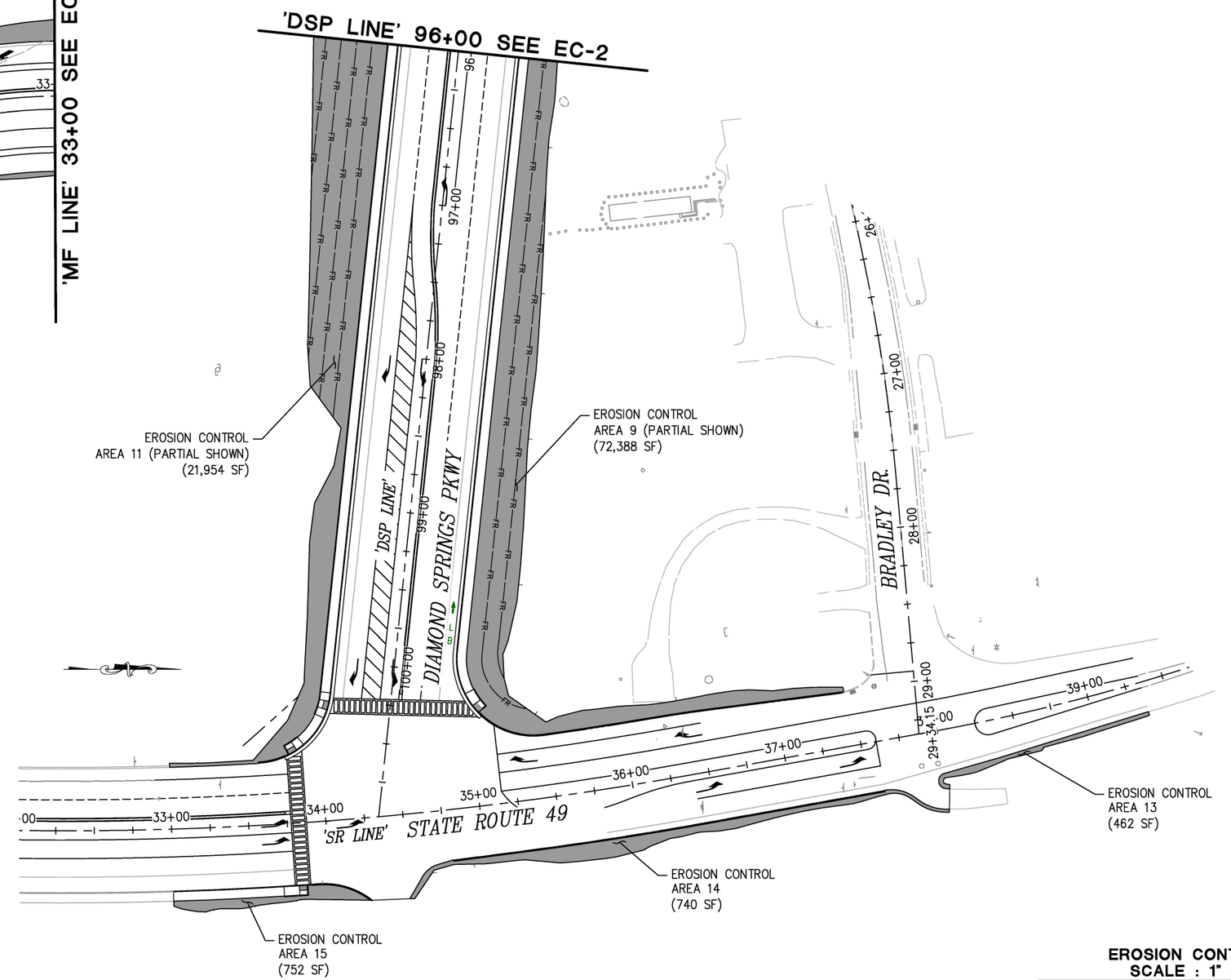

LEGEND:

- APPLY EROSION CONTROL TO ALL CUT / FILL SLOPES AND DISTURBED AREAS
- ROLLED EROSION CONTROL PRODUCT (NETTING, TYPE B)
- ROLLED EROSION CONTROL PRODUCT (BLANKET)
- —FR— FIBER ROLL

EROSION CONTROL
SCALE : 1" = 40'

CU ####	EA 03-0E961

ORIGINAL SCALE IS IN INCHES
FOR REDUCED PLANS 0 1 2

Drawing name: Z:\Civil 3D Projects\72334 Diamond Springs Pkwy\CADD Files\Sheets\Ultimate\EC Sheets.dwg Layout Tab: EC-3 Jan 16,2025 – 2:34pm DHarrington

REVISION			
NUMBER	DATE	DESCRIPTION	BY

REGISTERED PROFESSIONAL ENGINEER DUSTIN W. HARRINGTON No. C71517 License Expires 12-31-25 CIVIL STATE OF CALIFORNIA

PREPARED UNDER THE SUPERVISION OF :
REGISTERED CIVIL ENGINEER
1/28/2025
DATE:

DESIGNED: DH	DRAWN: AN
CHECKED: JN	DATE: 1/28/2025
ROAD NUMBER:	

EL DORADO COUNTY CALIFORNIA

COUNTY OF EL DORADO
DEPARTMENT OF TRANSPORTATION

DIAMOND SPRINGS PARKWAY
PHASE 1B

25-0053 E 7 of 45

SHEET
EC-3
52 OF 136
W.O. No. **72334**

DIST	COUNTY	ROUTE	KILOMETER POSTS TOTAL PROJECT	SHEET NO.	TOTAL SHEETS
03	ED	49	11.86/12.4	53	136

The state of California or its officers or agents shall not be responsible for the accuracy or completeness of electronic copies of this plan sheet

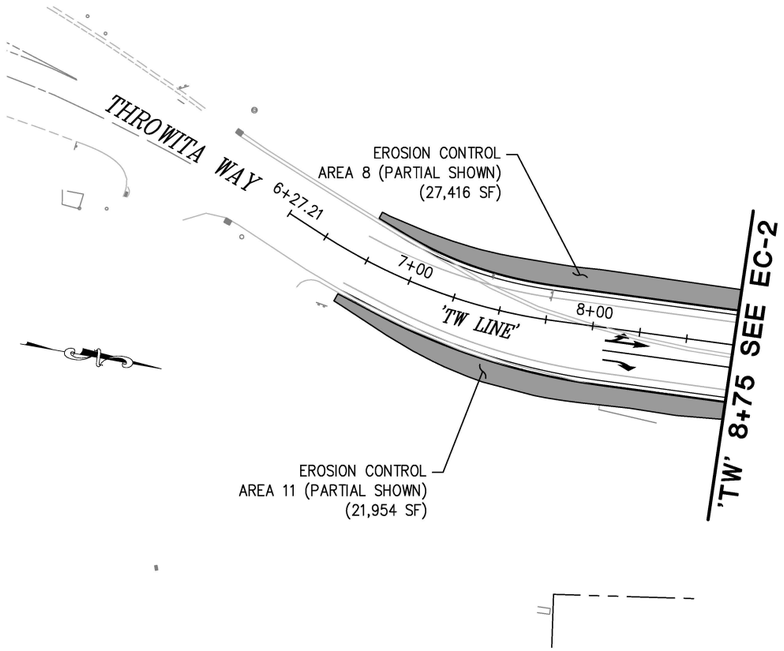

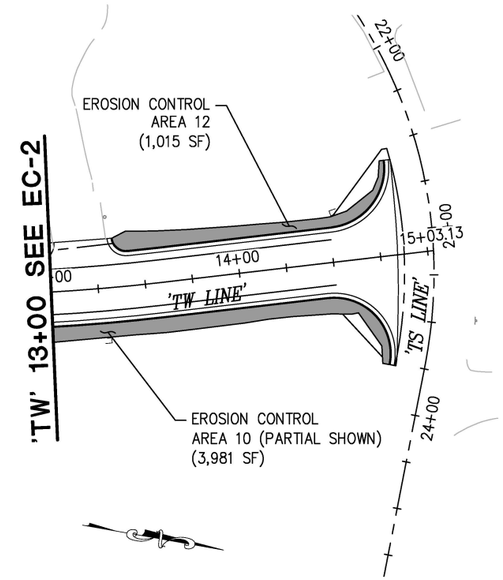

LEGEND:

- APPLY EROSION CONTROL TO ALL CUT / FILL SLOPES AND DISTURBED AREAS
- ROLLED EROSION CONTROL PRODUCT (NETTING, TYPE B)
- ROLLED EROSION CONTROL PRODUCT (BLANKET)
- —FR— FIBER ROLL

ORIGINAL SCALE IS IN INCHES
FOR REDUCED PLANS 0 1 2

Drawing name: Z:\Civil 3D Projects\72334 Diamond Springs Pkwy\CADD Files\Sheets\Ultimate\EC Sheets.dwg Layout Tab: EC-4 Jan 16,2025 – 2:35pm DHarrington

EROSION CONTROL
SCALE : 1" = 40'

CU ####	EA 03-0E961

REVISION			
NUMBER	DATE	DESCRIPTION	BY

REGISTERED PROFESSIONAL ENGINEER DUSTIN W. HARRINGTON No. C71517 License Expires 12-31-25 CIVIL STATE OF CALIFORNIA

PREPARED UNDER THE SUPERVISION OF :
REGISTERED CIVIL ENGINEER
1/28/2025
DATE:

DESIGNED: DH	DRAWN: AN
CHECKED: JN	DATE: 1/28/2025
ROAD NUMBER:	

EL DORADO COUNTY CALIFORNIA

COUNTY OF EL DORADO
DEPARTMENT OF TRANSPORTATION

DIAMOND SPRINGS PARKWAY
PHASE 1B
25-0053 E 8 of 45

SHEET **EC-4**
53 OF 136
W.O. No. **72334**

DIST	COUNTY	ROUTE	KILOMETER POSTS TOTAL PROJECT	SHEET NO.	TOTAL SHEETS
03	ED	49	11.86/12.4	54	136

The state of California or its officers or agents shall not be responsible for the accuracy or completeness of electronic copies of this plan sheet

EROSION CONTROL

SEQUENCE	ITEM	MATERIAL	MATERIAL TYPE	APPLICATION RATE
STEP 1	HYDROSEED	SEED	MIX	20 LB/ACRE
		FIBER	WOOD	1,000 LB/ACRE
		FERTILIZER	ORGANIC	600 LB/ACRE
STEP 2	STRAW	STRAW	RICE	3,500 LB/ACRE
STEP 3	HYDROMULCH	FIBER	WOOD	1,000 LB/ACRE
		TACKIFIER	PSYLLIUM	200 LB/ACRE

FIBER ROLLS

SEQUENCE	ITEM	MATERIAL	MATERIAL TYPE	REMARKS
AT EC AREAS WHERE SHOWN, INSTALL FIBER ROLLS BEFORE HYDROSEED	FIBER ROLLS	FIBER ROLL	8" TO 10" DIA.	TYPE 1 INSTALLATION

EROSION CONTROL QUANTITIES

LOCATION	FIBER ROLLS (LF)	EROSION CONTROL (SQFT)	HYDROSEED (LB)	STRAW (LB)	HYDROMULCH (LB)	SHEET(S)
AREA 1		902	34	72	25	EC-1
AREA 2		478	18	38	13	EC-1
AREA 3		5,277	196	424	145	EC-1
AREA 4	3,338	37,656	1,400	3,026	1,037	EC-1
AREA 5		438	16	35	12	EC-1
AREA 6	427	47,500	1,767	3,817	1,309	EC-1, EC-2
AREA 7		35,017	1,302	2,814	965	EC-1, EC-3
AREA 8	283	27,146	1,010	2,181	748	EC-1, EC-2, EC-4
AREA 9	6,814	72,388	2,692	5,816	1,994	EC-2, EC-3
AREA 10		3,981	148	320	110	EC-2, EC-4
AREA 11	1,213	21,954	816	1,764	605	EC-2, EC-3
AREA 12		1,015	38	82	28	EC-4
AREA 13		462	17	37	13	EC-3
AREA 14		740	28	59	20	EC-3
AREA 15		752	28	60	21	EC-3

SEED MIX

BOTANICAL NAME (COMMON NAME)	POUNDS PURE LIVE SEED PER ACRE (SLOPE MEASUREMENT)	LOCATION
ACHILLEA MILLEFOLIUM (COMMON YARROW)	2	AS SHOWN ON PLANS
ELYMUS GLAUCUS (BLUE WILDRYE)	7	AS SHOWN ON PLANS
AGROSTIS EXARATA (SPIKE BENTGRASS)	3	AS SHOWN ON PLANS
POA SECUNDA (SANDBERG BLUEGRASS)	3	AS SHOWN ON PLANS
ACMISPON AMERICANUS (SPANISH LOTUS)	2	AS SHOWN ON PLANS
FESTUCA MICROSTACHYS (SMALL FESCUE)	1	AS SHOWN ON PLANS
BROMOS LAEVIPES (WOODLAND BROME)	2	AS SHOWN ON PLANS
TOTAL	20	

SEED SOURCE MUST ORIGINATE FROM NORTHERN CALIFORNIA SACRAMENTO VALLEY AND/OR SIERRA FOOTHILLS REGIONS.

ORIGINAL SCALE IS IN INCHES
Drawing name: Z:\Civil 3D Projects\72334 Diamond Springs Pkwy\CADD Files\Sheets\Ultimate\EC Sheets.dwg Layout Tab: EC-5 Jan 16,2025 – 2:35pm DHarrington

0 1 2

FOR REDUCED PLANS

REVISION			
NUMBER	DATE	DESCRIPTION	BY

REGISTERED PROFESSIONAL ENGINEER DUSTIN W. HARRINGTON No. C71517 License Expires 12-31-25 CIVIL STATE OF CALIFORNIA

PREPARED UNDER THE SUPERVISION OF :
REGISTERED CIVIL ENGINEER
DATE: 1/28/2025

DESIGNED: DH	DRAWN: AN
CHECKED: JN	DATE: 1/28/2025
ROAD NUMBER:	

EL DORADO COUNTY CALIFORNIA

COUNTY OF EL DORADO
DEPARTMENT OF TRANSPORTATION

DIAMOND SPRINGS PARKWAY
PHASE 1B

EROSION CONTROL
SCALE : 1" = 40'

CU ####
EA 03-0E961

SHEET EC-5
54 OF 136
W.O. No. 72334

DIST	COUNTY	ROUTE	KILOMETER POSTS TOTAL PROJECT	SHEET NO.	TOTAL SHEETS
03	ED	49	11.86/12.4	55	136

The state of California or its officers or agents shall not be responsible for the accuracy or completeness of electronic copies of this plan sheet

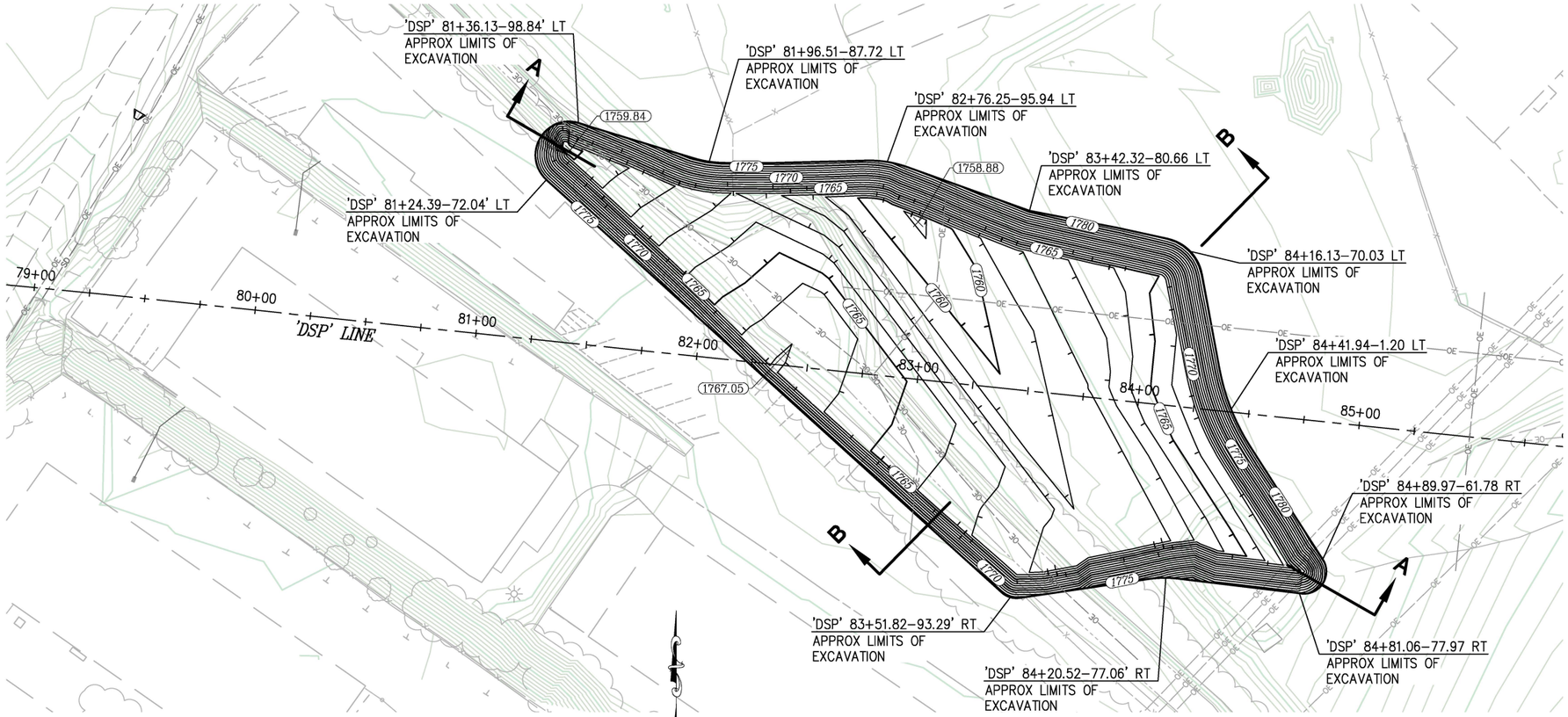

PLAN

SCALE: 1"=30'

WEST EXCAVATION SITE NOTES:

1. EXCAVATION SIDE SLOPES SHALL BE 1:1
2. APPROXIMATE EXCAVATION VOLUME=15,878 C.Y.

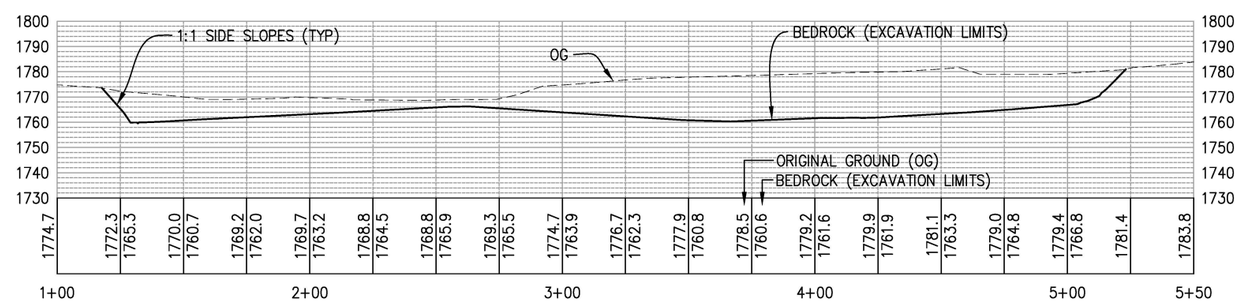

SECTION A-A

SCALE: 1"=30' H,V

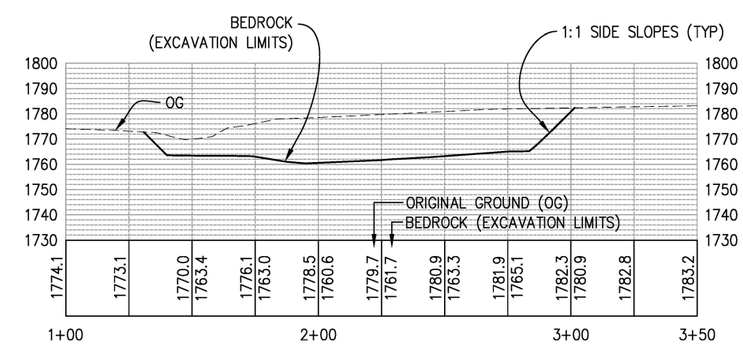

SECTION B-B

SCALE: 1"=30' H,V

REMEDIATION GRADING PLAN
WEST EXCAVATION SITE
SCALE : AS SHOWN

CU #### | EA 03–0E961

ORIGINAL SCALE IS IN INCHES
Drawing name: Z:\Civil 3D Projects\72334 Diamond Springs Pkwy\CADD Files\Sheets\Ultimate\G-Sheets.dwg Layout Tab: G-1 Jan 16,2025 – 3:16pm DHarrington

FOR REDUCED PLANS 0 1 2

REVISION			
NUMBER	DATE	DESCRIPTION	BY

REGISTERED PROFESSIONAL ENGINEER DUSTIN W. HARRINGTON No. C71517 License Expires 12-31-25 CIVIL STATE OF CALIFORNIA

PREPARED UNDER THE SUPERVISION OF :
REGISTERED CIVIL ENGINEER
DATE: 1/28/2025

DESIGNED: DH	DRAWN: AN
CHECKED: JN	DATE: 1/28/2025
ROAD NUMBER:	

EL DORADO COUNTY CALIFORNIA

COUNTY OF EL DORADO
DEPARTMENT OF TRANSPORTATION

DIAMOND SPRINGS PARKWAY
PHASE 1B
25-0053 E 10 of 45

SHEET **G-1**
55 OF 136
W.O. No. **72334**

DIST	COUNTY	ROUTE	KILOMETER POSTS TOTAL PROJECT	SHEET NO.	TOTAL SHEETS
03	ED	49	11.86/12.4	56	136

The state of California or its officers or agents shall not be responsible for the accuracy or completeness of electronic copies of this plan sheet

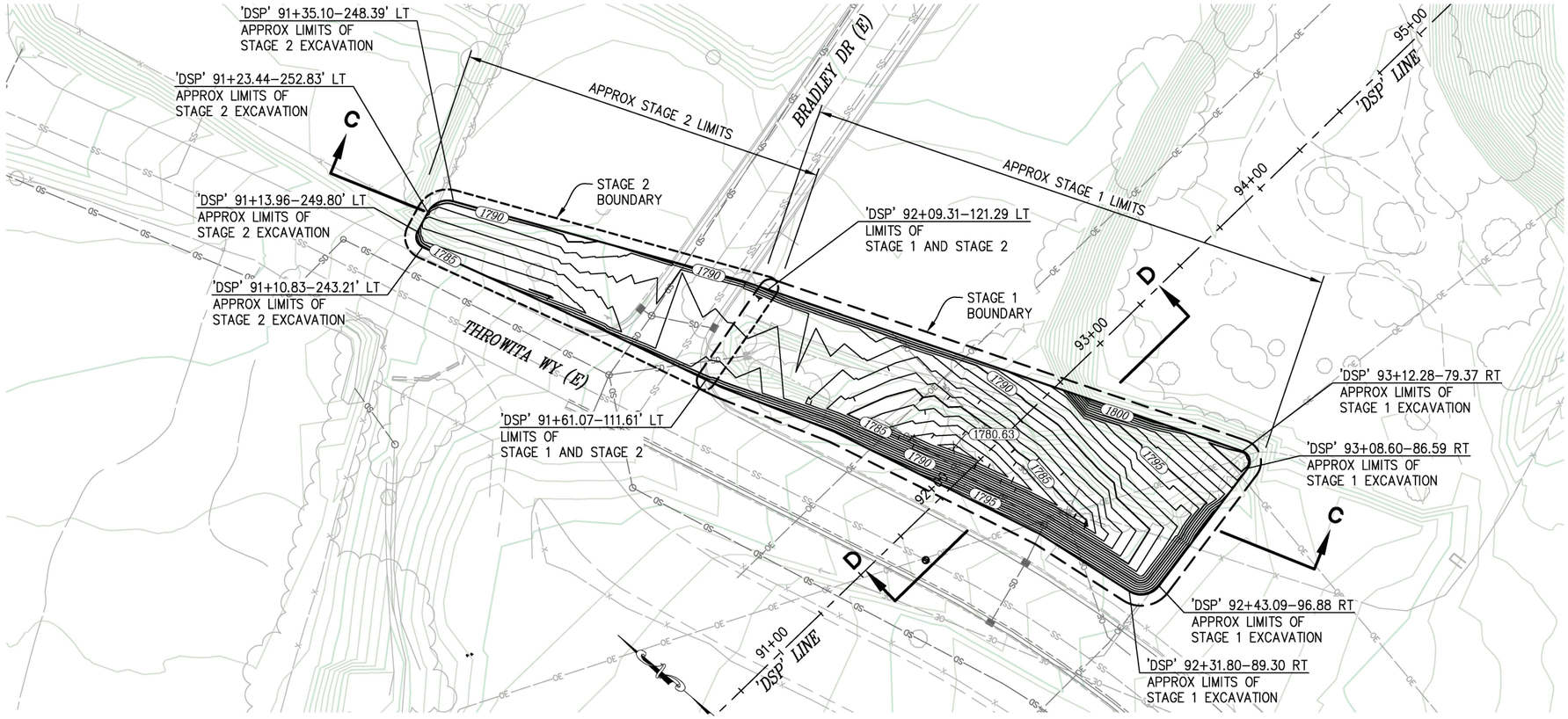

PLAN

SCALE: 1"=30'

EAST EXCAVATION SITE NOTES:

1. EXCAVATION SHALL BE COMPLETED IN TWO STAGES AS SHOWN
2. EXCAVATION SIDE SLOPES SHALL BE 1:1
3. APPROXIMATE EXCAVATION VOLUME:
   STAGE 1 = ±2787 C.Y.
   STAGE 2 = ±353 C.Y.
   TOTAL = ±3,140 C.Y.

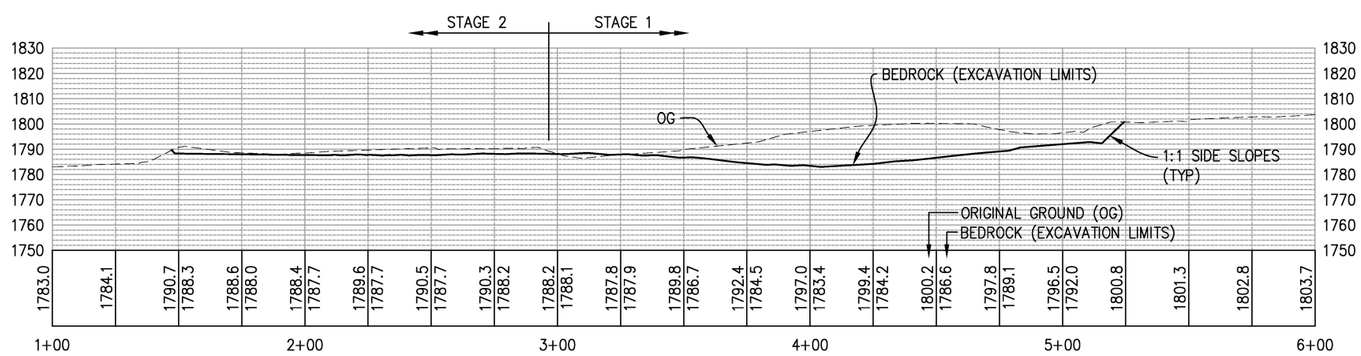

SECTION C-C

SCALE: 1"=30' H,V

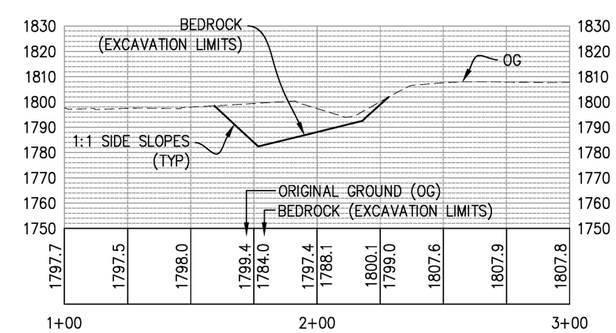

SECTION D-D

SCALE: 1"=30' H,V

REMEDIATION GRADING PLAN
EAST EXCAVATION SITE
SCALE : AS SHOWN

CU ####	EA 03–0E961

REVISION			
NUMBER	DATE	DESCRIPTION	BY

REGISTERED PROFESSIONAL ENGINEER DUSTIN W. HARRINGTON No. C71517 License Expires 12-31-25 CIVIL STATE OF CALIFORNIA

PREPARED UNDER THE SUPERVISION OF :

REGISTERED CIVIL ENGINEER

1/28/2025
DATE:

DESIGNED: DH	DRAWN: AN
CHECKED: JN	DATE: 1/28/2025
ROAD NUMBER:	

EL DORADO COUNTY CALIFORNIA

COUNTY OF EL DORADO
DEPARTMENT OF TRANSPORTATION

DIAMOND SPRINGS PARKWAY
PHASE 1B
25-0053 E 11 of 45

SHEET
G-2
56 OF 136
W.O. No. **72334**

ORIGINAL SCALE IS IN INCHES
Drawing name: Z:\Civil 3D Projects\72334 Diamond Springs Pkwy\CADD Files\Sheets\Ultimate\G-Sheets.dwg Layout Tab: G-2 Jan 16,2025 – 3:17pm DHarrington
0 1 2
FOR REDUCED PLANS

DIST	COUNTY	ROUTE	KILOMETER POSTS TOTAL PROJECT	SHEET NO.	TOTAL SHEETS
03	ED	49	11.86/12.4	57	136

The state of California or its officers or agents shall not be responsible for the accuracy or completeness of electronic copies of this plan sheet

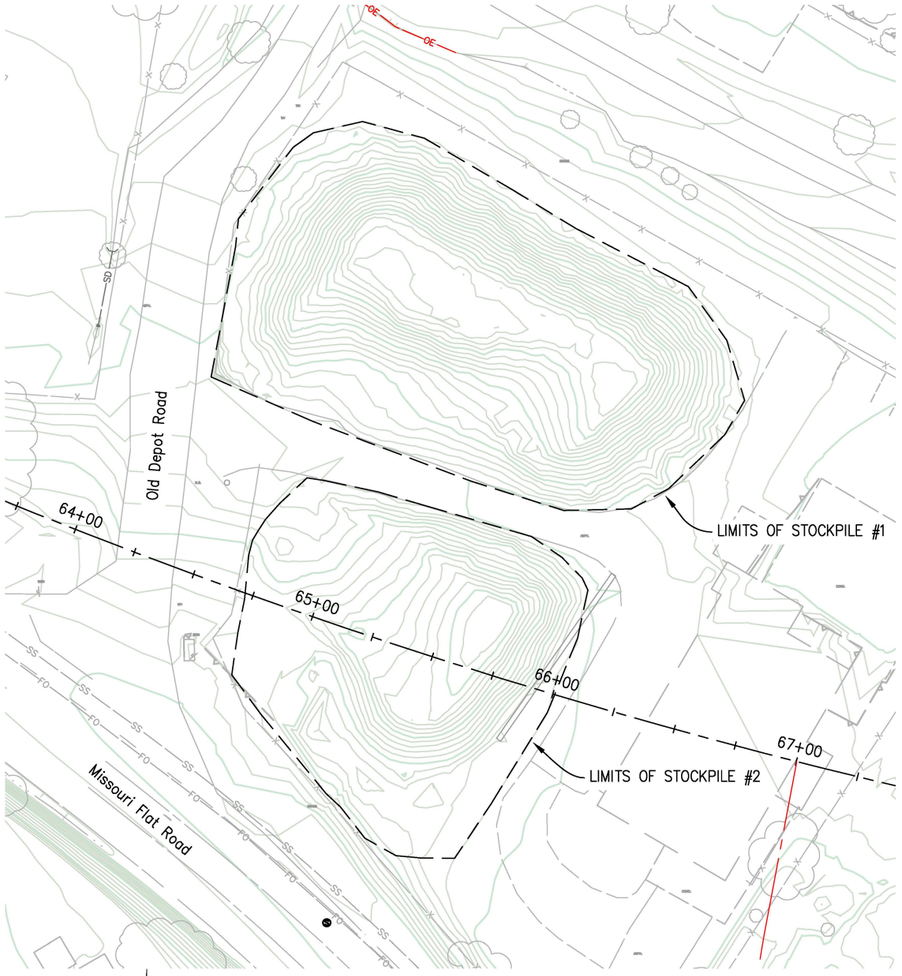

EXISTING STOCKPILES 1 & 2

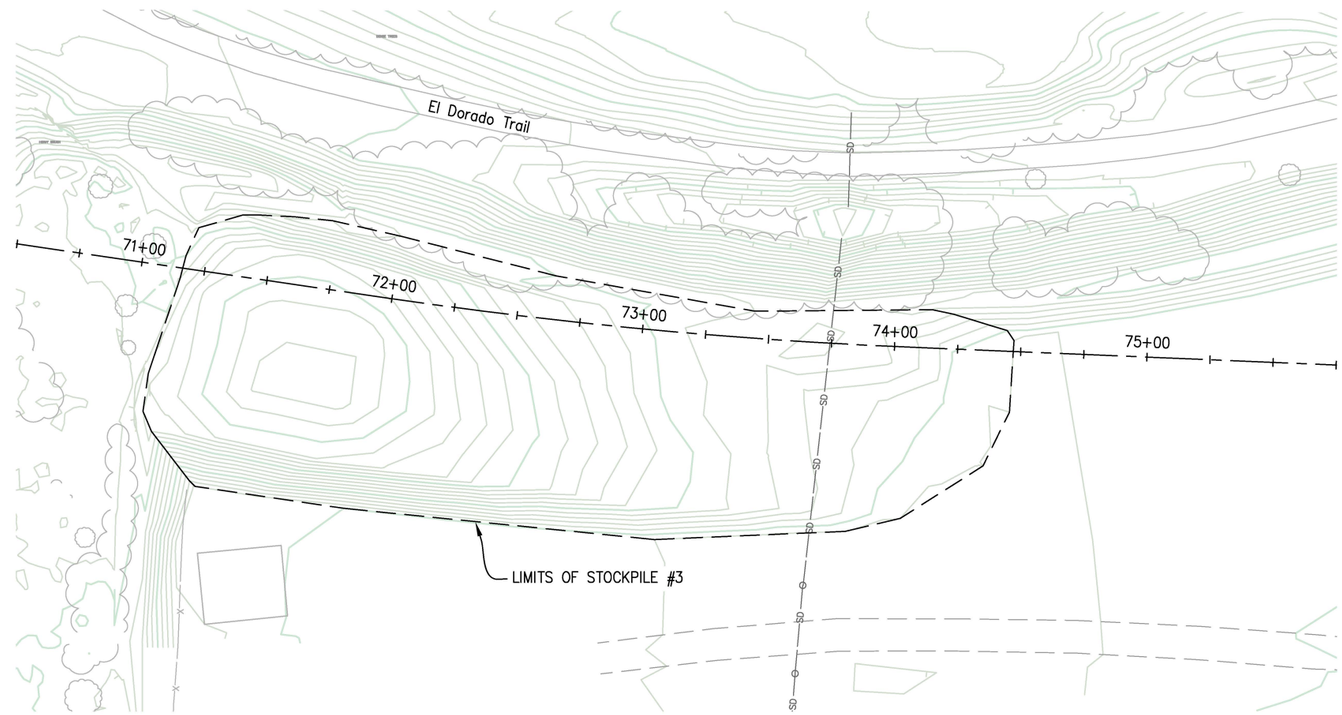

EXISTING STOCKPILE 3

GRADING PLAN
EXISTING STOCKPILE LOCATIONS
SCALE : 1" = 30'

CU ####
EA 03-0E961

ORIGINAL SCALE IS IN INCHES
Drawing name: Z:\Civil 3D Projects\72334 Diamond Springs Pkwy\CADD Files\Sheets\Ultimate\G-Sheets.dwg Layout Tab: G-3 Jan 16,2025 - 3:23pm DHarrington

FOR REDUCED PLANS 0 1 2

REVISION			
NUMBER	DATE	DESCRIPTION	BY

REGISTERED PROFESSIONAL ENGINEER DUSTIN W. HARRINGTON No. C71517 License Expires 12-31-25 CIVIL STATE OF CALIFORNIA

PREPARED UNDER THE SUPERVISION OF :
REGISTERED CIVIL ENGINEER
1/28/2025
DATE:

DESIGNED:	DRAWN:
DH	AN
CHECKED:	DATE:
JN	1/28/2025
ROAD NUMBER:	

EL DORADO COUNTY CALIFORNIA

COUNTY OF EL DORADO
DEPARTMENT OF TRANSPORTATION

DIAMOND SPRINGS PARKWAY
PHASE 1B
25-0053 E 12 of 45

SHEET G-2
57 OF 136
W.O. No. 72334

DIST	COUNTY	ROUTE	KILOMETER POSTS TOTAL PROJECT	SHEET NO.	TOTAL SHEETS
03	ED	49	11.86/12.4	58	136

The state of California or its officers or agents shall not be responsible for the accuracy or completeness of electronic copies of this plan sheet

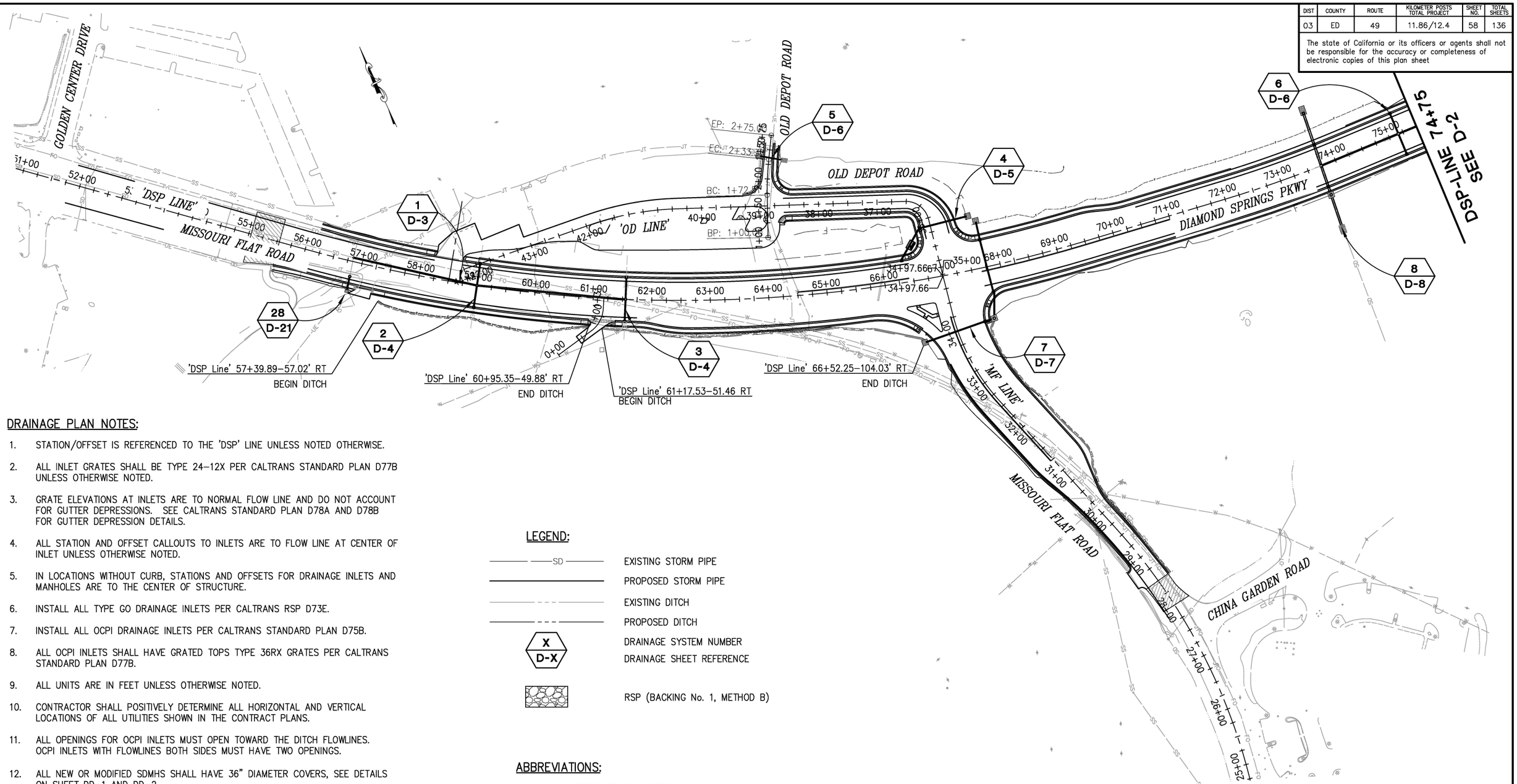

DRAINAGE PLAN NOTES:

1. STATION/OFFSET IS REFERENCED TO THE 'DSP' LINE UNLESS NOTED OTHERWISE.
2. ALL INLET GRATES SHALL BE TYPE 24–12X PER CALTRANS STANDARD PLAN D77B UNLESS OTHERWISE NOTED.
3. GRATE ELEVATIONS AT INLETS ARE TO NORMAL FLOW LINE AND DO NOT ACCOUNT FOR GUTTER DEPRESSIONS. SEE CALTRANS STANDARD PLAN D78A AND D78B FOR GUTTER DEPRESSION DETAILS.
4. ALL STATION AND OFFSET CALLOUTS TO INLETS ARE TO FLOW LINE AT CENTER OF INLET UNLESS OTHERWISE NOTED.
5. IN LOCATIONS WITHOUT CURB, STATIONS AND OFFSETS FOR DRAINAGE INLETS AND MANHOLES ARE TO THE CENTER OF STRUCTURE.
6. INSTALL ALL TYPE GO DRAINAGE INLETS PER CALTRANS RSP D73E.
7. INSTALL ALL OCPI DRAINAGE INLETS PER CALTRANS STANDARD PLAN D75B.
8. ALL OCPI INLETS SHALL HAVE GRATED TOPS TYPE 36RX GRATES PER CALTRANS STANDARD PLAN D77B.
9. ALL UNITS ARE IN FEET UNLESS OTHERWISE NOTED.
10. CONTRACTOR SHALL POSITIVELY DETERMINE ALL HORIZONTAL AND VERTICAL LOCATIONS OF ALL UTILITIES SHOWN IN THE CONTRACT PLANS.
11. ALL OPENINGS FOR OCPI INLETS MUST OPEN TOWARD THE DITCH FLOWLINES. OCPI INLETS WITH FLOWLINES BOTH SIDES MUST HAVE TWO OPENINGS.
12. ALL NEW OR MODIFIED SDMHS SHALL HAVE 36" DIAMETER COVERS, SEE DETAILS ON SHEET DD–1 AND DD–2.
13. SEE SHEET DD–3 FOR ROCK SLOPE PROTECTION FOR DETAILS.

LEGEND:

——SD——	EXISTING STORM PIPE
————	PROPOSED STORM PIPE
- - - -	EXISTING DITCH
- - - -	PROPOSED DITCH
X / D-X	DRAINAGE SYSTEM NUMBER / DRAINAGE SHEET REFERENCE
	RSP (BACKING No. 1, METHOD B)

ABBREVIATIONS:

SDMH — STORM DRAIN MANHOLE

HMAOD — HOT MIXED ASPHALT OVERSIDE DRAIN

THIS SHEET ACCURATE FOR SIGNING AND PAVEMENT DELINEATION WORK ONLY

THIS SHEET ACCURATE FOR DRAINAGE WORK ONLY

DRAINAGE PLAN AND PROFILE
SCALE: 1" = 80'

CU #### | EA 03–0E961

REVISION			
NUMBER	DATE	DESCRIPTION	BY

REGISTERED PROFESSIONAL ENGINEER DUSTIN W. HARRINGTON No. C71517 License Expires 12-31-25 CIVIL STATE OF CALIFORNIA

PREPARED UNDER THE SUPERVISION OF :

REGISTERED CIVIL ENGINEER 1/28/2025 DATE:

DESIGNED: DH	DRAWN: AN
CHECKED: JN	DATE: 1/28/2025
ROAD NUMBER:	

EL DORADO COUNTY CALIFORNIA

COUNTY OF EL DORADO
DEPARTMENT OF TRANSPORTATION

DIAMOND SPRINGS PARKWAY
PHASE 1B

25-0053 E 13 of 45

SHEET **D-1**
58 OF 136
W.O. No. **72334**

FOR REDUCED PLANS 0 1 2

ORIGINAL SCALE IS IN INCHES
Drawing name: Z:\Civil 3D Projects\72334 Diamond Springs Pkwy\CADD Files\Sheets\Ultimate\D Sheets.dwg Layout Tab: D-1 Jan 16,2025 – 11:57pm DHarrington

DIST	COUNTY	ROUTE	KILOMETER POSTS TOTAL PROJECT	SHEET NO.	TOTAL SHEETS
03	ED	49	11.86/12.4	59	136

The state of California or its officers or agents shall not be responsible for the accuracy or completeness of electronic copies of this plan sheet

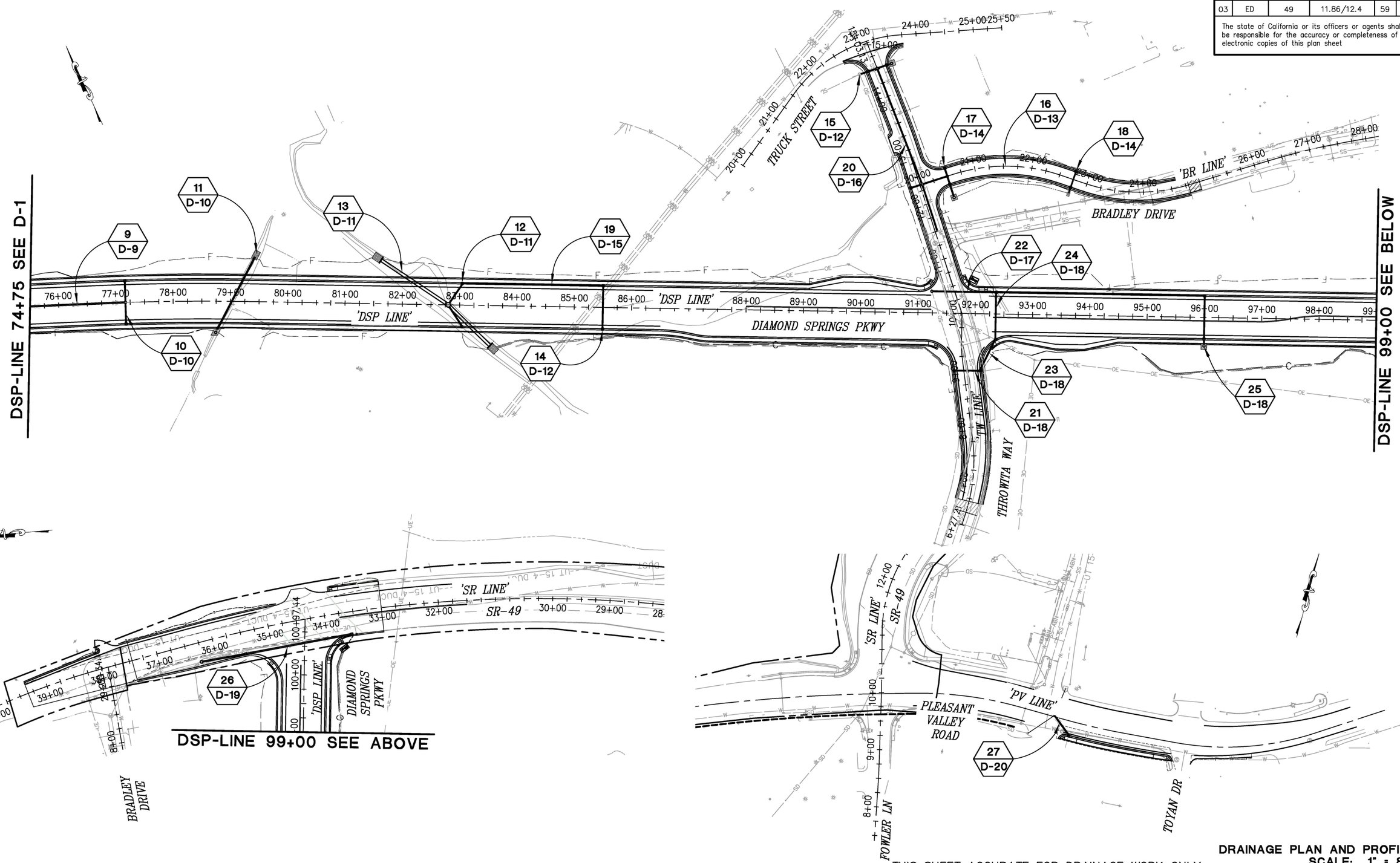

THIS SHEET ACCURATE FOR DRAINAGE WORK ONLY

DRAINAGE PLAN AND PROFILE
SCALE: 1" = 80'

CU #### | EA 03-0E961

ORIGINAL SCALE IS IN INCHES
Drawing name: Z:\Civil 3D Projects\72334 Diamond Springs Pkwy\CADD Files\Sheets\Ultimate\D Sheets.dwg Layout Tab: D-2 Jan 16,2025 – 11:59pm DHarrington

FOR REDUCED PLANS 0 1 2

REVISION			
NUMBER	DATE	DESCRIPTION	BY

REGISTERED PROFESSIONAL ENGINEER DUSTIN W. HARRINGTON No. C71517 License Expires 12-31-25 CIVIL STATE OF CALIFORNIA

PREPARED UNDER THE SUPERVISION OF :
REGISTERED CIVIL ENGINEER
DATE: 1/28/2025

DESIGNED: DH	DRAWN: AN
CHECKED: JN	DATE: 1/28/2025
ROAD NUMBER:	

EL DORADO COUNTY CALIFORNIA

COUNTY OF EL DORADO
DEPARTMENT OF TRANSPORTATION

DIAMOND SPRINGS PARKWAY
PHASE 1B
25-0053 E 14 of 45

SHEET **D-2**
59 OF 136
W.O. No. **72334**

DIST	COUNTY	ROUTE	KILOMETER POSTS TOTAL PROJECT	SHEET NO.	TOTAL SHEETS
03	ED	49	11.86/12.4	60	136

The state of California or its officers or agents shall not be responsible for the accuracy or completeness of electronic copies of this plan sheet

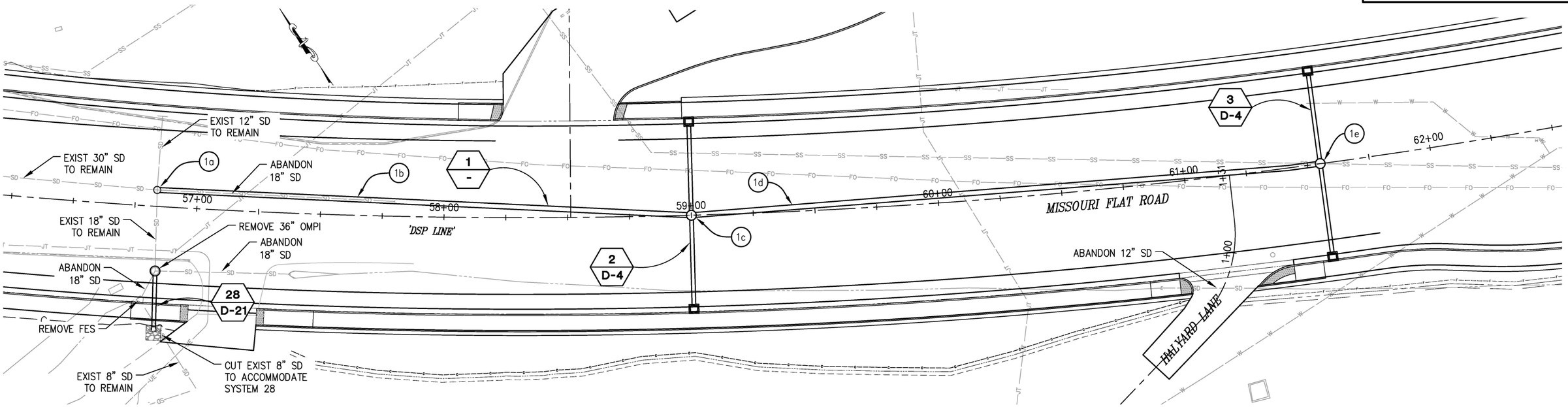

1 PLAN-SD SYSTEM 1

SCALE: 1" = 20'

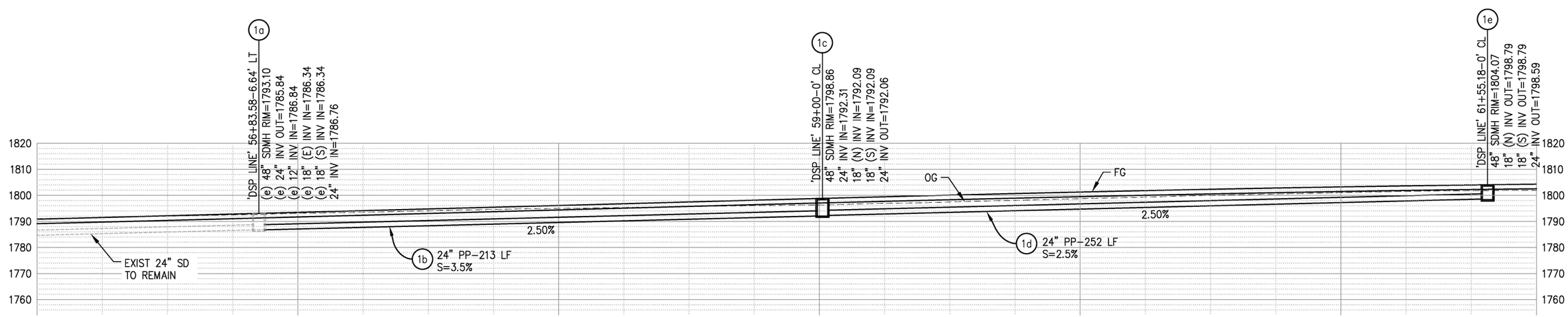

1 PROFILE-SD SYSTEM 1

SCALE: 1" = 20'

THIS SHEET ACCURATE FOR DRAINAGE WORK ONLY

DRAINAGE SYSTEM 1
SCALE: AS SHOWN

CU ####
EA 03-0E961

REVISION			
NUMBER	DATE	DESCRIPTION	BY

REGISTERED PROFESSIONAL ENGINEER DUSTIN W. HARRINGTON No. C71517 License Expires 12-31-25 CIVIL STATE OF CALIFORNIA

PREPARED UNDER THE SUPERVISION OF :

REGISTERED CIVIL ENGINEER 1/28/2025
DATE:

DESIGNED: DH	DRAWN: AN
CHECKED: JN	DATE: 1/28/2025
ROAD NUMBER:	

EL DORADO COUNTY CALIFORNIA

COUNTY OF EL DORADO
DEPARTMENT OF TRANSPORTATION

DIAMOND SPRINGS PARKWAY
PHASE 1B

25-0053 E 15 of 45

SHEET D-3
60 OF 136
W.O. No. 72334

ORIGINAL SCALE IS IN INCHES
FOR REDUCED PLANS 0 1 2

Drawing name: Z:\Civil 3D Projects\72334 Diamond Springs Pkwy\CADD Files\Sheets\Ultimate\D Sheets.dwg Layout Tab: D-3 Jan 17,2025 - 12:02am DHarrington

DIST	COUNTY	ROUTE	KILOMETER POSTS TOTAL PROJECT	SHEET NO.	TOTAL SHEETS
03	ED	49	11.86/12.4	61	136

The state of California or its officers or agents shall not be responsible for the accuracy or completeness of electronic copies of this plan sheet

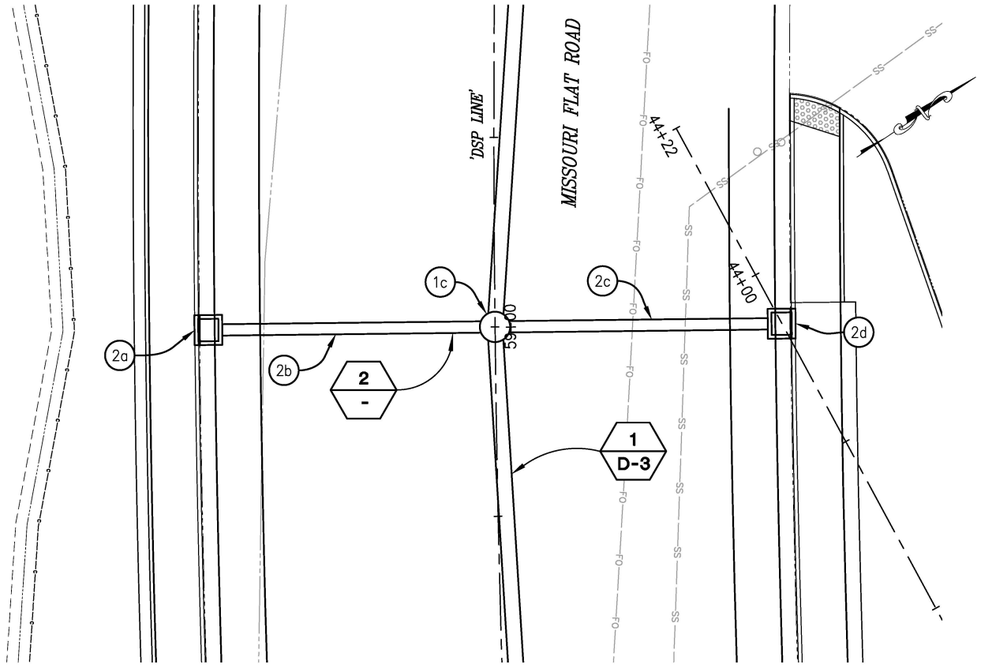

2 PLAN-SD SYSTEM 2

SCALE: 1" = 10'

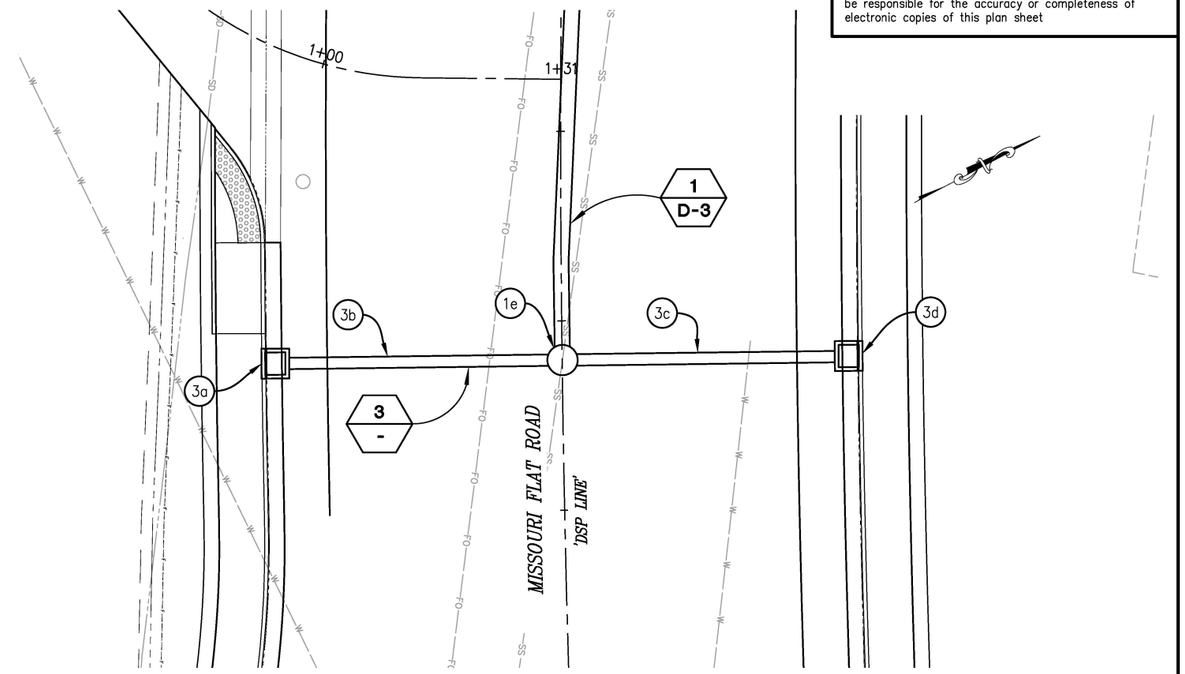

3 PLAN-SD SYSTEM 3

SCALE: 1" = 10'

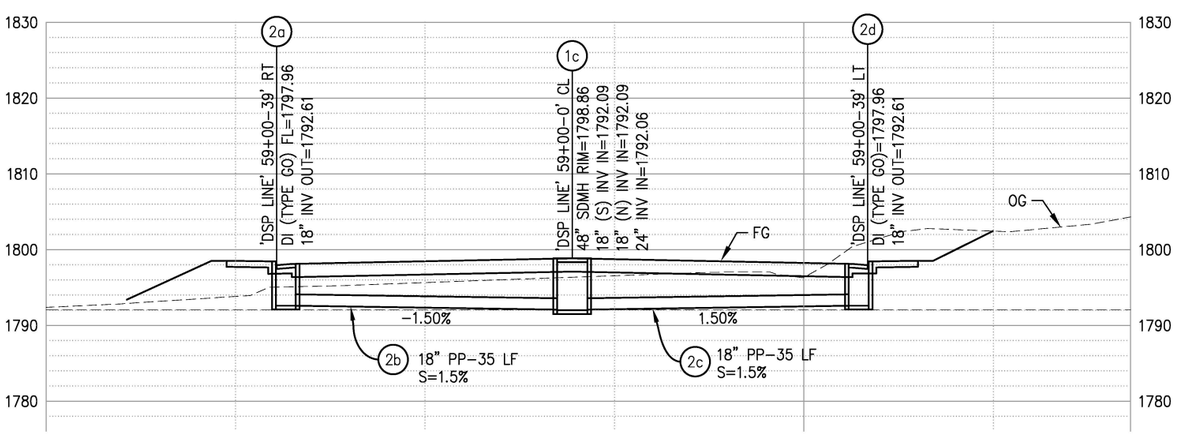

2 PROFILE-SD SYSTEM 2

SCALE: 1" = 10'

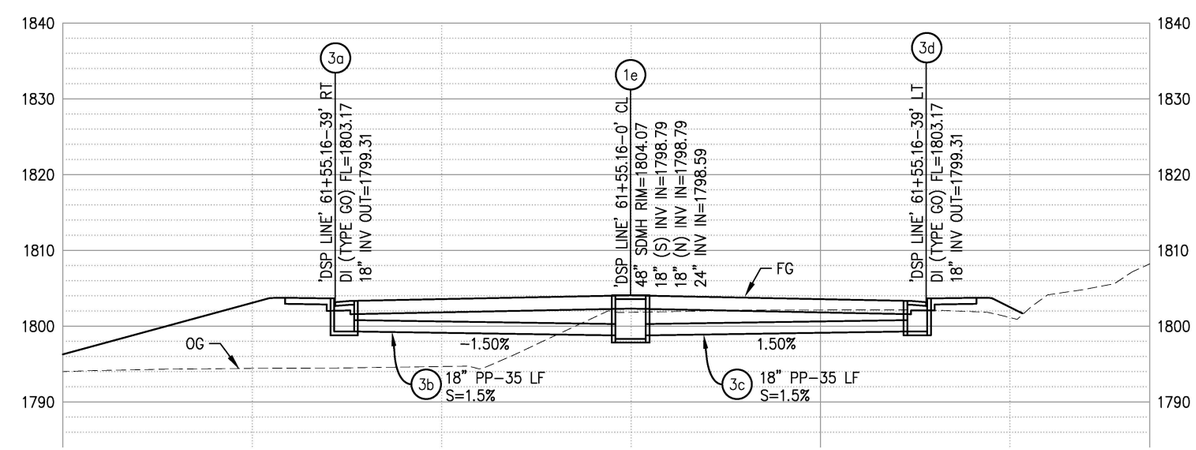

3 PROFILE-SD SYSTEM 3

SCALE: 1" = 10'

THIS SHEET ACCURATE FOR DRAINAGE WORK ONLY

DRAINAGE SYSTEM 2 & 3
SCALE: AS SHOWN

CU ####	EA 03-0E961

ORIGINAL SCALE IS IN INCHES
FOR REDUCED PLANS 0 1 2

Drawing name: Z:\Civil 3D Projects\72334 Diamond Springs Pkwy\CADD Files\Sheets\Ultimate\D Sheets.dwg Layout Tab: D-4 Jan 17,2025 - 12:03am DHarrington

REVISION			
NUMBER	DATE	DESCRIPTION	BY

REGISTERED PROFESSIONAL ENGINEER DUSTIN N. HARRINGTON No. C71517 License Expires 12-31-25 CIVIL STATE OF CALIFORNIA

PREPARED UNDER THE SUPERVISION OF :

REGISTERED CIVIL ENGINEER

DATE: 1/28/2025

DESIGNED: DH	DRAWN: AN
CHECKED: JN	DATE: 1/28/2025
ROAD NUMBER:	

EL DORADO COUNTY CALIFORNIA

COUNTY OF EL DORADO
DEPARTMENT OF TRANSPORTATION

DIAMOND SPRINGS PARKWAY
PHASE 1B

25-0053 E 16 of 45

SHEET **D-4**
61 OF 136
W.O. No. **72334**

DIST	COUNTY	ROUTE	KILOMETER POSTS TOTAL PROJECT	SHEET NO.	TOTAL SHEETS
03	ED	49	11.86/12.4	62	136

The state of California or its officers or agents shall not be responsible for the accuracy or completeness of electronic copies of this plan sheet

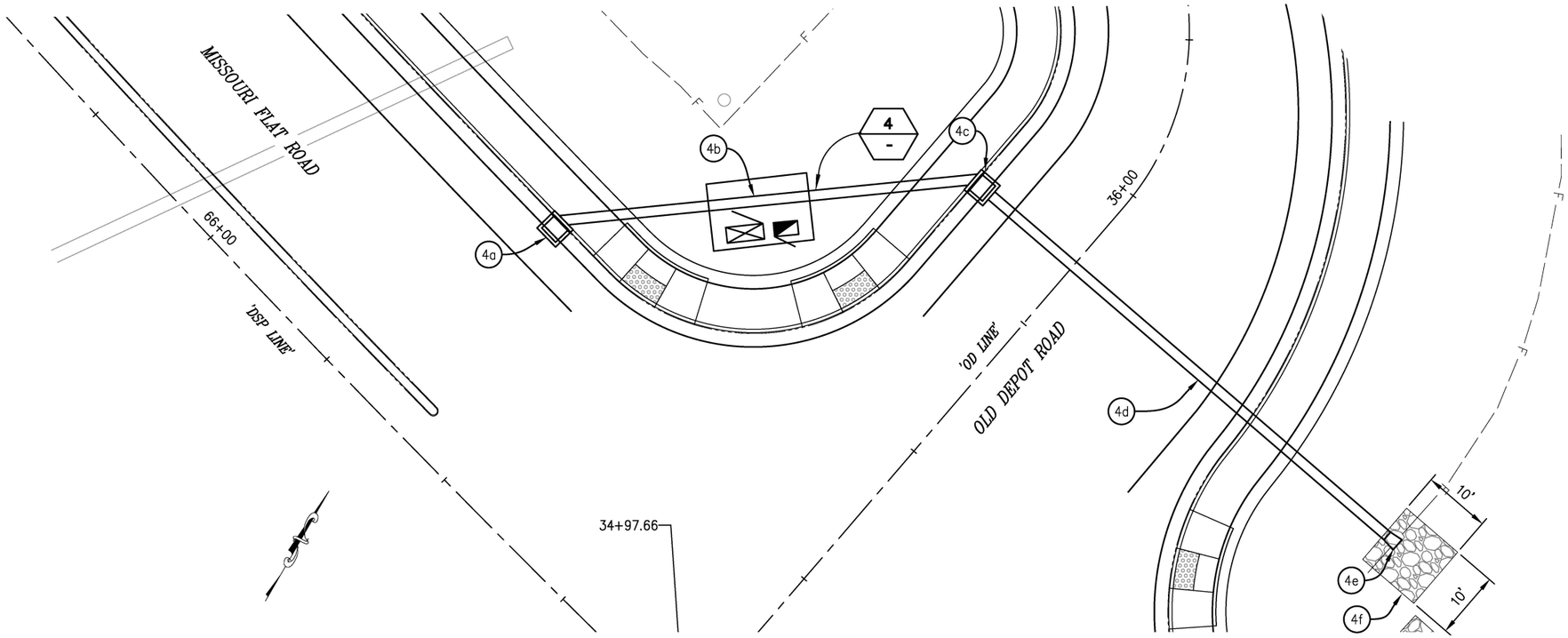

4 PLAN-SD SYSTEM 4

SCALE: 1" = 10'

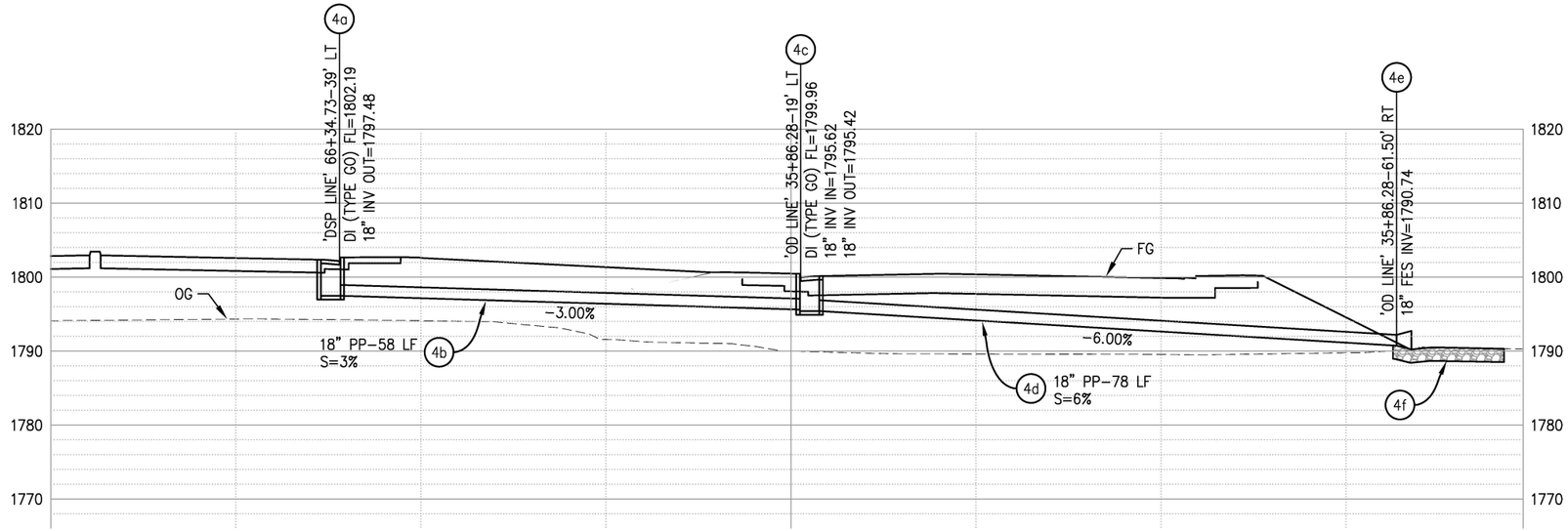

4 PROFILE-SD SYSTEM 4

SCALE: 1" = 10'

THIS SHEET ACCURATE FOR DRAINAGE WORK ONLY

DRAINAGE SYSTEM 4
SCALE: AS SHOWN

CU ### | EA 03-0E961

REVISION			
NUMBER	DATE	DESCRIPTION	BY

REGISTERED PROFESSIONAL ENGINEER DUSTIN W. HARRINGTON No. C71517 License Expires 12-31-25 CIVIL STATE OF CALIFORNIA

PREPARED UNDER THE SUPERVISION OF :

REGISTERED CIVIL ENGINEER 1/28/2025 DATE:

DESIGNED: DH	DRAWN: AN
CHECKED: JN	DATE: 1/28/2025
ROAD NUMBER:	

EL DORADO COUNTY CALIFORNIA

COUNTY OF EL DORADO
DEPARTMENT OF TRANSPORTATION

DIAMOND SPRINGS PARKWAY
PHASE 1B

25-0053 E 17 of 45

SHEET D-5
62 OF 136
W.O. No. 72334

ORIGINAL SCALE IS IN INCHES
Drawing name: Z:\Civil 3D Projects\72334 Diamond Springs Pkwy\CADD Files\Sheets\Ultimate\D Sheets.dwg Layout Tab: D-5 Jan 17,2025 - 12:03am DHarrington

FOR REDUCED PLANS 0 1 2

DIST	COUNTY	ROUTE	KILOMETER POSTS TOTAL PROJECT	SHEET NO.	TOTAL SHEETS
03	ED	49	11.86/12.4	63	136

The state of California or its officers or agents shall not be responsible for the accuracy or completeness of electronic copies of this plan sheet

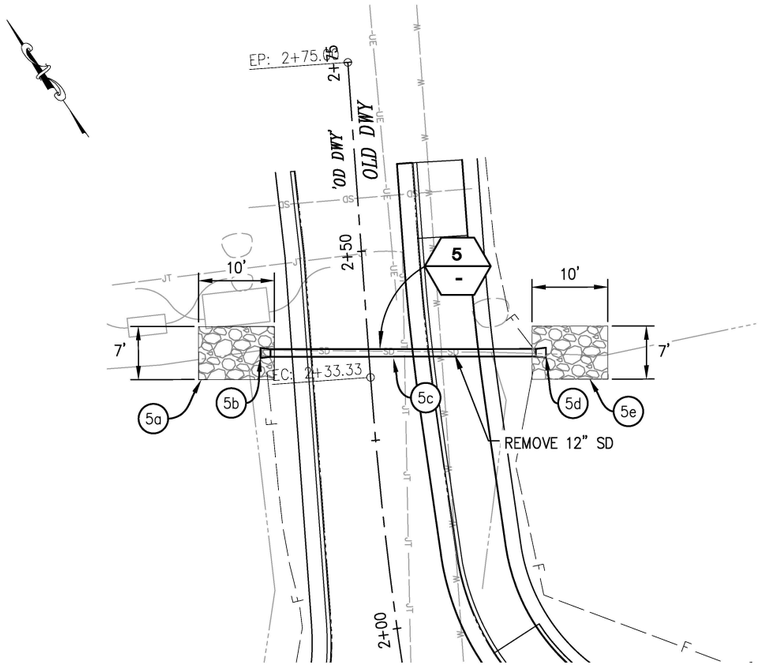

5 PLAN-SD SYSTEM 5

SCALE: 1" = 10'

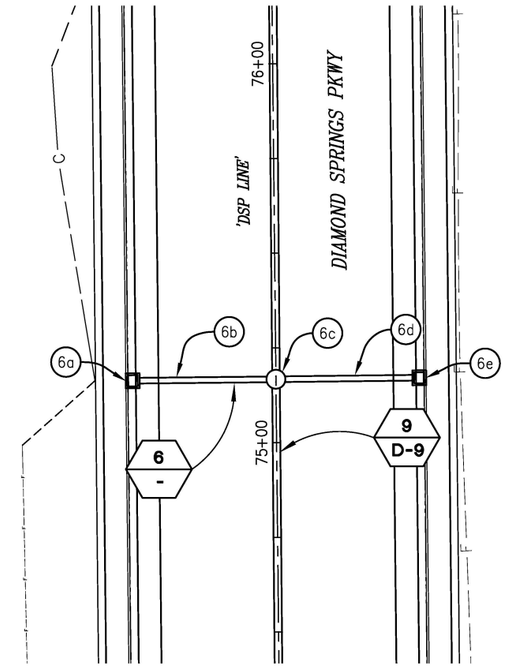

6 PLAN-SD SYSTEM 6

SCALE: 1" = 20'

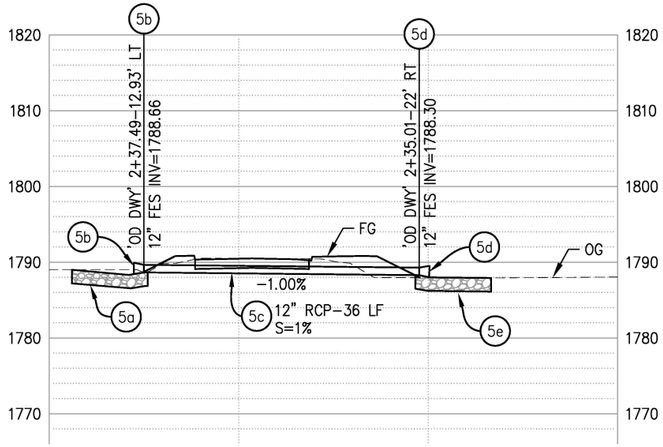

5 PROFILE-SD SYSTEM 5

SCALE: 1" = 10'

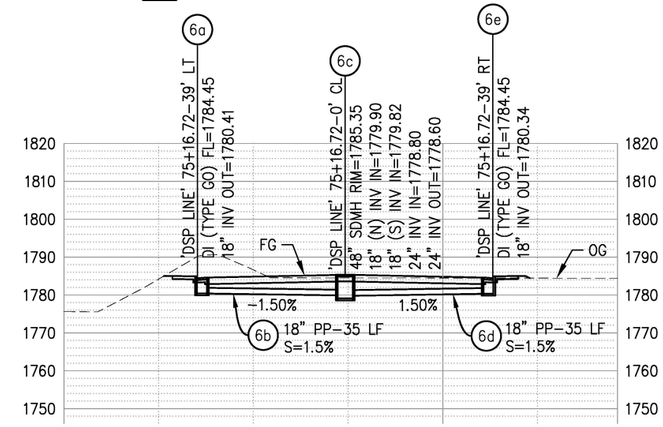

6 PROFILE-SD SYSTEM 6

SCALE: 1" = 20'

THIS SHEET ACCURATE FOR DRAINAGE WORK ONLY

DRAINAGE SYSTEM 5 & 6
SCALE: AS SHOWN

CU ####	EA 03-0E961

ORIGINAL SCALE IS IN INCHES
Drawing name: Z:\Civil 3D Projects\72334 Diamond Springs Pkwy\CADD Files\Sheets\Ultimate\D Sheets.dwg Layout Tab: D-6 Jan 17,2025 - 12:04am DHarrington

FOR REDUCED PLANS 0 1 2

REVISION			
NUMBER	DATE	DESCRIPTION	BY

REGISTERED PROFESSIONAL ENGINEER DUSTIN W. HARRINGTON No. C71517 License Expires 12-31-25 CIVIL STATE OF CALIFORNIA

PREPARED UNDER THE SUPERVISION OF :

REGISTERED CIVIL ENGINEER 1/28/2025 DATE:

DESIGNED: DH	DRAWN: AN
CHECKED: JN	DATE: 1/28/2025
ROAD NUMBER:	

EL DORADO COUNTY CALIFORNIA

COUNTY OF EL DORADO
DEPARTMENT OF TRANSPORTATION

DIAMOND SPRINGS PARKWAY
PHASE 1B

25-0053 E 18 of 45

SHEET **D-6**
63 OF 136
W.O. No. **72334**

DIST	COUNTY	ROUTE	KILOMETER POSTS TOTAL PROJECT	SHEET NO.	TOTAL SHEETS
03	ED	49	11.86/12.4	64	136

The state of California or its officers or agents shall not be responsible for the accuracy or completeness of electronic copies of this plan sheet

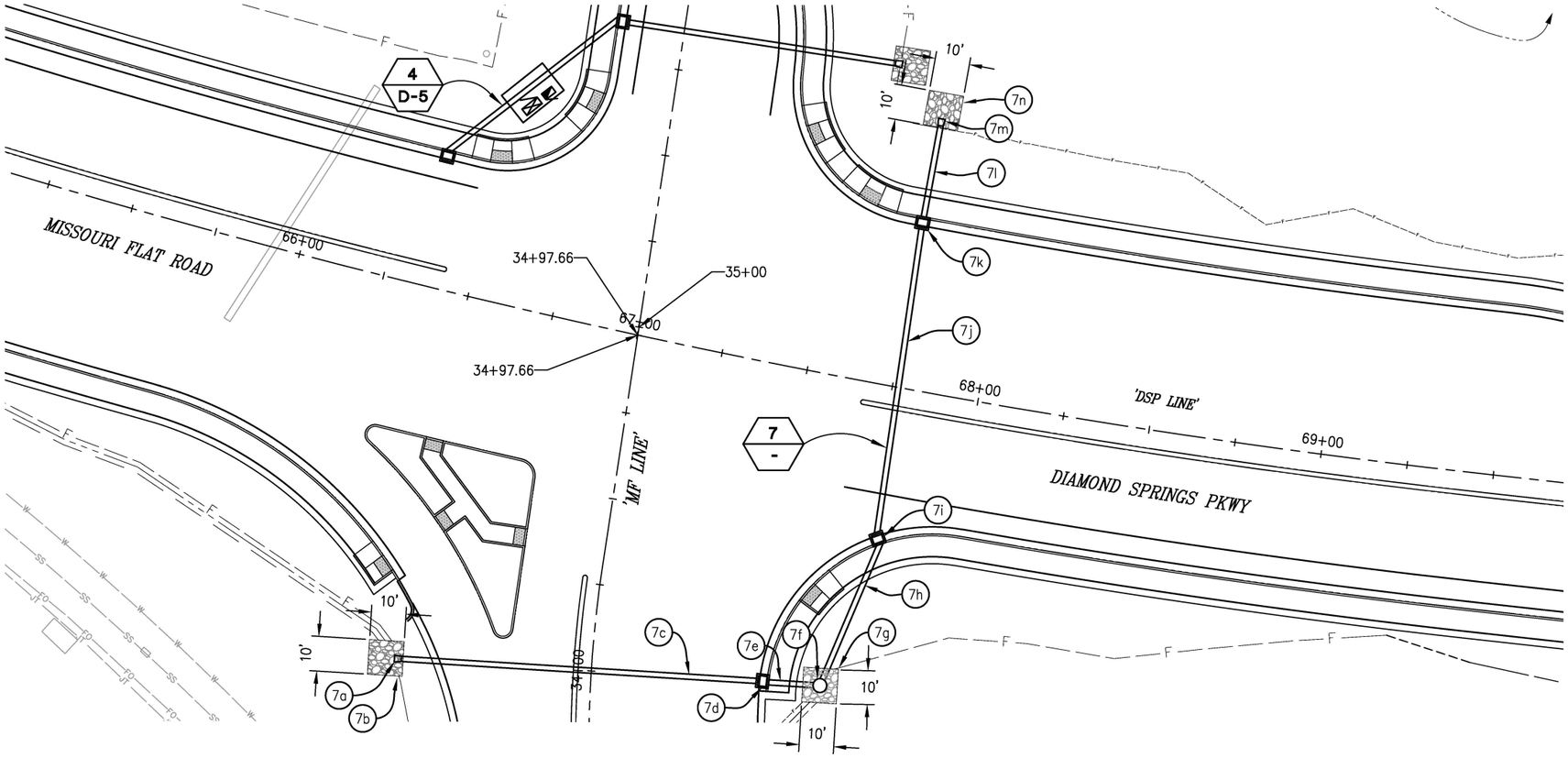

7 PLAN-SD SYSTEM 7

SCALE: 1" = 20'

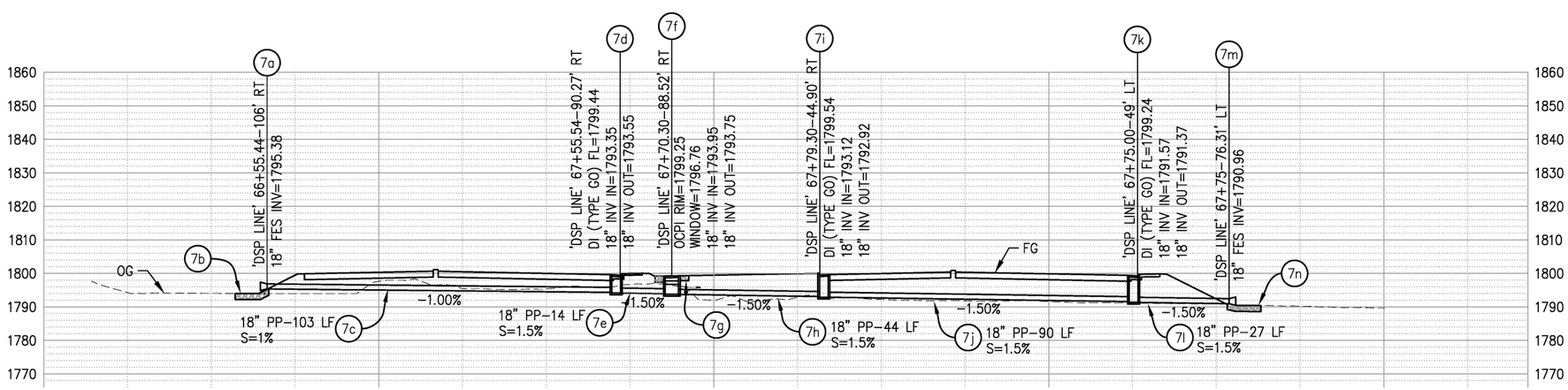

7 PROFILE-SD SYSTEM 7

SCALE: 1" = 20'

THIS SHEET ACCURATE FOR DRAINAGE WORK ONLY

DRAINAGE SYSTEM 7
SCALE: AS SHOWN

CU ### | EA 03-0E961

ORIGINAL SCALE IS IN INCHES
Drawing name: Z:\Civil 3D Projects\72334 Diamond Springs Pkwy\CADD Files\Sheets\Ultimate\D Sheets.dwg Layout Tab: D-7 Jan 17,2025 - 12:05am DHarrington

FOR REDUCED PLANS 0 1 2

REVISION			
NUMBER	DATE	DESCRIPTION	BY

REGISTERED PROFESSIONAL ENGINEER DUSTIN W. HARRINGTON No. C71517 License Expires 12-31-25 CIVIL STATE OF CALIFORNIA

PREPARED UNDER THE SUPERVISION OF :

REGISTERED CIVIL ENGINEER 1/28/2025 DATE:

DESIGNED: DH	DRAWN: AN
CHECKED: JN	DATE: 1/28/2025
ROAD NUMBER:	

EL DORADO COUNTY CALIFORNIA

COUNTY OF EL DORADO
DEPARTMENT OF TRANSPORTATION

DIAMOND SPRINGS PARKWAY
PHASE 1B

25-0053 E 19 of 45

SHEET D-7
64 OF 136
W.O. No. 72334

DIST	COUNTY	ROUTE	KILOMETER POSTS TOTAL PROJECT	SHEET NO.	TOTAL SHEETS
03	ED	49	11.86/12.4	65	136

The state of California or its officers or agents shall not be responsible for the accuracy or completeness of electronic copies of this plan sheet

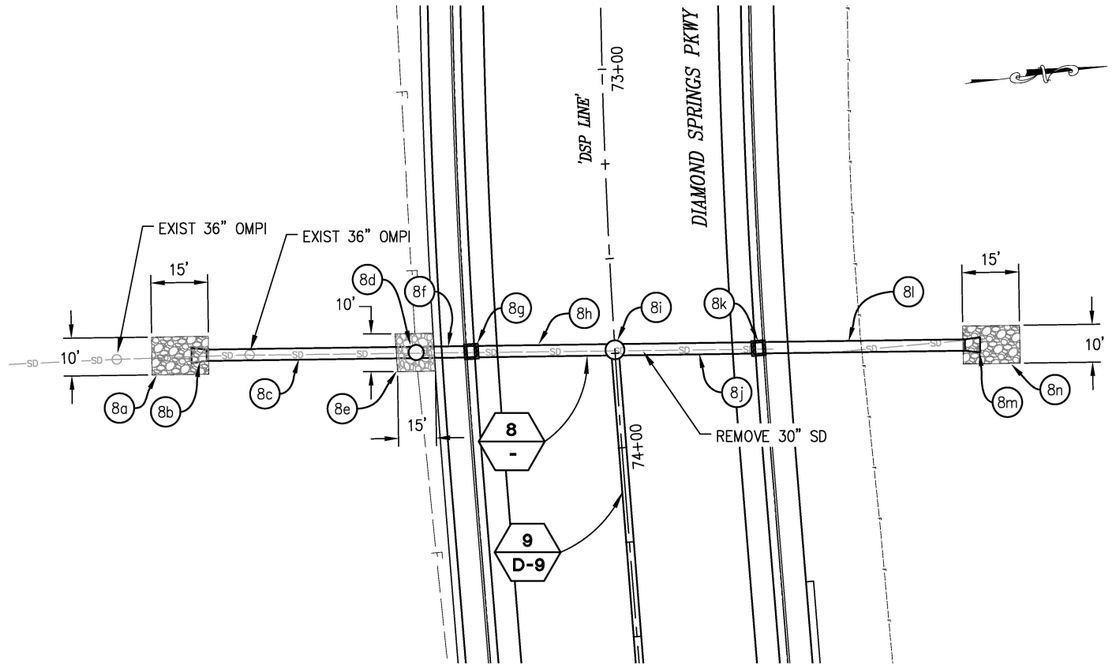

8 PLAN-SD SYSTEM 8

SCALE: 1" = 20'

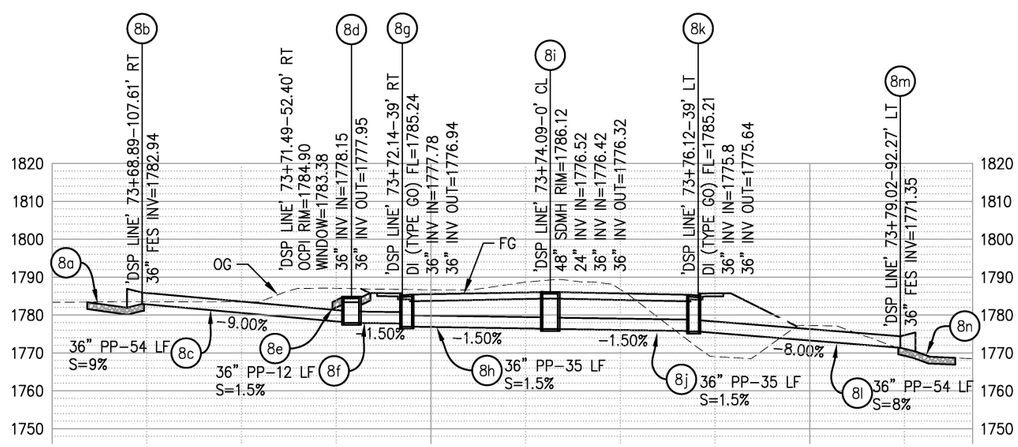

8 PROFILE-SD SYSTEM 8

SCALE: 1" = 20'

THIS SHEET ACCURATE FOR DRAINAGE WORK ONLY

DRAINAGE SYSTEM 8
SCALE: AS SHOWN

CU ####
EA 03-0E961

ORIGINAL SCALE IS IN INCHES
Drawing name: Z:\Civil 3D Projects\72334 Diamond Springs Pkwy\CADD Files\Sheets\Ultimate\D Sheets.dwg Layout Tab: D-8 Jan 17,2025 - 12:06am DHarrington

FOR REDUCED PLANS 0 1 2

REVISION			
NUMBER	DATE	DESCRIPTION	BY

REGISTERED PROFESSIONAL ENGINEER
DUSTIN W. HARRINGTON
No. C71517
License Expires 12-31-25
CIVIL
STATE OF CALIFORNIA

PREPARED UNDER THE SUPERVISION OF :
REGISTERED CIVIL ENGINEER
1/28/2025
DATE:

DESIGNED: DH	DRAWN: AN
CHECKED: JN	DATE: 1/28/2025
ROAD NUMBER:	

EL DORADO COUNTY CALIFORNIA

COUNTY OF EL DORADO
DEPARTMENT OF TRANSPORTATION

DIAMOND SPRINGS PARKWAY
PHASE 1B

25-0053 E 20 of 45

SHEET D-8
65 OF 136
W.O. No. 72334

DIST	COUNTY	ROUTE	KILOMETER POSTS TOTAL PROJECT	SHEET NO.	TOTAL SHEETS
03	ED	49	11.86/12.4	66	136

The state of California or its officers or agents shall not be responsible for the accuracy or completeness of electronic copies of this plan sheet

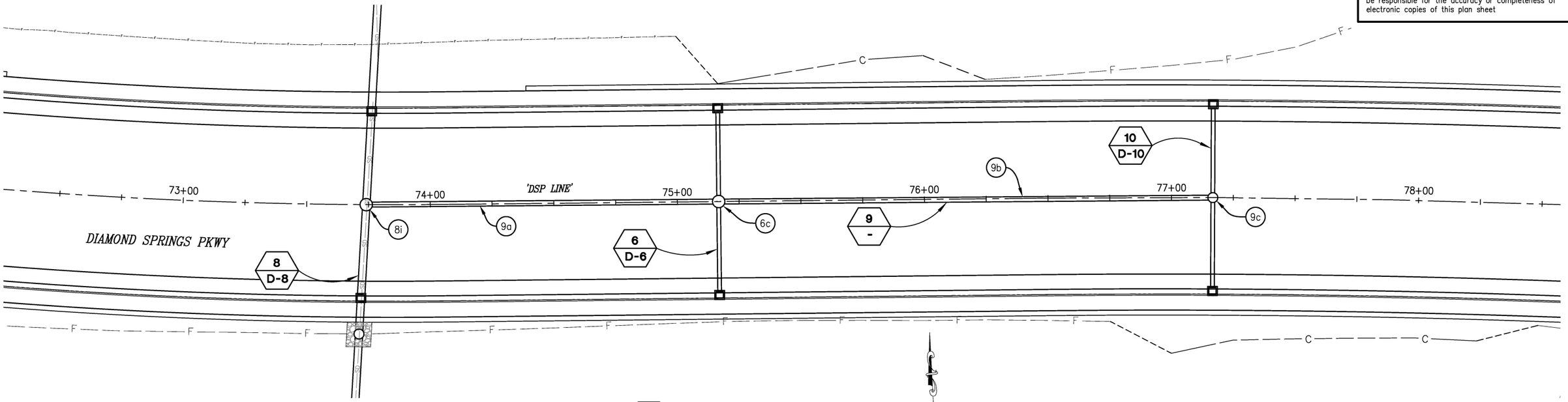

9 PLAN-SD SYSTEM 9

SCALE: 1" = 20'

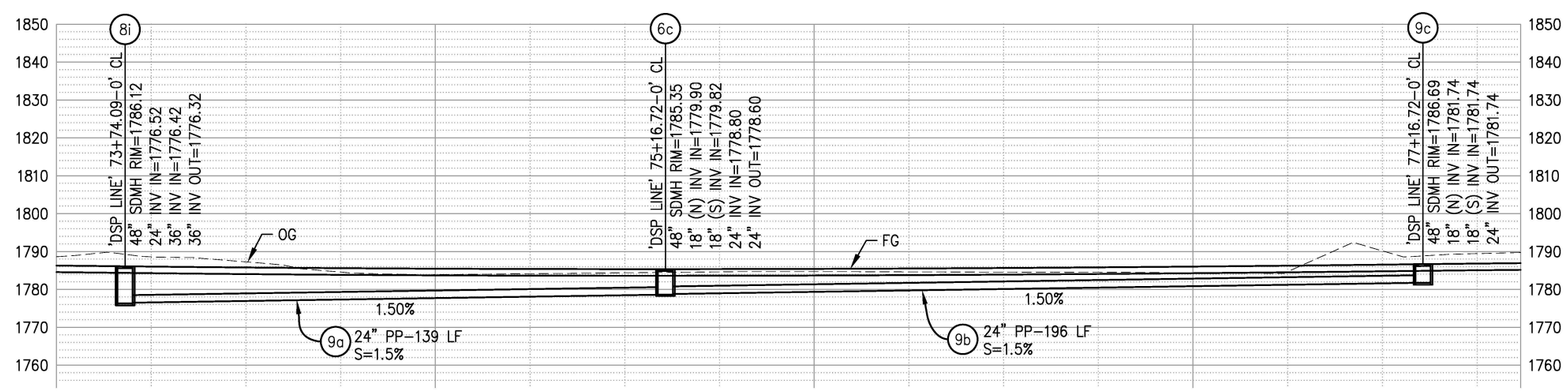

9 PROFILE-SD SYSTEM 9

SCALE: 1" = 20'

CONSTRUCTION NOTES:

(1) — EXISTING STORM DRAIN TO BE REMOVED

THIS SHEET ACCURATE FOR DRAINAGE WORK ONLY

DRAINAGE SYSTEM 9
SCALE: AS SHOWN

CU #### | EA 03–0E961

REVISION			
NUMBER	DATE	DESCRIPTION	BY

REGISTERED PROFESSIONAL ENGINEER DUSTIN W. HARRINGTON No. C71517 License Expires 12–31–25 CIVIL STATE OF CALIFORNIA

PREPARED UNDER THE SUPERVISION OF :

REGISTERED CIVIL ENGINEER 1/28/2025 DATE:

DESIGNED: DH	DRAWN: AN
CHECKED: JN	DATE: 1/28/2025
ROAD NUMBER:	

EL DORADO COUNTY CALIFORNIA

COUNTY OF EL DORADO
DEPARTMENT OF TRANSPORTATION

DIAMOND SPRINGS PARKWAY
PHASE 1B

25-0053 E 21 of 45

SHEET D-9
66 OF 136
W.O. No. 72334

FOR REDUCED PLANS 0 1 2
ORIGINAL SCALE IS IN INCHES
Drawing name: Z:\Civil 3D Projects\72334 Diamond Springs Pkwy\CADD Files\Sheets\Ultimate\D Sheets.dwg Layout Tab: D-9 Jan 17,2025 – 12:06am DHarrington

DIST	COUNTY	ROUTE	KILOMETER POSTS TOTAL PROJECT	SHEET NO.	TOTAL SHEETS
03	ED	49	11.86/12.4	67	136

The state of California or its officers or agents shall not be responsible for the accuracy or completeness of electronic copies of this plan sheet

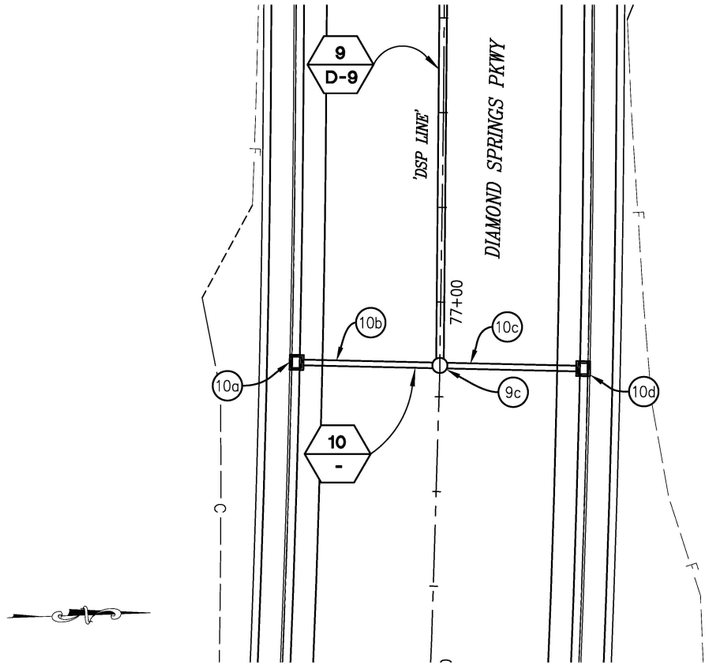

10 PLAN-SD SYSTEM 10

SCALE: 1" = 20'

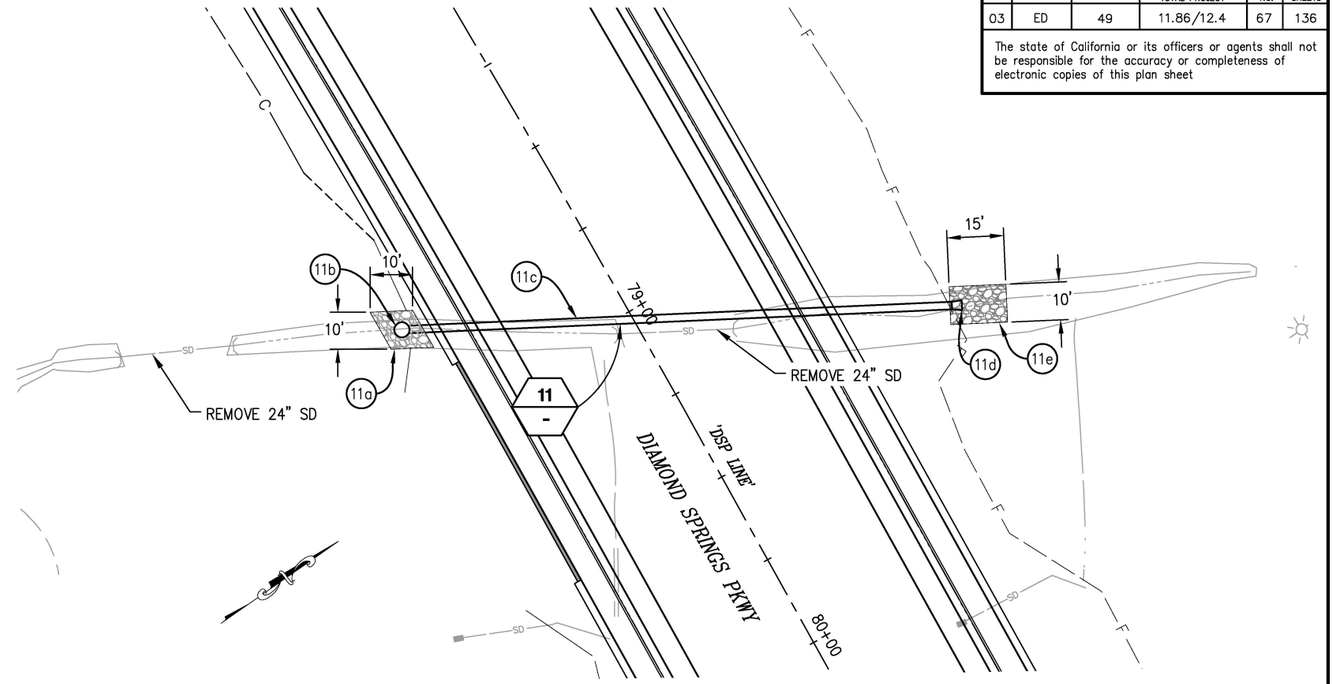

11 PLAN-SD SYSTEM 11

SCALE: 1" = 20'

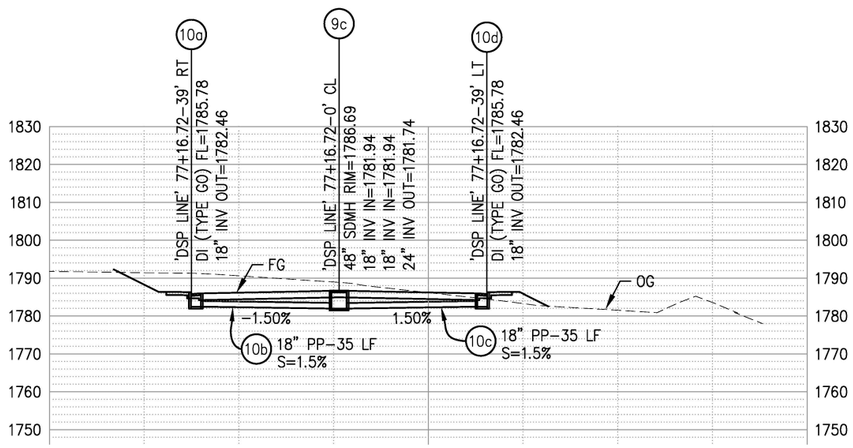

10 PROFILE-SD SYSTEM 10

SCALE: 1" = 20'

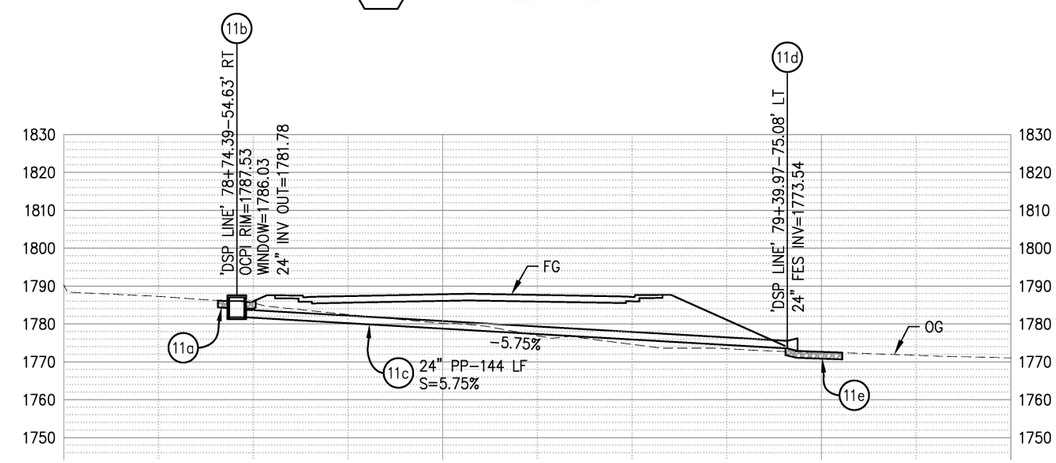

11 PROFILE-SD SYSTEM 11

SCALE: 1" = 20'

THIS SHEET ACCURATE FOR DRAINAGE WORK ONLY

DRAINAGE SYSTEM 10 & 11
SCALE: AS SHOWN

CU ####	EA 03-0E961

REVISION			
NUMBER	DATE	DESCRIPTION	BY

REGISTERED PROFESSIONAL ENGINEER DUSTIN W. HARRINGTON No. C71517 License Expires 12-31-25 CIVIL STATE OF CALIFORNIA

PREPARED UNDER THE SUPERVISION OF :

REGISTERED CIVIL ENGINEER 1/28/2025 DATE:

DESIGNED: DH	DRAWN: AN
CHECKED: JN	DATE: 1/28/2025
ROAD NUMBER:	

EL DORADO COUNTY CALIFORNIA

COUNTY OF EL DORADO
DEPARTMENT OF TRANSPORTATION

DIAMOND SPRINGS PARKWAY
PHASE 1B

25-0053 E 22 of 45

SHEET **D-10**
67 OF 136
W.O. No. **72334**

ORIGINAL SCALE IS IN INCHES
Drawing name: Z:\Civil 3D Projects\72334 Diamond Springs Pkwy\CADD Files\Sheets\Ultimate\D Sheets.dwg Layout Tab: D-10 Jan 17,2025 - 12:07am DHarrington

FOR REDUCED PLANS 0 1 2

DIST	COUNTY	ROUTE	KILOMETER POSTS TOTAL PROJECT	SHEET NO.	TOTAL SHEETS
03	ED	49	11.86/12.4	68	136

The state of California or its officers or agents shall not be responsible for the accuracy or completeness of electronic copies of this plan sheet

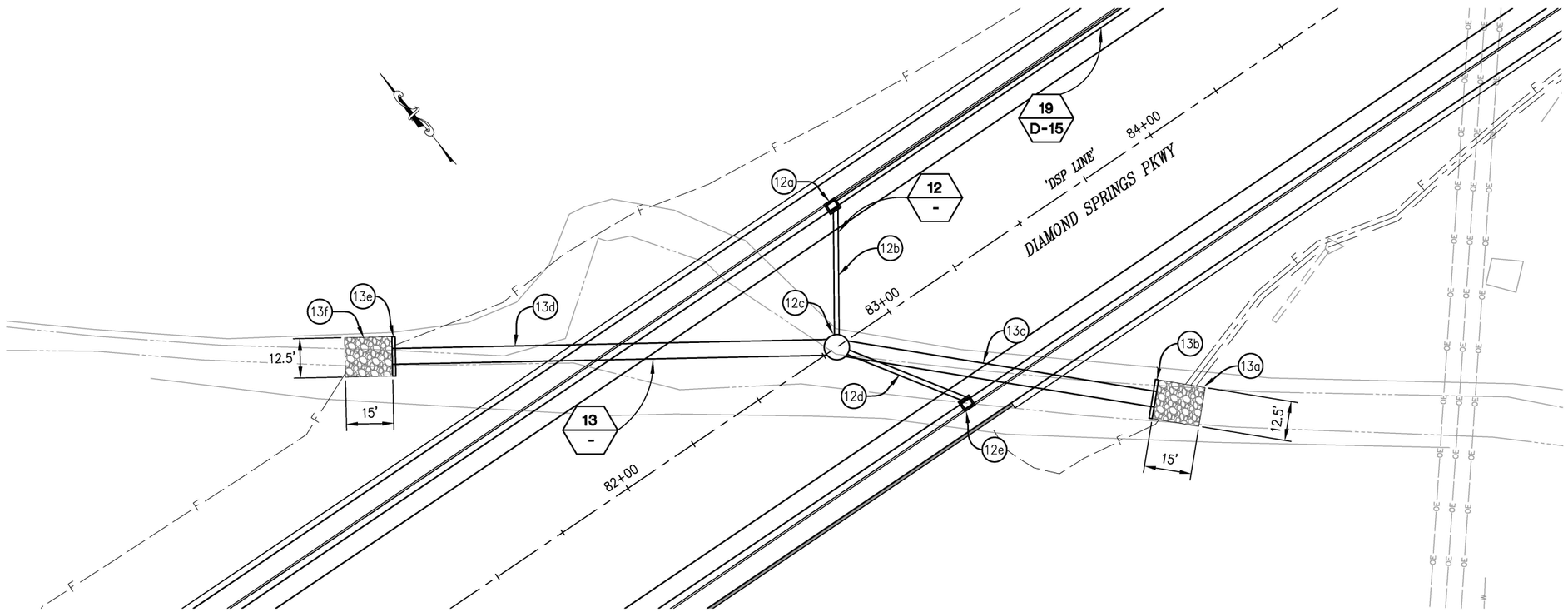

12 13 PLAN-SD SYSTEM 12 & 13

SCALE: 1" = 20'

CONSTRUCTION NOTES:

(13b)(13e) — PIPE CULVERT HEADWALL, TYPE C PER D90
DESIGN "H" = 4' PER B3-1B
CASE 2 BACKFILL LOADING

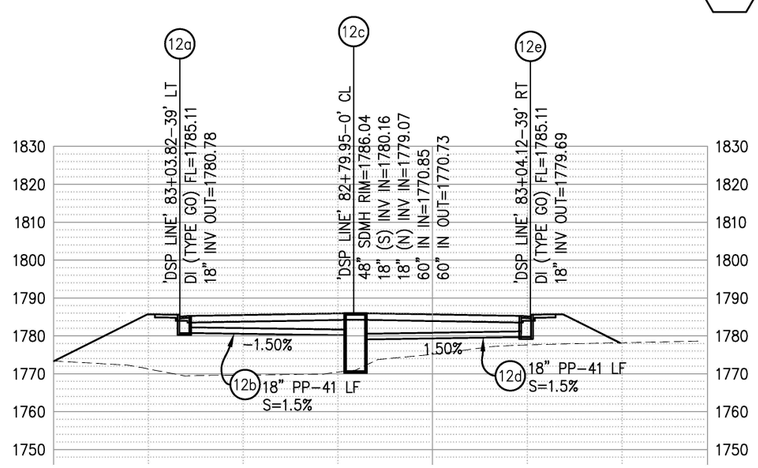

12 PROFILE-SD SYSTEM 12

SCALE: 1" = 20'

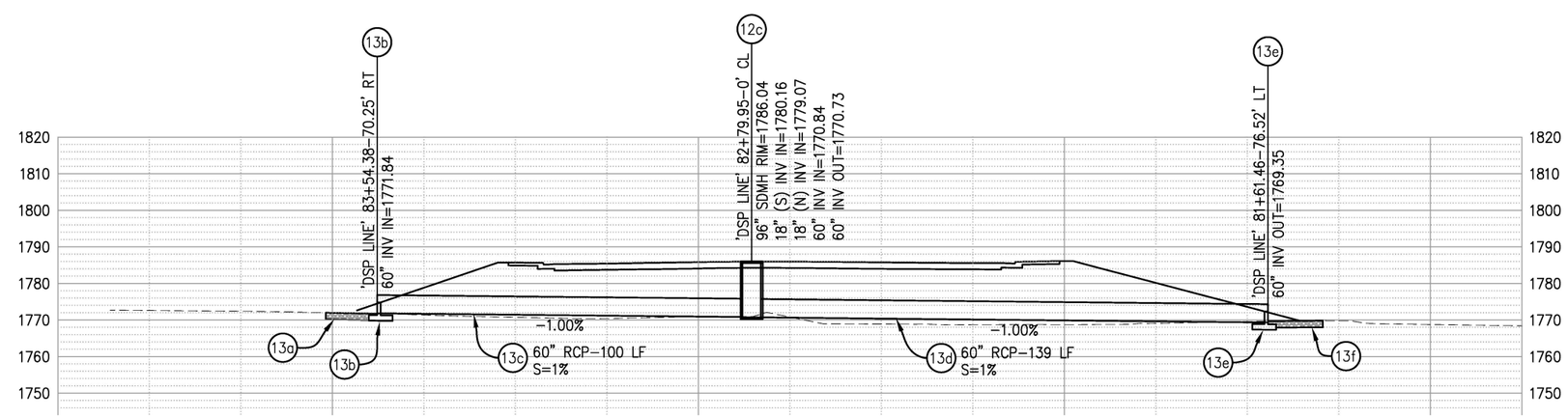

13 PROFILE-SD SYSTEM 13

SCALE: 1" = 20'

THIS SHEET ACCURATE FOR DRAINAGE WORK ONLY

DRAINAGE SYSTEM 12 & 13
SCALE: AS SHOWN

CU #### | EA 03-0E961

REVISION			
NUMBER	DATE	DESCRIPTION	BY

REGISTERED PROFESSIONAL ENGINEER DUSTIN W. HARRINGTON No. C71517 License Expires 12-31-25 CIVIL STATE OF CALIFORNIA

PREPARED UNDER THE SUPERVISION OF :

REGISTERED CIVIL ENGINEER

DATE: 1/28/2025

DESIGNED: DH	DRAWN: AN
CHECKED: JN	DATE: 1/28/2025
ROAD NUMBER:	

EL DORADO COUNTY CALIFORNIA

COUNTY OF EL DORADO
DEPARTMENT OF TRANSPORTATION

DIAMOND SPRINGS PARKWAY
PHASE 1B

25-0053 E 23 of 45

SHEET D-11
68 OF 136
W.O. No. 72334

ORIGINAL SCALE IS IN INCHES
FOR REDUCED PLANS 0 1 2

Drawing name: Z:\Civil 3D Projects\72334 Diamond Springs Pkwy\CADD Files\Sheets\Ultimate\D Sheets.dwg Layout Tab: D-11 Jan 17,2025 – 12:08am DHarrington

DIST	COUNTY	ROUTE	KILOMETER POSTS TOTAL PROJECT	SHEET NO.	TOTAL SHEETS
03	ED	49	11.86/12.4	69	136

The state of California or its officers or agents shall not be responsible for the accuracy or completeness of electronic copies of this plan sheet

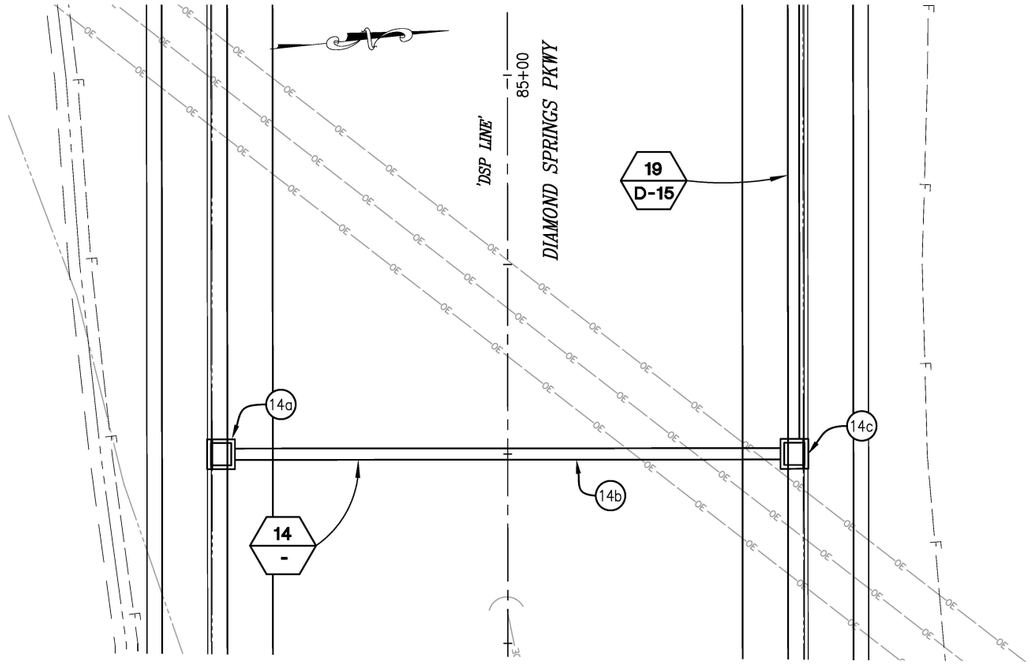

14 PLAN-SD SYSTEM 14

SCALE: 1" = 10'

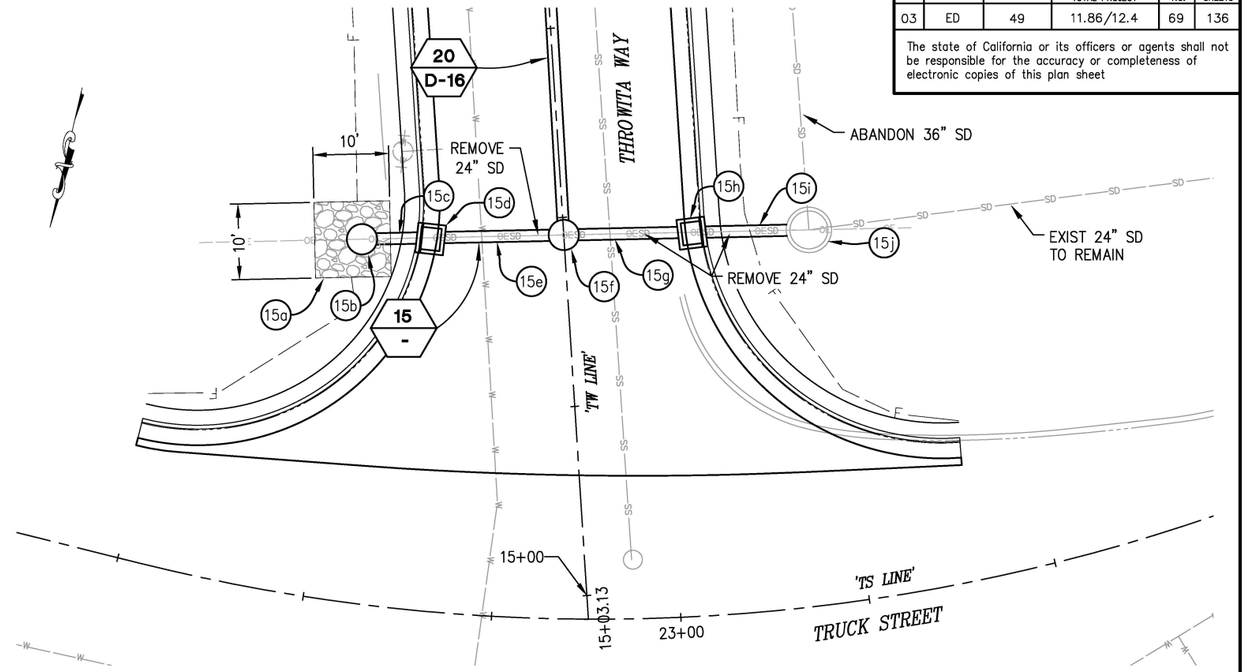

15 PLAN-SD SYSTEM 15

SCALE: 1" = 10'

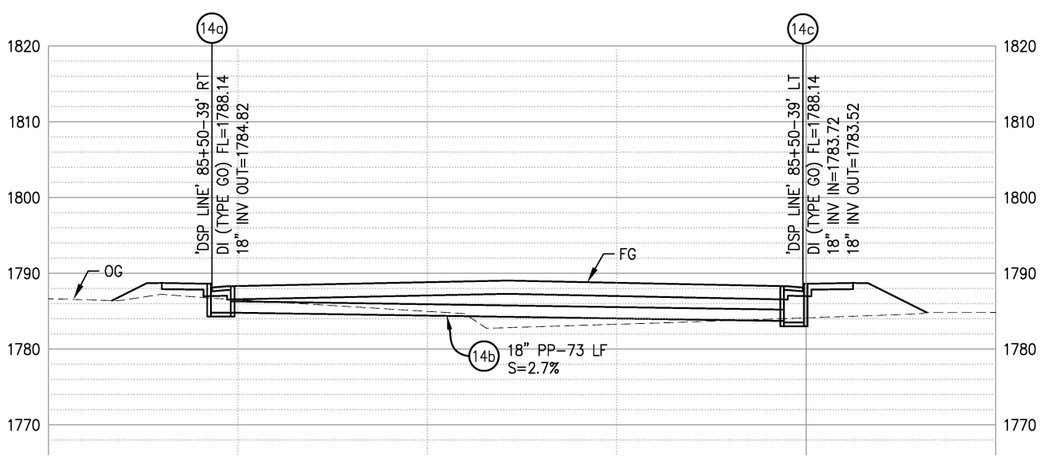

14 PROFILE-SD SYSTEM 14

SCALE: 1" = 10'

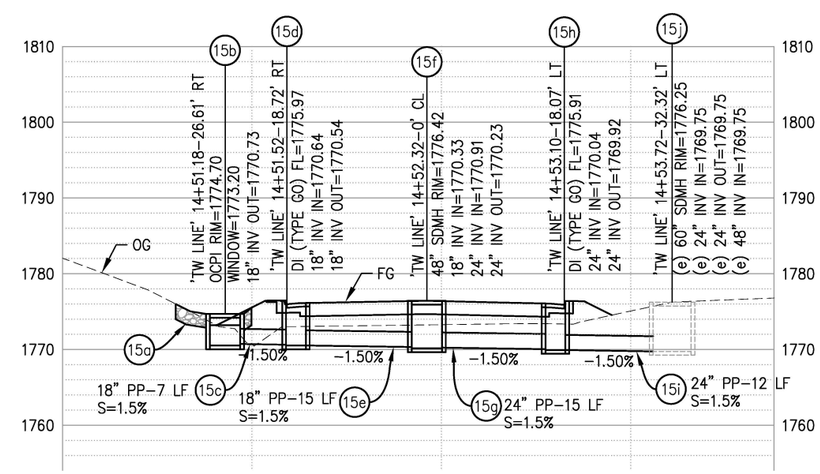

15 PROFILE-SD SYSTEM 15

SCALE: 1" = 10'

THIS SHEET ACCURATE FOR DRAINAGE WORK ONLY

DRAINAGE SYSTEM 14 & 15
SCALE: AS SHOWN

CU ####
EA 03-0E961

ORIGINAL SCALE IS IN INCHES
Drawing name: Z:\Civil 3D Projects\72334 Diamond Springs Pkwy\CADD Files\Sheets\Ultimate\D Sheets.dwg Layout Tab: D-12 Jan 17,2025 - 12:09am DHarrington

FOR REDUCED PLANS 0 1 2

REVISION			
NUMBER	DATE	DESCRIPTION	BY

REGISTERED PROFESSIONAL ENGINEER DUSTIN W. HARRINGTON No. C71517 License Expires 12-31-25 CIVIL STATE OF CALIFORNIA

PREPARED UNDER THE SUPERVISION OF :

REGISTERED CIVIL ENGINEER

1/28/2025
DATE:

DESIGNED: DH	DRAWN: AN
CHECKED: JN	DATE: 1/28/2025
ROAD NUMBER:	

EL DORADO COUNTY CALIFORNIA

COUNTY OF EL DORADO
DEPARTMENT OF TRANSPORTATION

DIAMOND SPRINGS PARKWAY
PHASE 1B

25-0053 E 24 of 45

SHEET
D-12
69 OF 136

W.O. No. 72334

DIST	COUNTY	ROUTE	KILOMETER POSTS TOTAL PROJECT	SHEET NO.	TOTAL SHEETS
03	ED	49	11.86/12.4	70	136

The state of California or its officers or agents shall not be responsible for the accuracy or completeness of electronic copies of this plan sheet

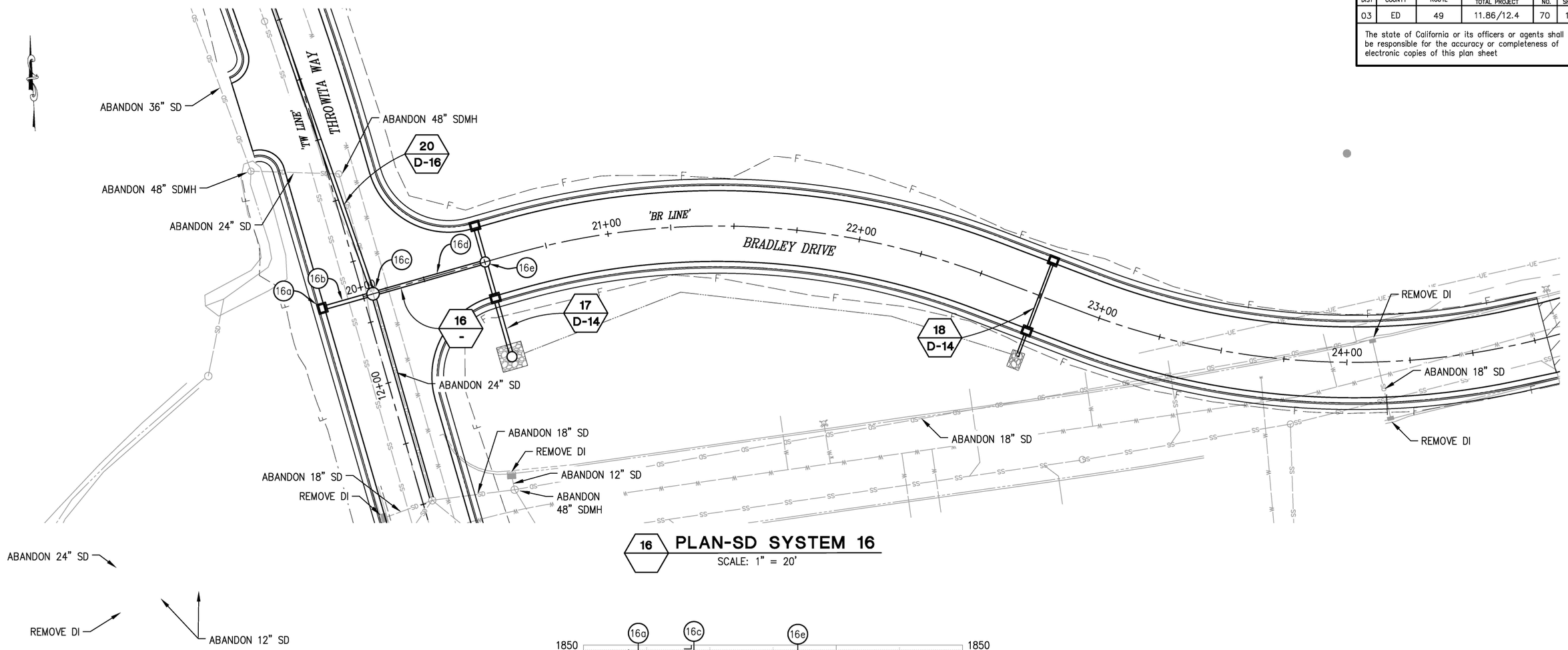

16 PLAN-SD SYSTEM 16

SCALE: 1" = 20'

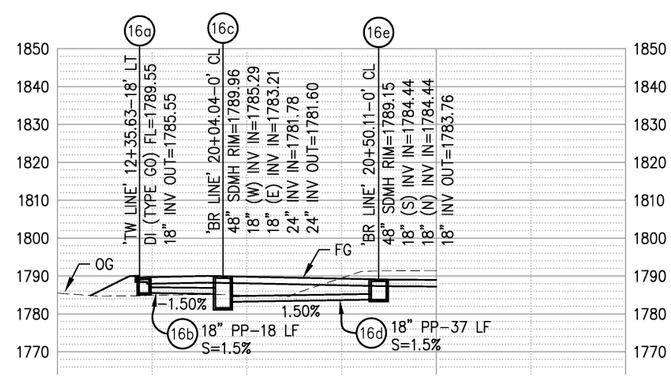

16 PROFILE-SD SYSTEM 16

SCALE: 1" = 20'

THIS SHEET ACCURATE FOR DRAINAGE WORK ONLY

DRAINAGE SYSTEM 16
SCALE: AS SHOWN

CU #### | EA 03-0E961

REVISION			
NUMBER	DATE	DESCRIPTION	BY

REGISTERED PROFESSIONAL ENGINEER DUSTIN W. HARRINGTON No. C71517 License Expires 12-31-25 CIVIL STATE OF CALIFORNIA

PREPARED UNDER THE SUPERVISION OF :

REGISTERED CIVIL ENGINEER 1/28/2025 DATE:

DESIGNED: DH	DRAWN: AN
CHECKED: JN	DATE: 1/28/2025
ROAD NUMBER:	

EL DORADO COUNTY CALIFORNIA

COUNTY OF EL DORADO
DEPARTMENT OF TRANSPORTATION

DIAMOND SPRINGS PARKWAY
PHASE 1B
25-0053 E 25 of 45

SHEET D-13
70 OF 136
W.O. No. 72334

FOR REDUCED PLANS 0 1 2
ORIGINAL SCALE IS IN INCHES
Drawing name: Z:\Civil 3D Projects\72334 Diamond Springs Pkwy\CADD Files\Sheets\Ultimate\D Sheets.dwg Layout Tab: D-13 Jan 17,2025 - 12:10am DHarrington

DIST	COUNTY	ROUTE	KILOMETER POSTS TOTAL PROJECT	SHEET NO.	TOTAL SHEETS
03	ED	49	11.86/12.4	71	136

The state of California or its officers or agents shall not be responsible for the accuracy or completeness of electronic copies of this plan sheet

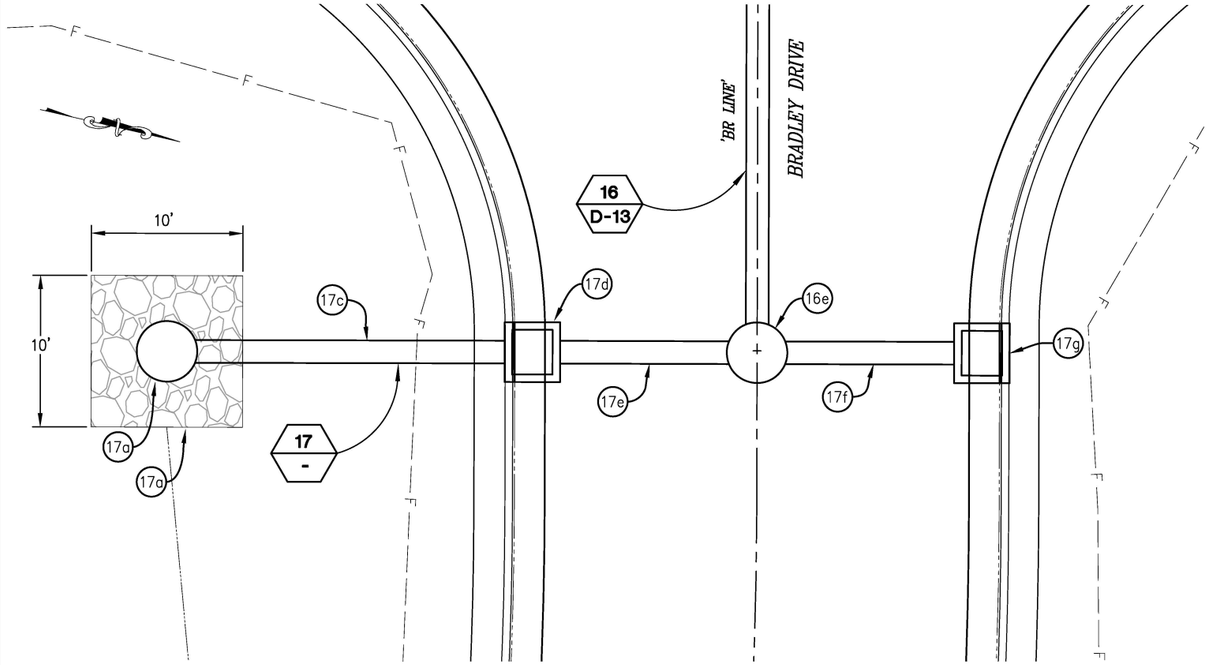

17 PLAN-SD SYSTEM 17

SCALE: 1" = 5'

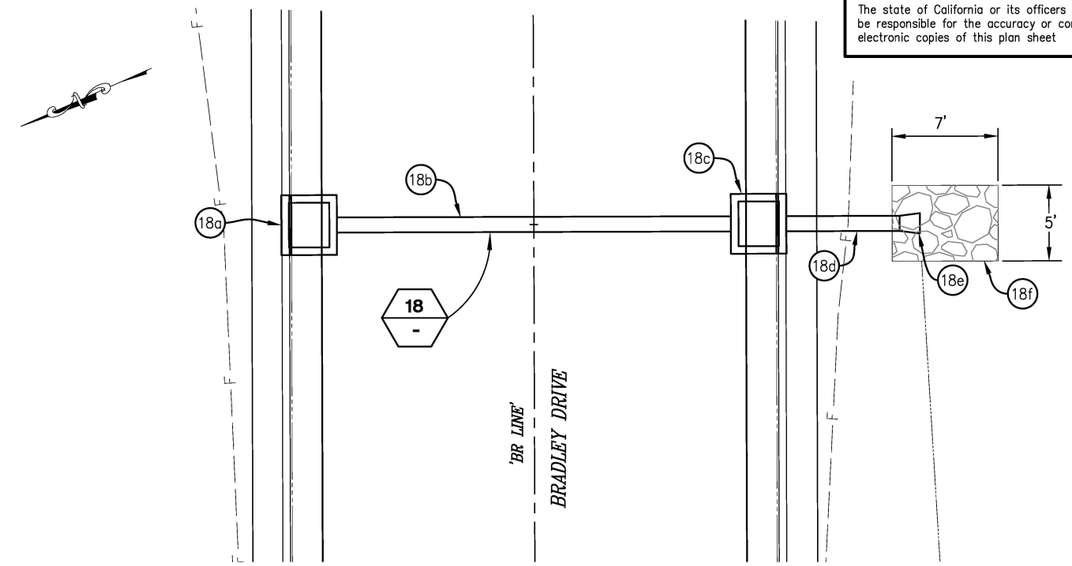

18 PLAN-SD SYSTEM 18

SCALE: 1" = 5'

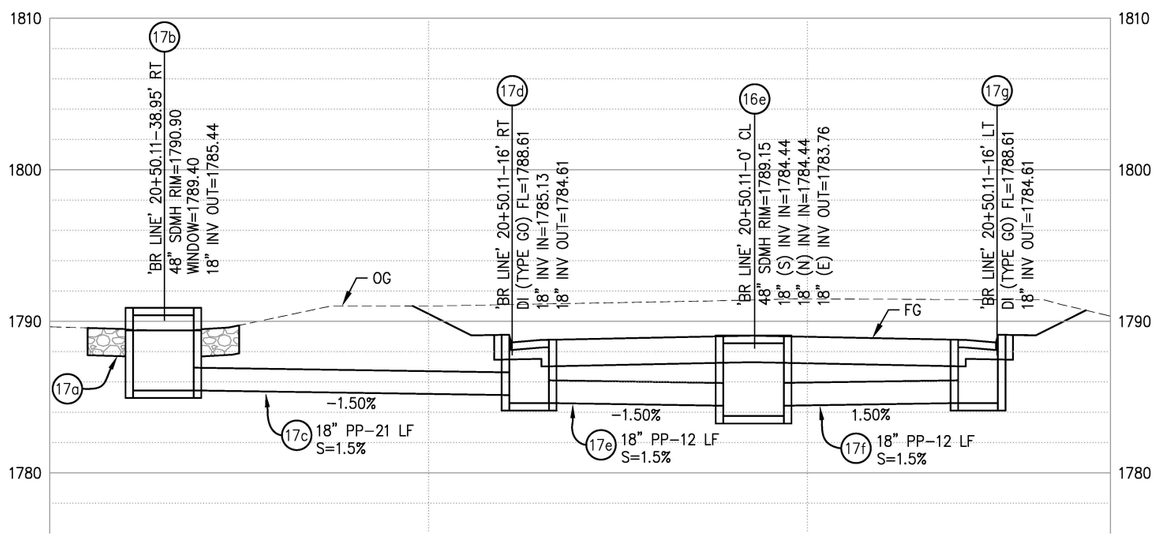

17 PROFILE-SD SYSTEM 17

SCALE: 1" = 5'

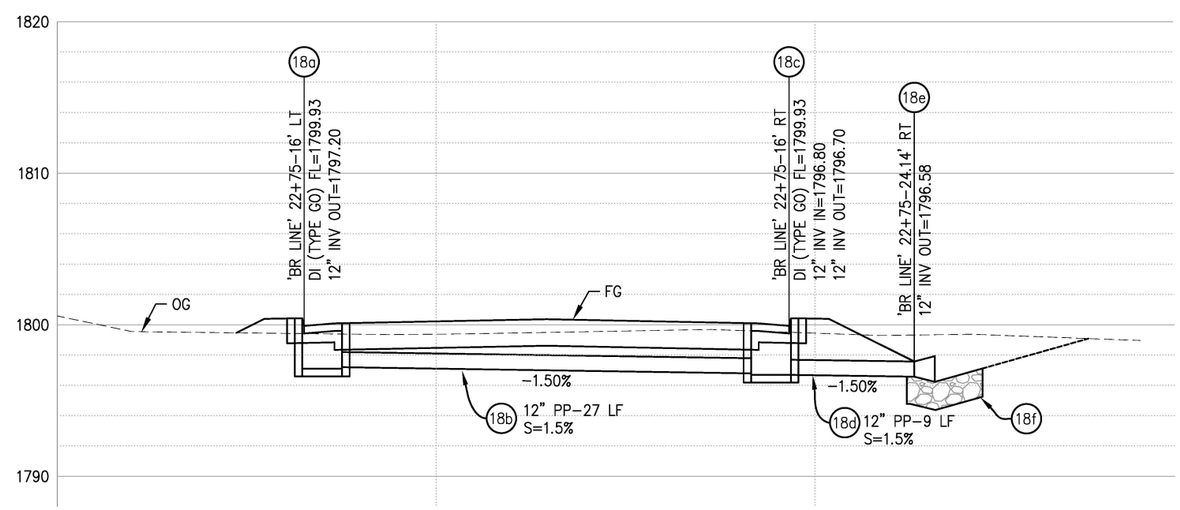

18 PROFILE-SD SYSTEM 18

SCALE: 1" = 5'

THIS SHEET ACCURATE FOR DRAINAGE WORK ONLY

DRAINAGE SYSTEM 17 & 18
SCALE: AS SHOWN

CU ####
EA 03-0E961

ORIGINAL SCALE IS IN INCHES
Drawing name: Z:\Civil 3D Projects\72334 Diamond Springs Pkwy\CADD Files\Sheets\Ultimate\D Sheets.dwg Layout Tab: D-14 Jan 17,2025 - 12:11am DHarrington

FOR REDUCED PLANS 0 1 2

REVISION			
NUMBER	DATE	DESCRIPTION	BY

REGISTERED PROFESSIONAL ENGINEER DUSTIN W. HARRINGTON No. C71517 License Expires 12-31-25 CIVIL STATE OF CALIFORNIA

PREPARED UNDER THE SUPERVISION OF :

REGISTERED CIVIL ENGINEER 1/28/2025 DATE:

DESIGNED: DH	DRAWN: AN
CHECKED: JN	DATE: 1/28/2025
ROAD NUMBER:	

EL DORADO COUNTY CALIFORNIA

COUNTY OF EL DORADO
DEPARTMENT OF TRANSPORTATION

DIAMOND SPRINGS PARKWAY
PHASE 1B

SHEET **D-14**

W.O. No. **72334**

DIST	COUNTY	ROUTE	KILOMETER POSTS TOTAL PROJECT	SHEET NO.	TOTAL SHEETS
03	ED	49	11.86/12.4	72	136

The state of California or its officers or agents shall not be responsible for the accuracy or completeness of electronic copies of this plan sheet

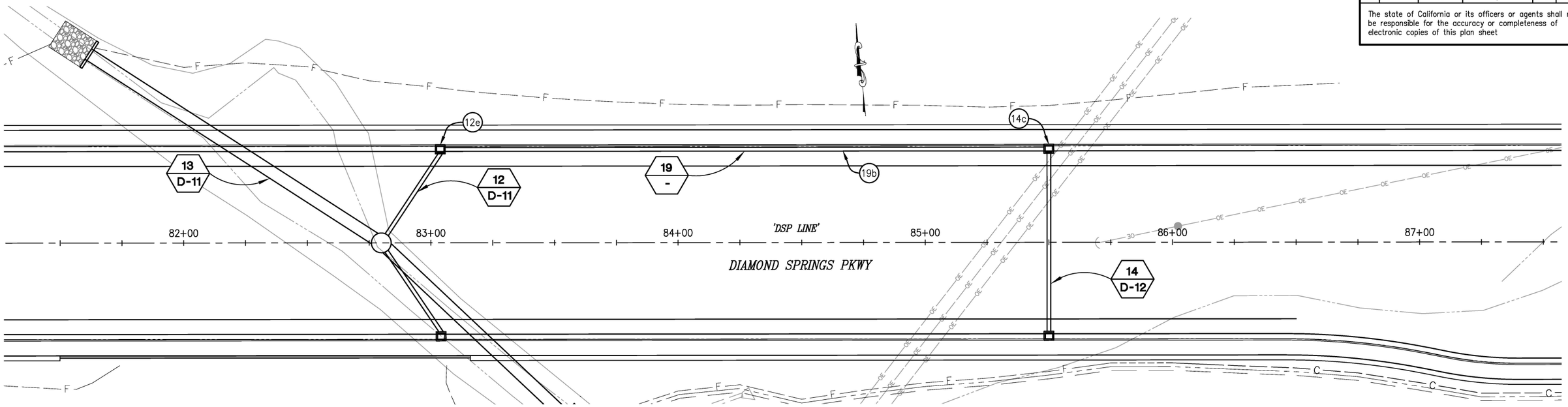

19 PLAN-SD SYSTEM 19

SCALE: 1" = 20'

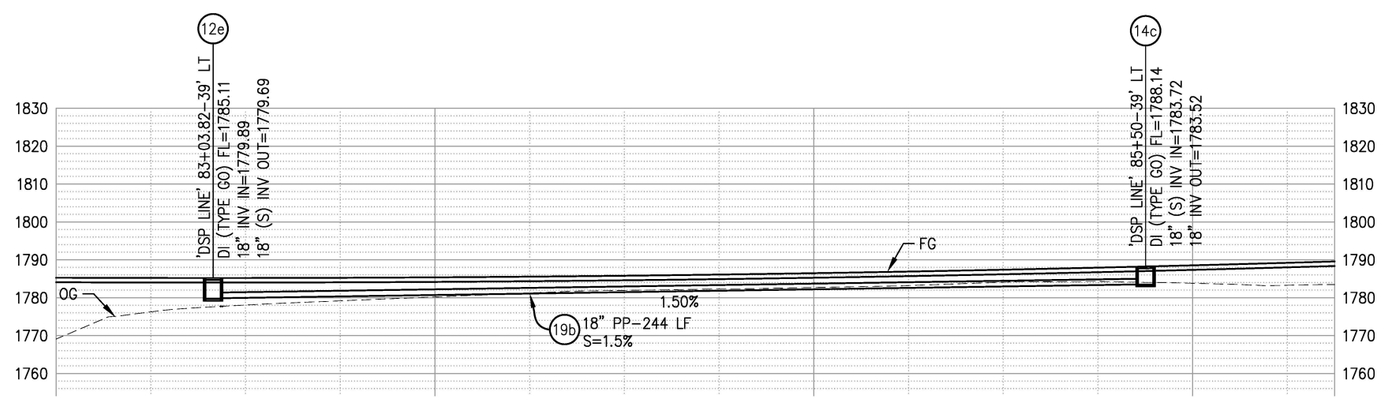

19 PROFILE-SD SYSTEM 19

SCALE: 1" = 20'

THIS SHEET ACCURATE FOR DRAINAGE WORK ONLY

DRAINAGE SYSTEM 19
SCALE: AS SHOWN

CU ####
EA 03-0E961

REVISION			
NUMBER	DATE	DESCRIPTION	BY

REGISTERED PROFESSIONAL ENGINEER DUSTIN W. HARRINGTON No. C71517 License Expires 12-31-25 CIVIL STATE OF CALIFORNIA

PREPARED UNDER THE SUPERVISION OF :

REGISTERED CIVIL ENGINEER

1/28/2025
DATE:

DESIGNED: DH	DRAWN: AN
CHECKED: JN	DATE: 1/28/2025
ROAD NUMBER:	

EL DORADO COUNTY CALIFORNIA

COUNTY OF EL DORADO
DEPARTMENT OF TRANSPORTATION

DIAMOND SPRINGS PARKWAY
PHASE 1B
25-0053 E 27 of 45

SHEET D-15
72 OF 136
W.O. No. 72334

ORIGINAL SCALE IS IN INCHES
Drawing name: Z:\Civil 3D Projects\72334 Diamond Springs Pkwy\CADD Files\Sheets\Ultimate\D Sheets.dwg Layout Tab: D-15 Jan 17,2025 - 12:11am DHarrington

FOR REDUCED PLANS 0 1 2

DIST	COUNTY	ROUTE	KILOMETER POSTS TOTAL PROJECT	SHEET NO.	TOTAL SHEETS
03	ED	49	11.86/12.4	73	136

The state of California or its officers or agents shall not be responsible for the accuracy or completeness of electronic copies of this plan sheet

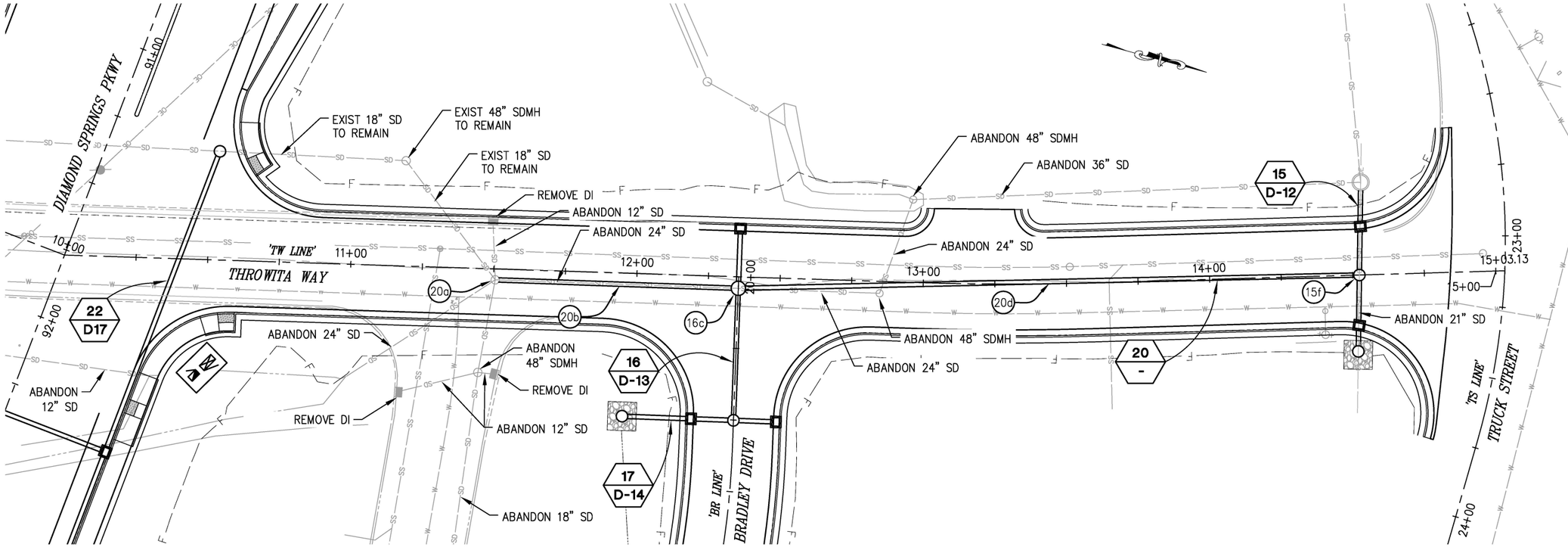

20 PLAN-SD SYSTEM 20

SCALE: 1" = 20'

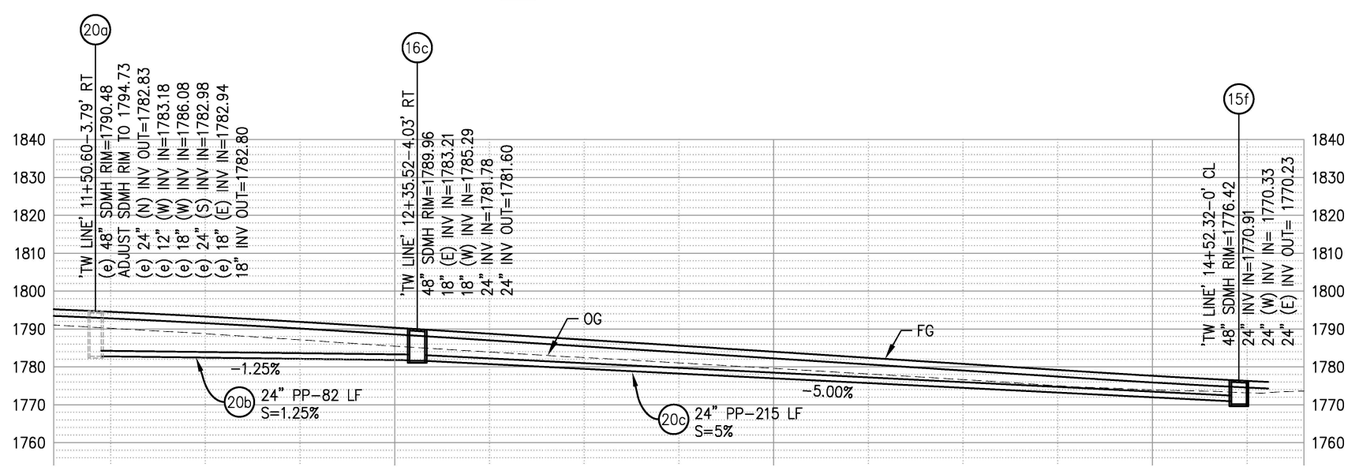

20 PROFILE-SD SYSTEM 20

SCALE: 1" = 20'

THIS SHEET ACCURATE FOR DRAINAGE WORK ONLY

DRAINAGE SYSTEM 20
SCALE: AS SHOWN

CU #### | EA 03-0E961

ORIGINAL SCALE IS IN INCHES
Drawing name: Z:\Civil 3D Projects\72334 Diamond Springs Pkwy\CADD Files\Sheets\Ultimate\D Sheets.dwg Layout Tab: D-16 Jan 17,2025 - 12:12am Dharrington

FOR REDUCED PLANS 0 1 2

REVISION			
NUMBER	DATE	DESCRIPTION	BY

REGISTERED PROFESSIONAL ENGINEER DUSTIN W. HARRINGTON No. C71517 License Expires 12-31-25 CIVIL STATE OF CALIFORNIA

PREPARED UNDER THE SUPERVISION OF :

REGISTERED CIVIL ENGINEER 1/28/2025 DATE:

DESIGNED: DH	DRAWN: AN
CHECKED: JN	DATE: 1/28/2025
ROAD NUMBER:	

EL DORADO COUNTY CALIFORNIA

COUNTY OF EL DORADO
DEPARTMENT OF TRANSPORTATION

DIAMOND SPRINGS PARKWAY
PHASE 1B
25-0053 E 28 of 45

SHEET D-16
73 OF 136
W.O. No. 72334

DIST	COUNTY	ROUTE	KILOMETER POSTS TOTAL PROJECT	SHEET NO.	TOTAL SHEETS
03	ED	49	11.86/12.4	74	136

The state of California or its officers or agents shall not be responsible for the accuracy or completeness of electronic copies of this plan sheet

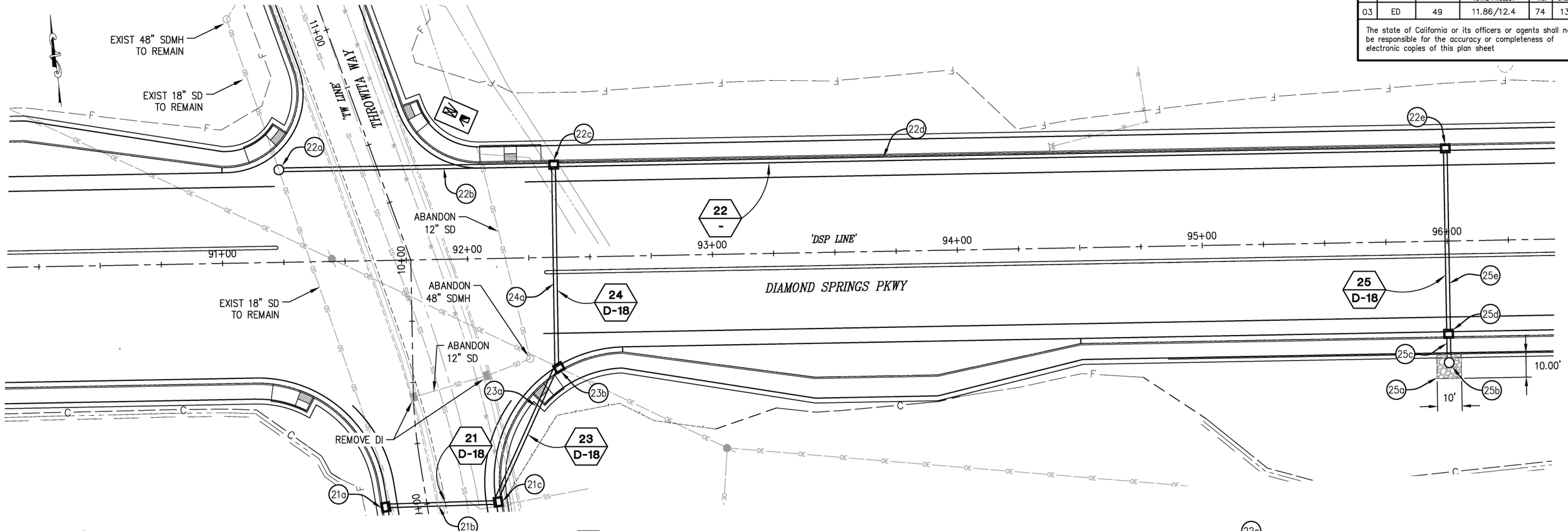

22 PLAN-SD SYSTEM 21, 22, 23, 24, 25

SCALE: 1" = 20'

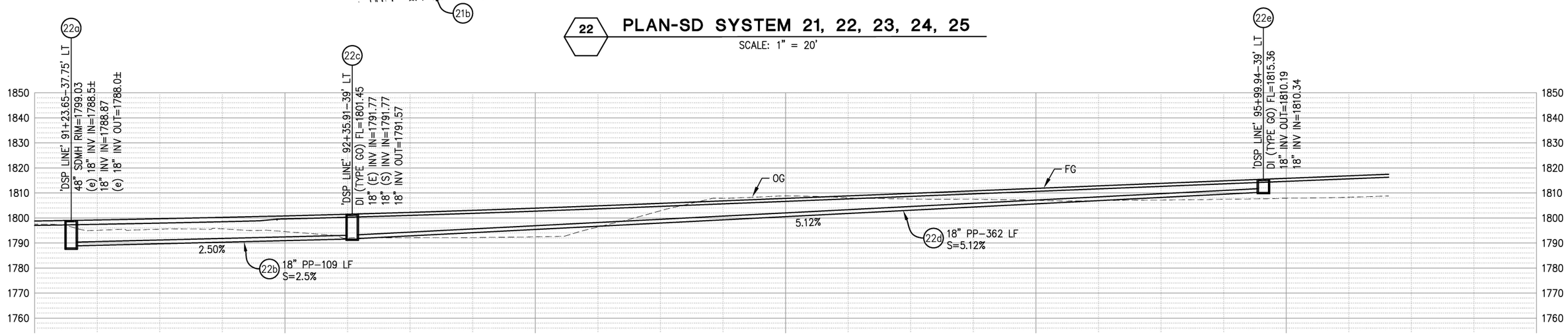

22 PROFILE-SD SYSTEM 22

SCALE: 1" = 20'

THIS SHEET ACCURATE FOR DRAINAGE WORK ONLY

DRAINAGE SYSTEM 22
SCALE: AS SHOWN

CU #### | EA 03-0E961

ORIGINAL SCALE IS IN INCHES
FOR REDUCED PLANS
0 1 2

Drawing name: Z:\Civil 3D Projects\72334 Diamond Springs Pkwy\CADD Files\Sheets\Ultimate\D Sheets.dwg Layout Tab: D-17 Jan 17,2025 - 12:13am DHarrington

REVISION			
NUMBER	DATE	DESCRIPTION	BY

REGISTERED PROFESSIONAL ENGINEER DUSTIN W. HARRINGTON No. C71517 License Expires 12-31-25 CIVIL STATE OF CALIFORNIA

PREPARED UNDER THE SUPERVISION OF :

REGISTERED CIVIL ENGINEER

DATE: 1/28/2025

DESIGNED:	DRAWN:
DH	AN
CHECKED:	DATE:
JN	1/28/2025
ROAD NUMBER:	

EL DORADO COUNTY CALIFORNIA

COUNTY OF EL DORADO
DEPARTMENT OF TRANSPORTATION

DIAMOND SPRINGS PARKWAY
PHASE 1B

25-0053 E 29 of 45

SHEET **D-17**
74 OF 136

W.O. No. **72334**

DIST	COUNTY	ROUTE	KILOMETER POSTS TOTAL PROJECT	SHEET NO.	TOTAL SHEETS
03	ED	49	11.86/12.4	75	136

The state of California or its officers or agents shall not be responsible for the accuracy or completeness of electronic copies of this plan sheet

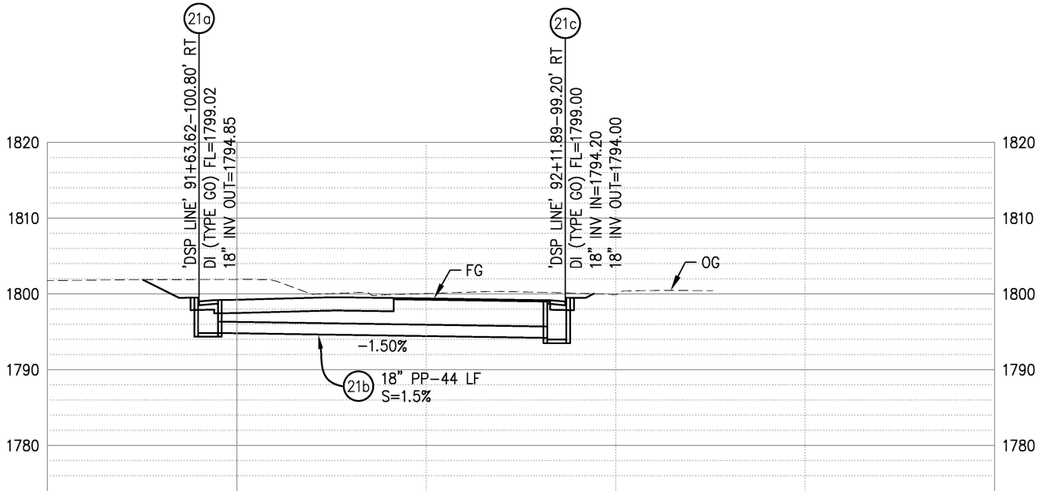

21 PROFILE-SD SYSTEM 21

SCALE: 1" = 10'

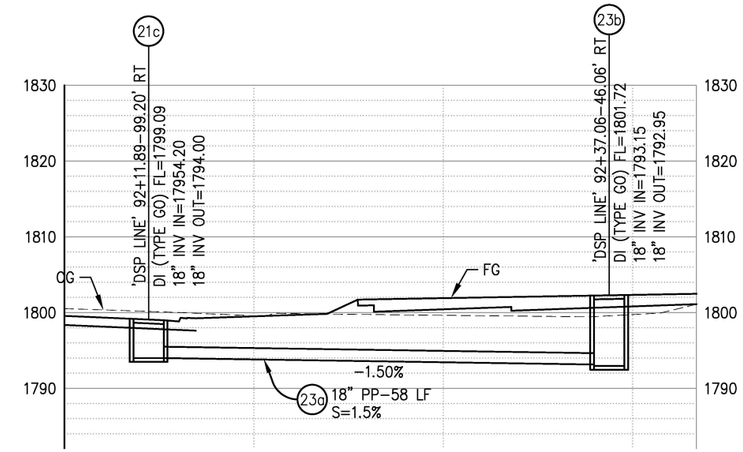

23 PROFILE-SD SYSTEM 23

SCALE: 1" = 10'

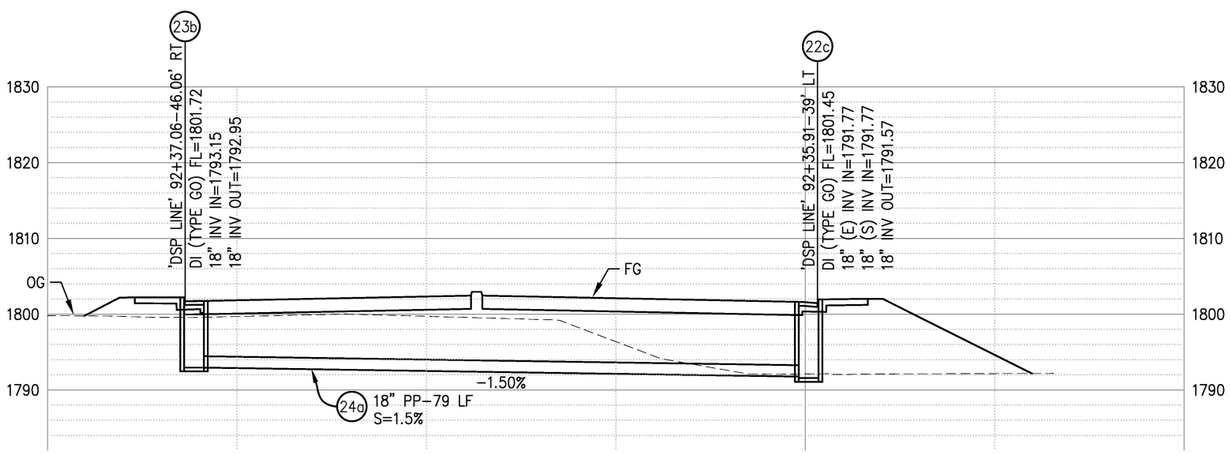

24 PROFILE-SD SYSTEM 24

SCALE: 1" = 10'

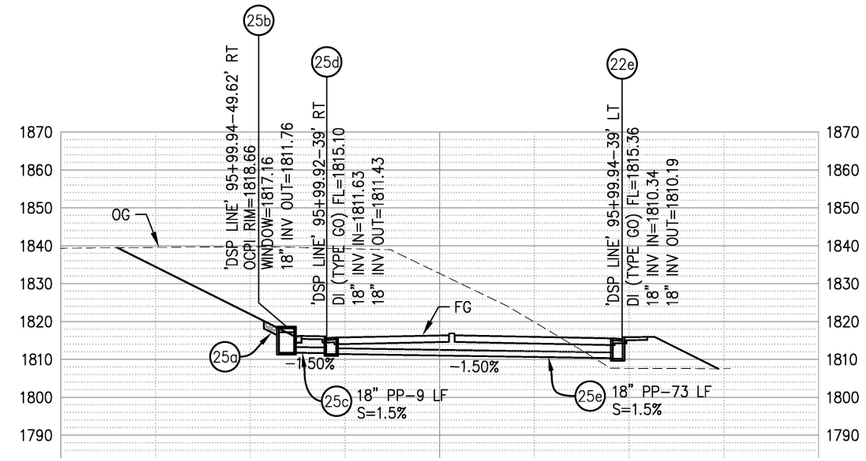

25 PROFILE-SD SYSTEM 25

SCALE: 1" = 20'

THIS SHEET ACCURATE FOR DRAINAGE WORK ONLY

DRAINAGE SYSTEM 21, 23, 24, & 25
SCALE: AS SHOWN

CU ####	EA 03-0E961

REVISION			
NUMBER	DATE	DESCRIPTION	BY

REGISTERED PROFESSIONAL ENGINEER DUSTIN W. HARRINGTON No. C71517 License Expires 12-31-25 CIVIL STATE OF CALIFORNIA

PREPARED UNDER THE SUPERVISION OF :

REGISTERED CIVIL ENGINEER

DATE: 1/28/2025

DESIGNED: DH	DRAWN: AN
CHECKED: JN	DATE: 1/28/2025
ROAD NUMBER:	

EL DORADO COUNTY CALIFORNIA

COUNTY OF EL DORADO
DEPARTMENT OF TRANSPORTATION

DIAMOND SPRINGS PARKWAY
PHASE 1B

25-0053 E 30 of 45

SHEET **D-18**
75 OF 136
W.O. No. **72334**

ORIGINAL SCALE IS IN INCHES
Drawing name: Z:\Civil 3D Projects\72334 Diamond Springs Pkwy\CADD Files\Sheets\Ultimate\D Sheets.dwg Layout Tab: D-18 Jan 17,2025 - 12:14am DHarrington

FOR REDUCED PLANS 0 1 2

DIST	COUNTY	ROUTE	KILOMETER POSTS TOTAL PROJECT	SHEET NO.	TOTAL SHEETS
03	ED	49	11.86/12.4	76	136

The state of California or its officers or agents shall not be responsible for the accuracy or completeness of electronic copies of this plan sheet

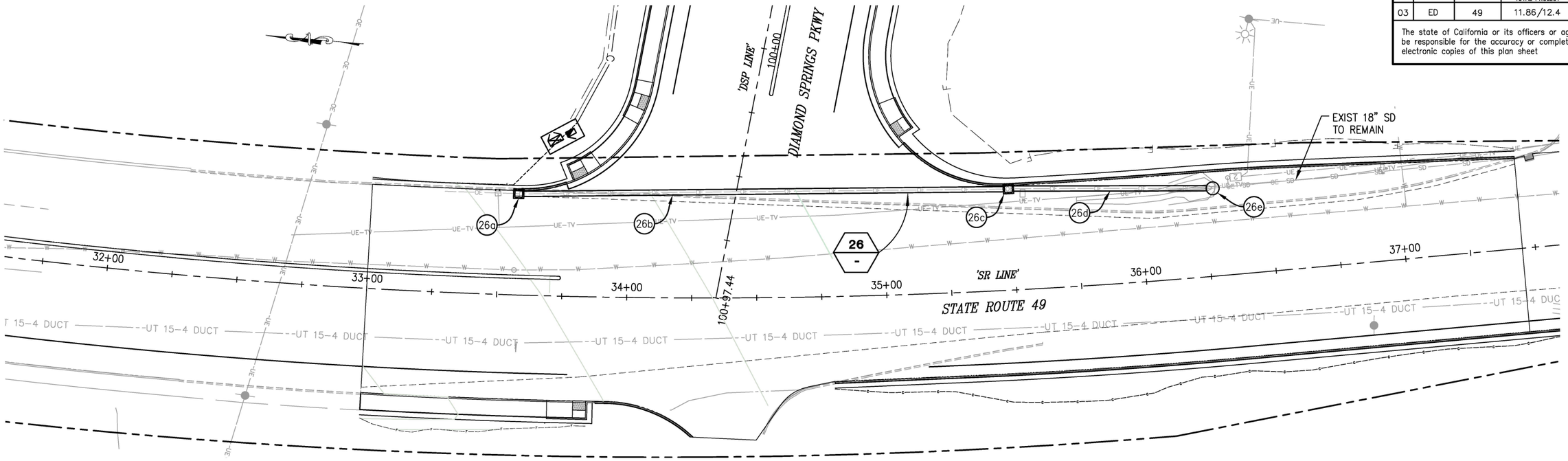

26 PLAN-SD SYSTEM 26

SCALE: 1" = 20'

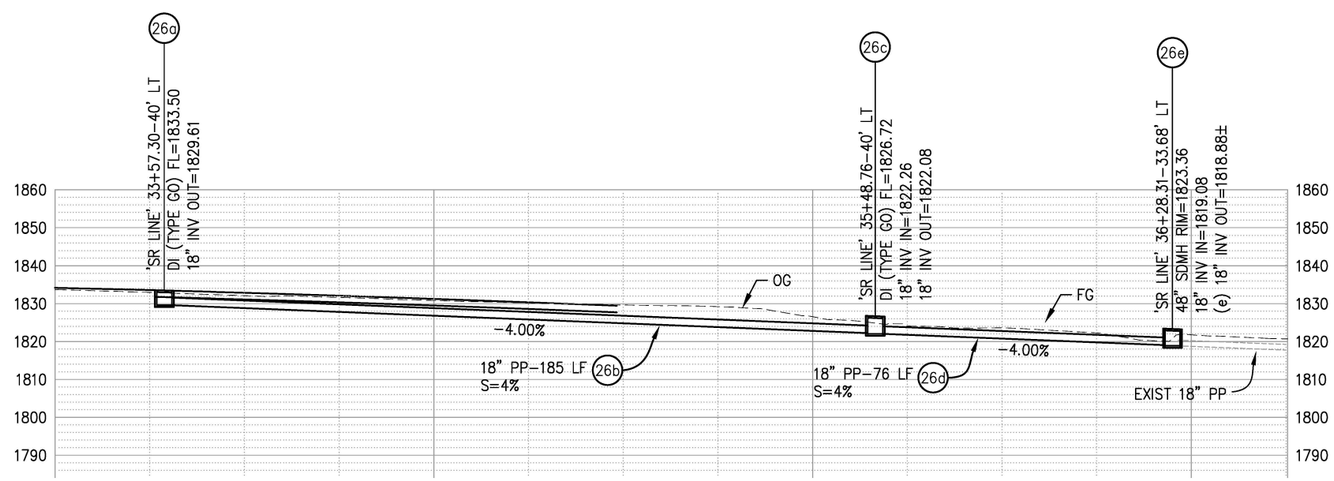

26 PROFILE-SD SYSTEM 26

SCALE: 1" = 20'

THIS SHEET ACCURATE FOR DRAINAGE WORK ONLY

DRAINAGE SYSTEM 26
SCALE: AS SHOWN

CU ####
EA 03-0E961

REVISION			
NUMBER	DATE	DESCRIPTION	BY

REGISTERED PROFESSIONAL ENGINEER DUSTIN W. HARRINGTON No. C71517 License Expires 12-31-25 CIVIL STATE OF CALIFORNIA

PREPARED UNDER THE SUPERVISION OF :

REGISTERED CIVIL ENGINEER

1/28/2025
DATE:

DESIGNED: DH	DRAWN: AN
CHECKED: JN	DATE: 1/28/2025
ROAD NUMBER:	

EL DORADO COUNTY CALIFORNIA

COUNTY OF EL DORADO
DEPARTMENT OF TRANSPORTATION

DIAMOND SPRINGS PARKWAY
PHASE 1B
25-0053 E 31 of 45

SHEET
D-19
76 OF 136
W.O. No. 72334

FOR REDUCED PLANS
0 1 2
ORIGINAL SCALE IS IN INCHES
Drawing name: Z:\Civil 3D Projects\72334 Diamond Springs Pkwy\CADD Files\Sheets\Ultimate\D Sheets.dwg Layout Tab: D-19 Jan 17,2025 - 12:15am DHarrington

DIST	COUNTY	ROUTE	KILOMETER POSTS TOTAL PROJECT	SHEET NO.	TOTAL SHEETS
03	ED	49	11.86/12.4	77	136

The state of California or its officers or agents shall not be responsible for the accuracy or completeness of electronic copies of this plan sheet

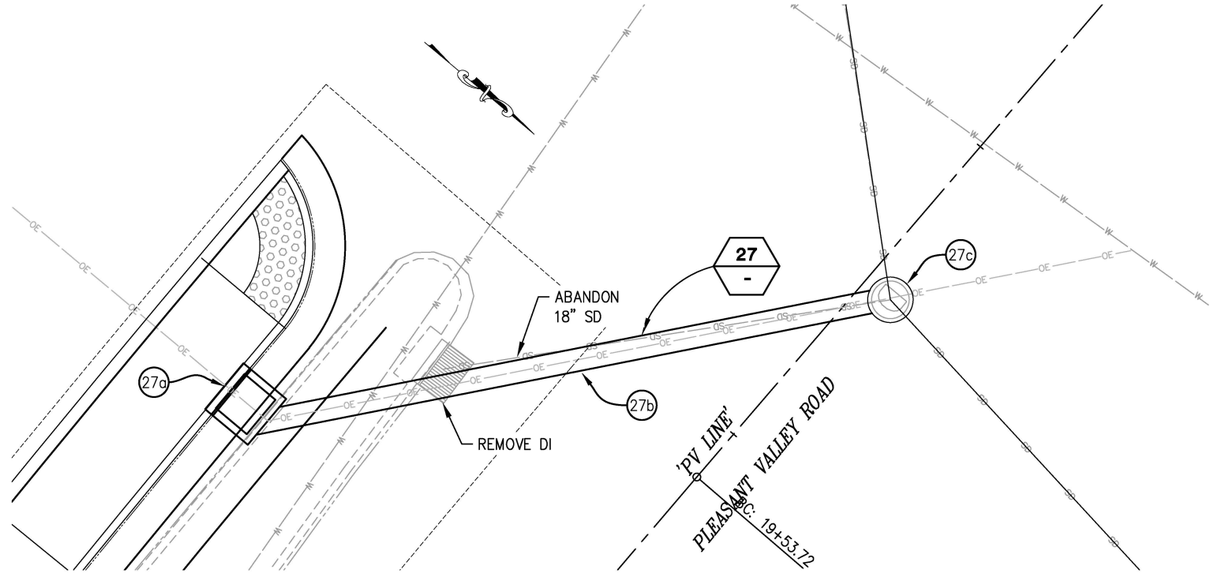

27 PLAN-SD SYSTEM 27

SCALE: 1" = 5'

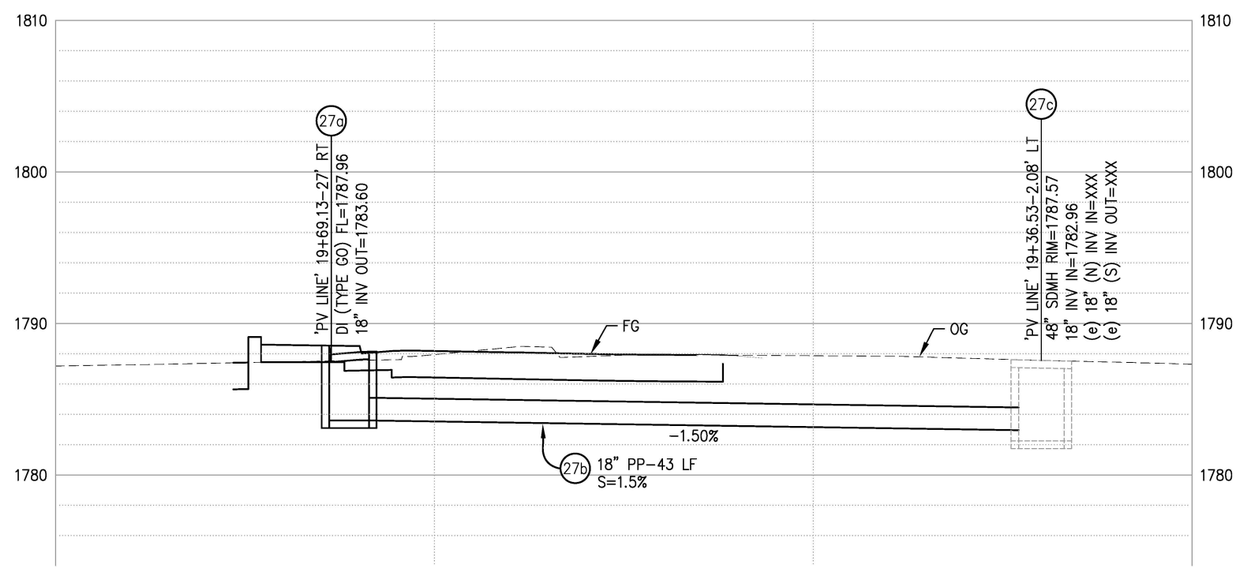

27 PROFILE-SD SYSTEM 27

SCALE: 1" = 5'

THIS SHEET ACCURATE FOR DRAINAGE WORK ONLY

DRAINAGE SYSTEM 27
SCALE: AS SHOWN

CU ### | EA 03-0E961

ORIGINAL SCALE IS IN INCHES
FOR REDUCED PLANS 0 1 2

Drawing name: Z:\Civil 3D Projects\72334 Diamond Springs Pkwy\CADD Files\Sheets\Ultimate\D Sheets.dwg Layout Tab: D-20 Jan 17,2025 - 12:16am DHarrington

REVISION			
NUMBER	DATE	DESCRIPTION	BY

REGISTERED PROFESSIONAL ENGINEER DUSTIN W. HARRINGTON No. C71517 License Expires 12-31-25 CIVIL STATE OF CALIFORNIA

PREPARED UNDER THE SUPERVISION OF :

REGISTERED CIVIL ENGINEER 1/28/2025 DATE:

DESIGNED: DH	DRAWN: AN
CHECKED: JN	DATE: 1/28/2025
ROAD NUMBER:	

EL DORADO COUNTY CALIFORNIA

COUNTY OF EL DORADO
DEPARTMENT OF TRANSPORTATION

DIAMOND SPRINGS PARKWAY
PHASE 1B

SHEET **D-20**

W.O. No. **72334**

DIST	COUNTY	ROUTE	KILOMETER POSTS TOTAL PROJECT	SHEET NO.	TOTAL SHEETS
03	ED	49	11.86/12.4	78	136

The state of California or its officers or agents shall not be responsible for the accuracy or completeness of electronic copies of this plan sheet

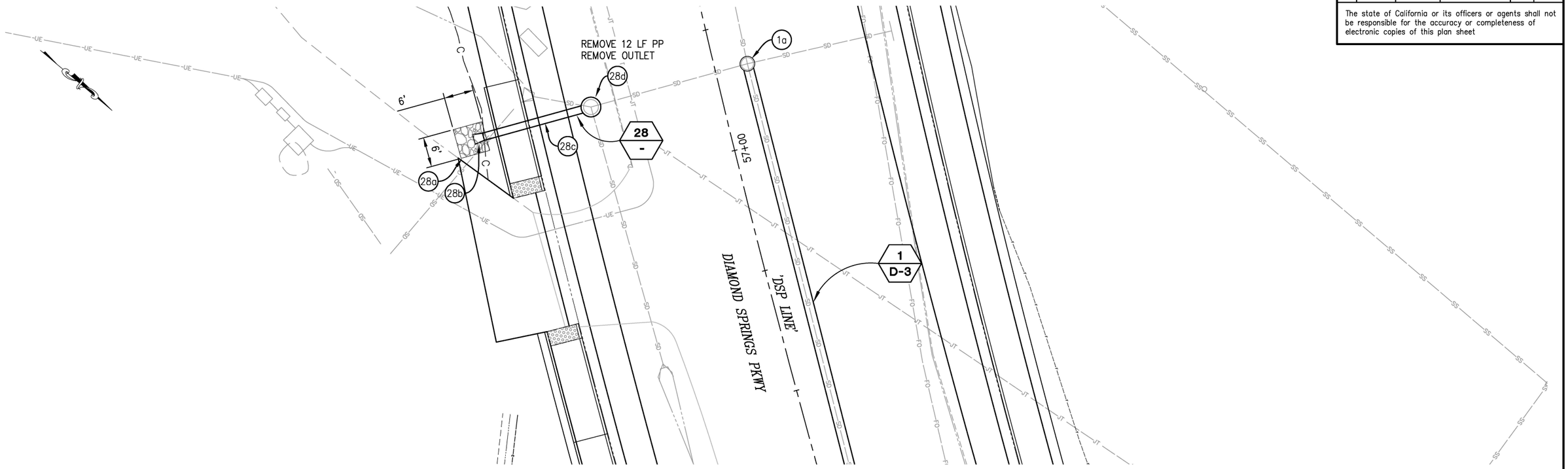

28 PLAN-SD SYSTEM 28

SCALE: 1" = 10'

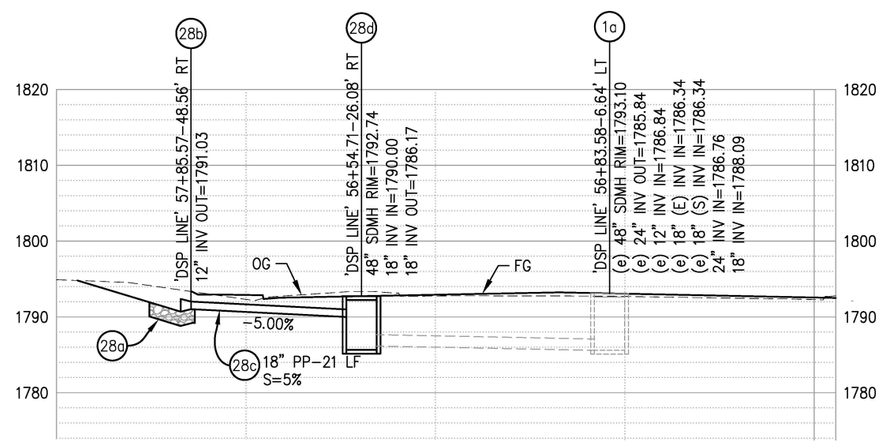

28 PROFILE-SD SYSTEM 28

SCALE: 1" = 10'

THIS SHEET ACCURATE FOR DRAINAGE WORK ONLY

DRAINAGE SYSTEM 28
SCALE: AS SHOWN

CU #### | EA 03-0E961

REVISION			
NUMBER	DATE	DESCRIPTION	BY

REGISTERED PROFESSIONAL ENGINEER DUSTIN W. HARRINGTON No. C71517 License Expires 12-31-25 CIVIL STATE OF CALIFORNIA

PREPARED UNDER THE SUPERVISION OF :

REGISTERED CIVIL ENGINEER 1/28/2025 DATE:

DESIGNED: DH	DRAWN: AN
CHECKED: JN	DATE: 1/28/2025
ROAD NUMBER:	

EL DORADO COUNTY CALIFORNIA

COUNTY OF EL DORADO
DEPARTMENT OF TRANSPORTATION

DIAMOND SPRINGS PARKWAY
PHASE 1B

25-0053 E 33 of 45

SHEET D-21
78 OF 136
W.O. No. 72334

ORIGINAL SCALE IS IN INCHES
Drawing name: Z:\Civil 3D Projects\72334 Diamond Springs Pkwy\CADD Files\Sheets\Ultimate\D Sheets.dwg Layout Tab: D-21 Jan 17,2025 - 12:16am DHarrington

FOR REDUCED PLANS 0 1 2

DIST	COUNTY	ROUTE	KILOMETER POSTS TOTAL PROJECT	SHEET NO.	TOTAL SHEETS
03	ED	49	11.86/12.4	79	136

The state of California or its officers or agents shall not be responsible for the accuracy or completeness of electronic copies of this plan sheet

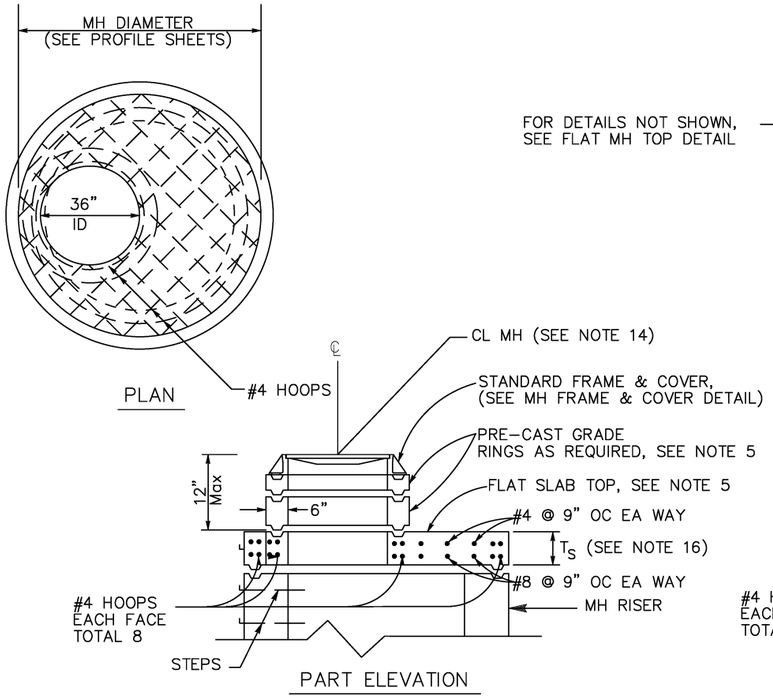

FLAT SLAB TOP DETAIL

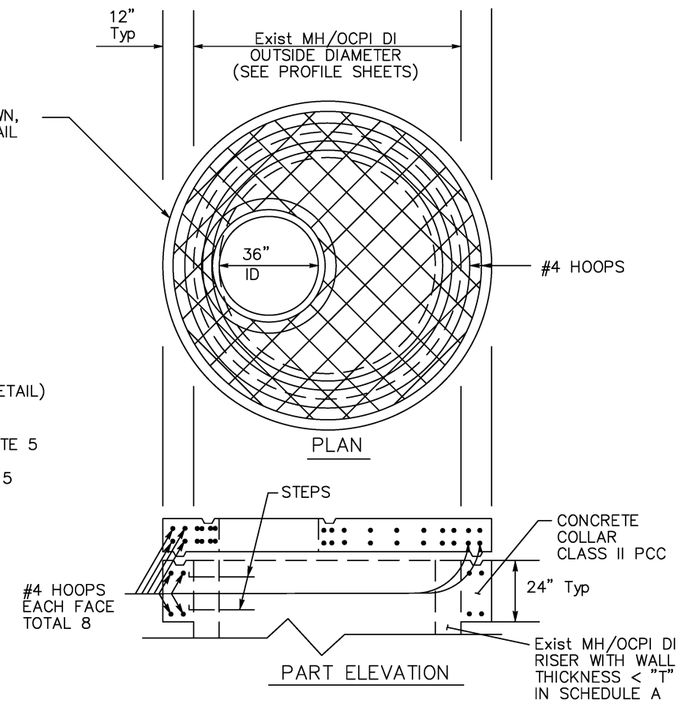

OVERSIZE (OS) FLAT SLAB TOP DETAIL

2a

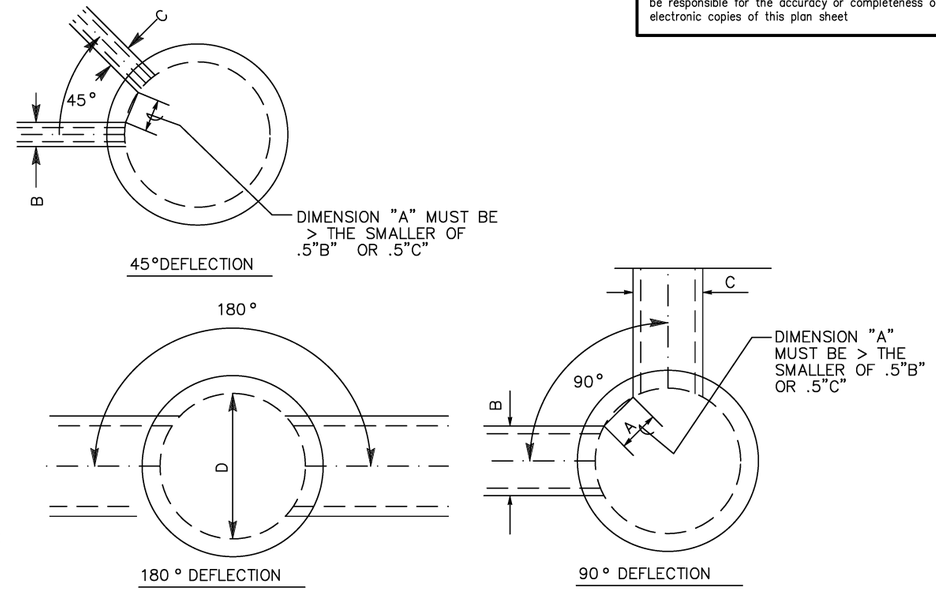

SCHEDULE A

MH STANDARDS						
DIMENSIONS						
NOMINAL	DEFLECTIONS (DEGREES)					
	135–180	90	45		H<=10'–0"	
MH ID	Max PIPE ID	Max PIPE ID	Max PIPE ID	T	Asi	Aso
in	in	in	in	in	si/LF	si/LF
48	30	24	12	5.0	0.16	0.09

NOTES

1. "H" IS THE DIFFERENCE IN ELEVATION BETWEEN THE OUTLET PIPE FLOW LINE AND THE FINISHED GRADE AT THE CENTER OF THE COVER.
2. INLET BOTTOM REINFORCEMENT NOT REQUIRED.
3. STEPS – NONE REQUIRED WHERE "H" IS LESS THAN 2'–6". WHERE "H" IS 2'–6" OR MORE, INSTALL STEPS WITH LOWEST RUNG 12" ABOVE THE FLOOR AND HIGHEST RUNG NOT MORE THAN 6" BELOW TOP OF CONE SECTION OR RISER SECTION IF NO CONE SECTION USED. THE DISTANCE BETWEEN STEPS SHALL NOT EXCEED 12" AND SHALL BE UNIFORM THROUGHOUT THE LENGTH OF THE WALL. PLACE STEPS IN THE SIDE WITHOUT AN OPENING. STEP INSERTS MAY BE SUBSTITUTED FOR THE BAR STEPS. STEP INSERTS SHALL COMPLY WITH STATE INDUSTRIAL SAFETY REQUIREMENTS. SEE REVISED STANDARD PLAN D74 AND STANDARD PLAN D75C FOR STEP DETAILS.
4. JOINTS MAY BE EITHER KEYED OR TONGUE AND GROOVE.
5. RISERS, CONES, AND GRADE RINGS SHALL CONFORM TO ASTM DESIGNATION C–478. ECCENTRIC CONES SHALL BE REQUIRED WHERE NOMINAL MH DIAMETER > 48".
6. FRAME SHALL BE SECURED TO GRADE RINGS, FLAT SLAB, OR CONE WITH CEMENT MORTAR.
7. BASIN FLOORS SHALL HAVE WOOD TROWEL FINISH AND A MINIMUM SLOPE OF 1:4 FROM ALL DIRECTIONS TOWARD OUTLET PIPE.
8. MINIMUM CLEAR DISTANCE BETWEEN ALL PIPE OUTSIDE DIAMETERS AT THE MANHOLE SHALL BE THE GREATER OF: 8" OR HALF THE OUTER DIAMETER OF THE SMALLER PIPE.
9. ALL CAST–IN–PLACE MANHOLES MUST BE FORMED IN A CIRCULAR SHAPE CONSISTENT WITH THE DIAMETER SPECIFIED ON THE PLANS AND REQUIRED TO FIT UPPER PRECAST SECTIONS. MINIMUM WALL THICKNESS SHALL BE AS SHOWN IN SCHEDULE A, EXCEPT THAT THE MINIMUM WALL THICKNESS SHALL BE 6". PRECAST RINGS SHALL BE SET WET OR REQUIRED KEY FORM SHALL BE INCLUDED IN THE FORM WORK TO ACCEPT THE PRECAST KEY. CONCRETE SHALL BE CONSOLIDATED BY AN ACCEPTABLE METHOD TO ENSURE ALL VOIDS ARE REMOVED.
10. PRECAST RISER SECTIONS MAY BE USED WHEN "H" < 8'.
11. THE MANHOLE FRAME AND COVER SHALL BE MADE OF GRAY CAST IRON.
12. ALL PARTS OF THE MANHOLE FRAME AND COVER EXCEPT MACHINED SURFACES SHALL BE COATED WITH ASPHALTUM PAINT.
13. THE MANHOLE FRAME AND COVER SHALL BE TESTED FOR ACCURACY OF FIT AND SHALL BE MARKED IN SETS BEFORE DELIVERY. THE COVER SHALL FIT THE FRAME SNUGLY BUT NOT TIGHTLY.
14. SEE SHEET D–2 FOR STATION AND OFFSET OF MH ℄.
15. CONSTRUCTION PAPER TO BE PLACED BETWEEN CONCRETE COLLAR & OS FLAT SLAB TOP TO FORM JOINT.
16. DIMENSION "T_S" = 8" FOR MH ID <= 96".

ABBREVIATIONS

Asi = INNER CAGE, OR SINGLE CIRCULAR CAGE REINFORCEMENT.
Aso = OUTER CAGE REINFORCEMENT.
si = SQUARE INCHES

DESIGN NOTES

Design Specifications: AASHTO LRFD Bridge Specifications, 6th edition with 2012 interims; Eratta; and CA Amendments.
fy=65 ksi

CIP	PC
f'c=3.6 ksi	f'c=5.0 ksi

1 / DD-1 **STORM DRAIN MANHOLE DETAIL SHEET 1 OR 2** 1a

NO SCALE

THIS SHEET ACCURATE FOR DRAINAGE WORK ONLY

DRAINAGE DETAILS
SCALE: AS SHOWN

CU #### | EA 03–0E961

ORIGINAL SCALE IS IN INCHES
Drawing name: Z:\Civil 3D Projects\72334 Diamond Springs Pkwy\CADD Files\Sheets\Ultimate\D Sheets.dwg Layout Tab: DD-1 Jan 17,2025 – 12:21am DHarrington

FOR REDUCED PLANS 0 1 2

REVISION			
NUMBER	DATE	DESCRIPTION	BY

REGISTERED PROFESSIONAL ENGINEER DUSTIN W. HARRINGTON No. C71517 License Expires 12-31-25 CIVIL STATE OF CALIFORNIA

PREPARED UNDER THE SUPERVISION OF :
REGISTERED CIVIL ENGINEER 1/28/2025
DATE:

DESIGNED: DH	DRAWN: AN
CHECKED: JN	DATE: 1/28/2025
ROAD NUMBER:	

EL DORADO COUNTY CALIFORNIA

COUNTY OF EL DORADO
DEPARTMENT OF TRANSPORTATION

DIAMOND SPRINGS PARKWAY
PHASE 1B
25-0053 E 34 of 45

SHEET **DD-1**
79 OF 136
W.O. No. **72334**

DIST	COUNTY	ROUTE	KILOMETER POSTS TOTAL PROJECT	SHEET NO.	TOTAL SHEETS
03	ED	49	11.86/12.4	80	136

The state of California or its officers or agents shall not be responsible for the accuracy or completeness of electronic copies of this plan sheet

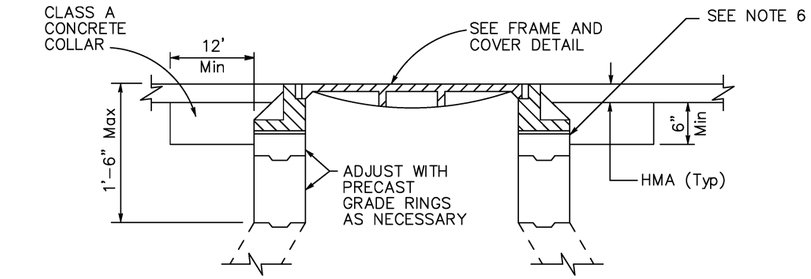

MH GRADE ADJUSTMENT DETAIL

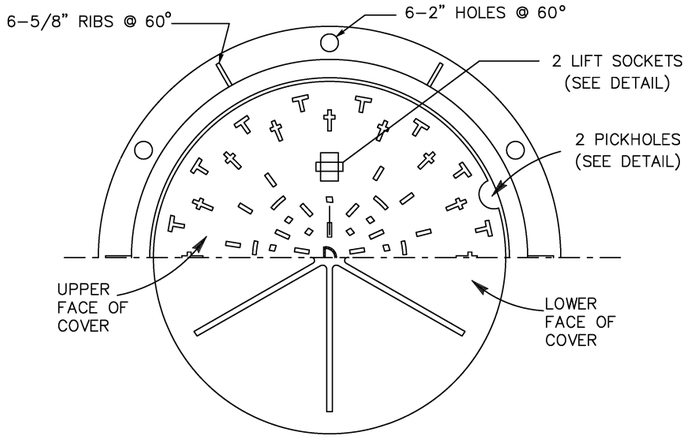

HALF PLAN OF MH FRAME AND COVER

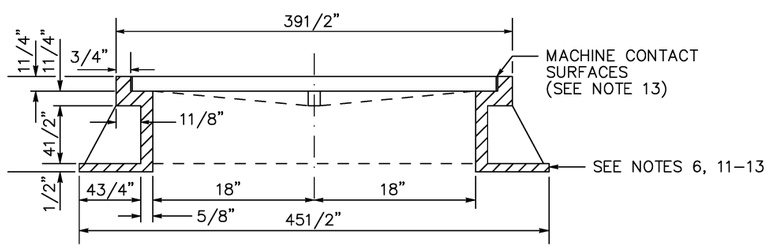

SECTION ON ℄ THROUGH FRAME

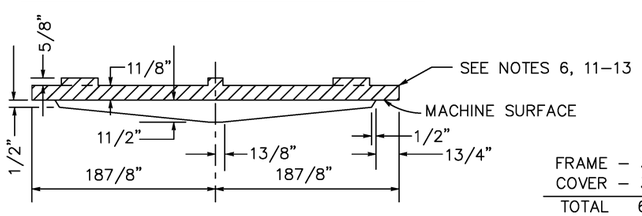

SECTION ON ℄ THROUGH COVER

FRAME –	300 LBS.
COVER –	375 LBS.
TOTAL	675 LBS.

APPROX WEIGHTS

MANHOLE FRAME AND COVER DETAIL

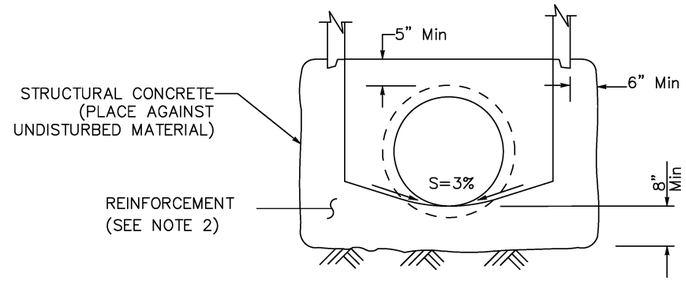

CAST-IN-PLACE BASE

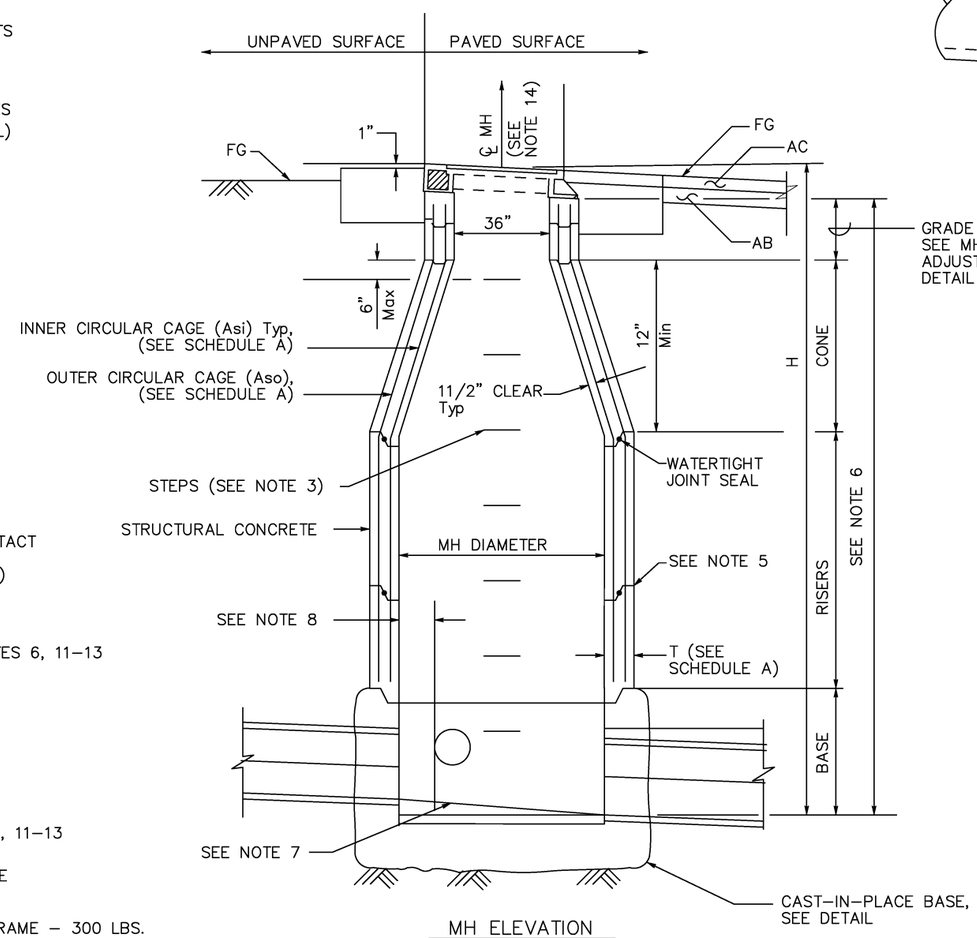

MH ELEVATION

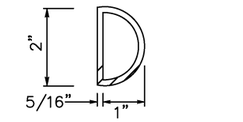

LETTER "D" AT CENTER OF COVER

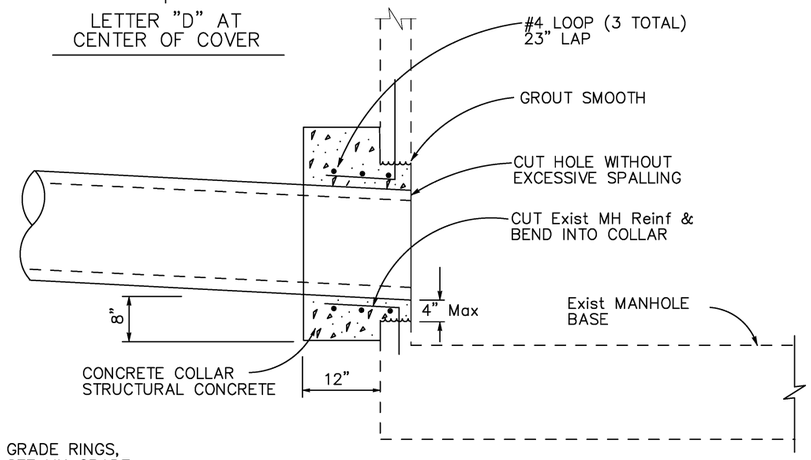

CONNECTION TO Exist MH (3a)

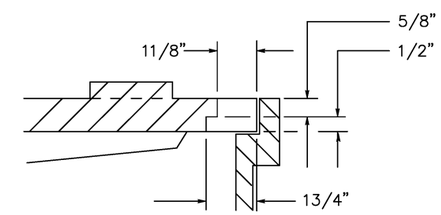

PICK HOLE DETAIL

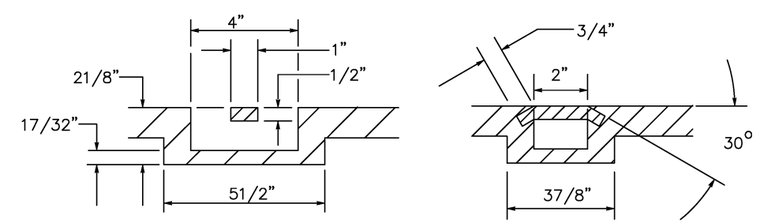

LIFT SOCKET DETAIL

STORM DRAIN MANHOLE DETAIL SHEET 2 OR 2

NO SCALE

THIS SHEET ACCURATE FOR DRAINAGE WORK ONLY

DRAINAGE DETAILS
SCALE: AS SHOWN

CU #### | EA 03-0E961

REVISION			
NUMBER	DATE	DESCRIPTION	BY

REGISTERED PROFESSIONAL ENGINEER DUSTIN W. HARRINGTON No. C71517 License Expires 12-31-25 CIVIL STATE OF CALIFORNIA

PREPARED UNDER THE SUPERVISION OF :

REGISTERED CIVIL ENGINEER 1/28/2025 DATE:

DESIGNED: DH	DRAWN: AN
CHECKED: JN	DATE: 1/28/2025
ROAD NUMBER:	

EL DORADO COUNTY CALIFORNIA

COUNTY OF EL DORADO
DEPARTMENT OF TRANSPORTATION

DIAMOND SPRINGS PARKWAY
PHASE 1B
25-0053 E 35 of 45

SHEET **DD-2**
80 OF 136
W.O. No. **72334**

FOR REDUCED PLANS
0 1 2
ORIGINAL SCALE IS IN INCHES
Drawing name: Z:\Civil 3D Projects\72334 Diamond Springs Pkwy\CADD Files\Sheets\Ultimate\D Sheets.dwg Layout Tab: DD-2 Jan 17,2025 - 12:20am DHarrington

DIST	COUNTY	ROUTE	KILOMETER POSTS TOTAL PROJECT	SHEET NO.	TOTAL SHEETS
03	ED	49	11.86/12.4	81	136

The state of California or its officers or agents shall not be responsible for the accuracy or completeness of electronic copies of this plan sheet

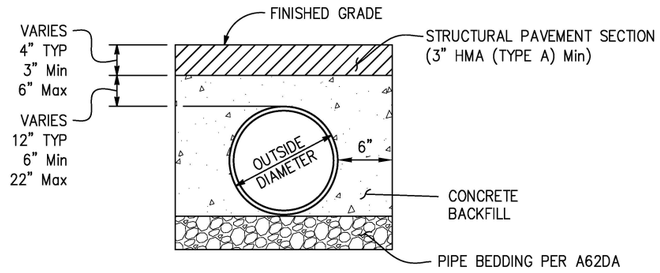

NOTES:

1. USE AT ALL LOCATIONS WHERE CONCRETE BACKFILL (PIPE TRENCH) IS INDICATED ON DRAINAGE PLANS.

2 DD-3 CONCRETE BACKFILL (PIPE TRENCH) DETAIL

NO SCALE

1d 2f 7g

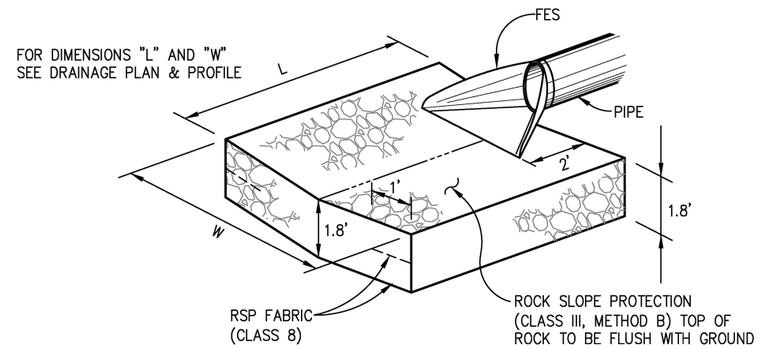

4 DD-3 ROCK ENERGY DISSIPATOR

NO SCALE

4d 5c 7f 7h 8b

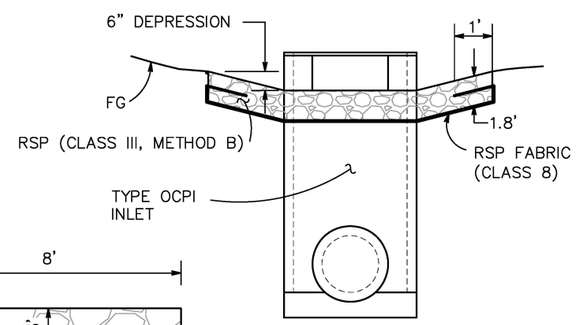

ELEVATION

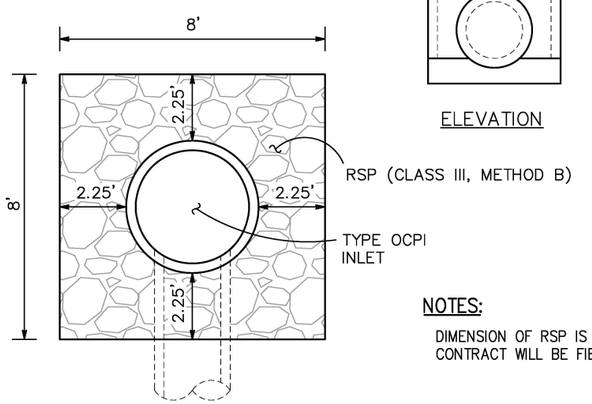

PLAN

NOTES:

DIMENSION OF RSP IS APPROXIMATE.
CONTRACT WILL BE FIELD FITTED.

3 DD-3 RSP DETAILS FOR OCPI

NO SCALE

3p 3q 7g

THIS SHEET ACCURATE FOR DRAINAGE WORK ONLY

DRAINAGE DETAILS
SCALE: AS SHOWN

CU #### | EA 03-0E961

REVISION			
NUMBER	DATE	DESCRIPTION	BY

REGISTERED PROFESSIONAL ENGINEER DUSTIN W. HARRINGTON No. C71517 License Expires 12-31-25 CIVIL STATE OF CALIFORNIA

PREPARED UNDER THE SUPERVISION OF :

REGISTERED CIVIL ENGINEER 1/28/2025 DATE:

DESIGNED: DH	DRAWN: AN
CHECKED: JN	DATE: 1/28/2025
ROAD NUMBER:	

EL DORADO COUNTY CALIFORNIA

COUNTY OF EL DORADO
DEPARTMENT OF TRANSPORTATION

DIAMOND SPRINGS PARKWAY
PHASE 1B
25-0053 E 36 of 45

SHEET DD-3
81 OF 136
W.O. No. 72334

FOR REDUCED PLANS 0 1 2 ORIGINAL SCALE IS IN INCHES
Drawing name: Z:\Civil 3D Projects\72334 Diamond Springs Pkwy\CADD Files\Sheets\Ultimate\D Sheets.dwg Layout Tab: DD-3 Jan 17,2025 - 12:19am DHarrington

DIST	COUNTY	ROUTE	KILOMETER POSTS TOTAL PROJECT	SHEET NO.	TOTAL SHEETS
03	ED	49	11.86/12.4	82	136

The state of California or its officers or agents shall not be responsible for the accuracy or completeness of electronic copies of this plan sheet

SYSTEM No.	SHEET No.	DRAINAGE UNIT	48" SDMH (EA)	DI (TYPE GO) (EA)	DI (TYPE OCPI) (EA)	12" RCP (LF)	12" PP (LF)	18" PP (LF)	24" PP (LF)	36" PP (LF)	60" RCP (LF)	12" FES (EA)	18" FES (EA)	24" FES (EA)	36" FES (EA)	HEADWALL (EA)	RSP (BACKING No. 1, METHOD B) (CY)	RSP FABRIC (CLASS 8) (SY)	NOTES
1	D-3	a																	Existing 48" SDMH
		b							213										
		c	1																
		d							252										
		e	1																
2	D-4	a		1				35											
		b						35											
		c																	
		d		1															
3		a		1															
		b						35											
		c						35											
		d		1															
4	D-5	a		1															
		b						58											
		c		1															
		d						78											
		e		1															
		f															6.67	11.11	
5	D-6	a															4.67	7.78	
		b										1							
		c				36													
		d										1							
		e															4.67	7.78	
6		a		1															
		b						35											
		c	1																
		d						35											
		e		1															
7	D-7	a											1						
		b															6.67	11.11	
		c						103											
		d		1															
		e						14											
		f			1														
		g															6.67	11.11	
		h						44											
		i		1															
		j						90											
		k		1															
		l						27											
		m											1						
		n															6.67	11.11	
SUB-BID QUANTITY			3	12	1	36	0	624	465	0	0	2	2	0	0	0	36	60	

[N] NOT A SEPARATE PAY ITEM, FOR INFORMATION ONLY.

THIS SHEET ACCURATE FOR DRAINAGE WORK ONLY

DRAINAGE QUANTITIES
SCALE: NONE

CU ####
EA 03-0E961

ORIGINAL SCALE IS IN INCHES
Drawing name: Z:\Civil 3D Projects\72334 Diamond Springs Pkwy\CADD Files\Sheets\Ultimate\D Sheets.dwg Layout Tab: DQ-1 Jan 17,2025 - 12:19am DHarrington

FOR REDUCED PLANS 0 1 2

REVISION			
NUMBER	DATE	DESCRIPTION	BY

REGISTERED PROFESSIONAL ENGINEER DUSTIN W. HARRINGTON No. C71517 License Expires 12-31-25 CIVIL STATE OF CALIFORNIA

PREPARED UNDER THE SUPERVISION OF :
REGISTERED CIVIL ENGINEER
DATE: 1/28/2025

DESIGNED: DH	DRAWN: AN
CHECKED: JN	DATE: 1/28/2025
ROAD NUMBER:	

EL DORADO COUNTY CALIFORNIA

COUNTY OF EL DORADO
DEPARTMENT OF TRANSPORTATION

DIAMOND SPRINGS PARKWAY
PHASE 1B

25-0053 E 37 of 45

SHEET **DQ-1**
82 OF 136
W.O. No. **72334**

DIST	COUNTY	ROUTE	KILOMETER POSTS TOTAL PROJECT	SHEET NO.	TOTAL SHEETS
03	ED	49	11.86/12.4	83	136

The state of California or its officers or agents shall not be responsible for the accuracy or completeness of electronic copies of this plan sheet

SYSTEM No.	SHEET No.	DRAINAGE UNIT	48" SDMH (EA)	DI (TYPE GO) (EA)	DI (TYPE OCPI) (EA)	12" RCP (LF)	12" PP (LF)	18" PP (LF)	24" PP (LF)	36" PP (LF)	60" RCP (LF)	12" FES (EA)	18" FES (EA)	24" FES (EA)	36" FES (EA)	HEADWALL (EA)	RSP (BACKING No. 1, METHOD B) (CY)	RSP FABRIC (CLASS 8) (SY)	NOTES
8	D-8	a															10.00	16.67	
		b													1				
		c								54									
		d			1														
		e															10.00	16.67	
		f								12									
		g		1															
		h								35									
		i	1																
		j								35									
		k		1															
		l								54									
		m													1				
		n															10.00	16.67	
9	D-9	a							139										
		b							196										
		c	1																
10	D-10	a		1															
		b						35											
		c						35											
		d		1															
11		a															6.67	11.11	
		b			1														
		c							144										
		d												1					
		e															10.00	16.67	
12	D-11	a		1															
		b						41											
		c	1																
		d						41											
		e		1															
13		a															10.00	16.67	
		b														1			
		c									109								
		d									154								
		e														1			
		f															10.00	16.67	
14	D-12	a		1															
		b						73											
		c		1															
SUB-BID QUANTITY			**3**	**8**	**2**	**0**	**0**	**225**	**479**	**190**	**263**	**0**	**0**	**1**	**2**	**2**	**67**	**111**	

[N] NOT A SEPARATE PAY ITEM, FOR INFORMATION ONLY.

THIS SHEET ACCURATE FOR DRAINAGE WORK ONLY

DRAINAGE QUANTITIES
SCALE: NONE

CU ####
EA 03-0E961

ORIGINAL SCALE IS IN INCHES
Drawing name: Z:\Civil 3D Projects\72334 Diamond Springs Pkwy\CADD Files\Sheets\Ultimate\D Sheets.dwg Layout Tab: DQ-2 Jan 17,2025 - 12:18am DHarrington

FOR REDUCED PLANS 0 1 2

REVISION			
NUMBER	DATE	DESCRIPTION	BY

REGISTERED PROFESSIONAL ENGINEER DUSTIN W. HARRINGTON No. C71517 License Expires 12-31-25 CIVIL STATE OF CALIFORNIA

PREPARED UNDER THE SUPERVISION OF :
REGISTERED CIVIL ENGINEER
1/28/2025
DATE:

DESIGNED: DH	DRAWN: AN
CHECKED: JN	DATE: 1/28/2025
ROAD NUMBER:	

EL DORADO COUNTY CALIFORNIA

COUNTY OF EL DORADO
DEPARTMENT OF TRANSPORTATION

DIAMOND SPRINGS PARKWAY
PHASE 1B
25-0053 E 38 of 45

SHEET
DQ-2
83 OF 136
W.O. No. **72334**

DIST	COUNTY	ROUTE	KILOMETER POSTS TOTAL PROJECT	SHEET NO.	TOTAL SHEETS
03	ED	49	11.86/12.4	84	136

The state of California or its officers or agents shall not be responsible for the accuracy or completeness of electronic copies of this plan sheet

SYSTEM No.	SHEET No.	DRAINAGE UNIT	48" SDMH (EA)	DI (TYPE GO) (EA)	DI (TYPE OCPI) (EA)	12" RCP (LF)	12" PP (LF)	18" PP (LF)	24" PP (LF)	36" PP (LF)	60" RCP (LF)	12" FES (EA)	18" FES (EA)	24" FES (EA)	36" FES (EA)	HEADWALL (EA)	RSP (BACKING No. 1, METHOD B) (CY)	RSP FABRIC (CLASS 8) (SY)	NOTES
15		a															6.67	11.11	
		b	1																
		c							7										
		d		1															
		e							15										
		f	1																
		g							15										
		h		1															
		i							12										
		j																	Existing 60" SDMH
16	D-13	a		1															
		b						18											
		c	1																
		d						37											
		e	1																
17	D-14	a															6.67	11.11	
		b	1																
		c						21											
		d		1															
		e						12											
		f						12											
		g		1															
18		a		1															
		b					27												
		c		1															
		d					9												
		e										1							
		f															2.33	3.89	
19	D-15	b						244											
20	D-16	a																	Existing 48" SDMH
		b							82										
		c							215										
21	D-18	a		1															
		b						44											
		c		1															
22	D-17	a	1																
		b						109											
		c		1															
		d						362											
		e		1															
23	D-18	a						58											
		b		1															
SUB-BID QUANTITY			**6**	**12**	**0**	**0**	**36**	**917**	**346**	**0**	**0**	**1**	**0**	**0**	**0**	**0**	**16**	**26**	

[N] NOT A SEPARATE PAY ITEM, FOR INFORMATION ONLY.

THIS SHEET ACCURATE FOR DRAINAGE WORK ONLY

DRAINAGE QUANTITIES
SCALE: NONE

CU #### | EA 03-0E961

ORIGINAL SCALE IS IN INCHES
Drawing name: Z:\Civil 3D Projects\72334 Diamond Springs Pkwy\CADD Files\Sheets\Ultimate\D Sheets.dwg Layout Tab: DQ-3 Jan 17,2025 - 12:18am DHarrington

FOR REDUCED PLANS 0 1 2

REVISION			
NUMBER	DATE	DESCRIPTION	BY

REGISTERED PROFESSIONAL ENGINEER DUSTIN W. HARRINGTON No. C71517 License Expires 12-31-25 CIVIL STATE OF CALIFORNIA

PREPARED UNDER THE SUPERVISION OF :

REGISTERED CIVIL ENGINEER 1/28/2025
DATE:

DESIGNED: DH	DRAWN: AN
CHECKED: JN	DATE: 1/28/2025
ROAD NUMBER:	

EL DORADO COUNTY CALIFORNIA

COUNTY OF EL DORADO
DEPARTMENT OF TRANSPORTATION

DIAMOND SPRINGS PARKWAY
PHASE 1B

SHEET **DQ-3**

W.O. No. **72334**

DIST	COUNTY	ROUTE	KILOMETER POSTS TOTAL PROJECT	SHEET NO.	TOTAL SHEETS
03	ED	49	11.86/12.4	85	136

The state of California or its officers or agents shall not be responsible for the accuracy or completeness of electronic copies of this plan sheet

SYSTEM No.	SHEET No.	DRAINAGE UNIT	48" SDMH (EA)	DI (TYPE GO) (EA)	DI (TYPE OCPI) (EA)	12" RCP (LF)	12" PP (LF)	18" PP (LF)	24" PP (LF)	36" PP (LF)	60" RCP (LF)	12" FES (EA)	18" FES (EA)	24" FES (EA)	36" FES (EA)	HEADWALL (EA)	RSP (BACKING No. 1, METHOD B) (CY)	RSP FABRIC (CLASS 8) (SY)	NOTES
24	D-18	a						79											
25	D-18	a															6.67	11.11	
		b	1																
		c						9											
		d		1															
		e						73											
26	D-19	a		1															
		b							185										
		c		1															
		d							76										
		e		1															
27	D-20	a		1															
		b						43											
		c																	Existing 48" SDMH
28	D-20	a															2.33	3.89	
		b										1							
		c					35												
		d			1														
		e															6.67	11.11	
29	D-21	a															6.67	11.11	
		b		1															
		c					64												
		d						65											
SUB-BID QUANTITY			**1**	**6**	**1**	**0**	**99**	**269**	**261**	**0**	**0**	**1**	**0**	**0**	**0**	**0**	**22**	**37**	
TOTAL BID QUANTITY			**13**	**38**	**4**	**36**	**135**	**2,035**	**1,551**	**190**	**263**	**4**	**2**	**1**	**2**	**2**	**141**	**234**	

[N] NOT A SEPARATE PAY ITEM, FOR INFORMATION ONLY.

THIS SHEET ACCURATE FOR DRAINAGE WORK ONLY

DRAINAGE QUANTITIES
SCALE: NONE

CU #### | EA 03-0E961

FOR REDUCED PLANS 0 1 2 ORIGINAL SCALE IS IN INCHES
Drawing name: Z:\Civil 3D Projects\72334 Diamond Springs Pkwy\CADD Files\Sheets\Ultimate\D Sheets.dwg Layout Tab: DQ-4 Jan 17,2025 - 12:17am DHarrington

REVISION			
NUMBER	DATE	DESCRIPTION	BY

REGISTERED PROFESSIONAL ENGINEER DUSTIN W. HARRINGTON No. C71517 License Expires 12-31-25 CIVIL STATE OF CALIFORNIA

PREPARED UNDER THE SUPERVISION OF :
REGISTERED CIVIL ENGINEER
1/28/2025
DATE:

DESIGNED: DH	DRAWN: AN
CHECKED: JN	DATE: 1/28/2025
ROAD NUMBER:	

EL DORADO COUNTY CALIFORNIA

COUNTY OF EL DORADO
DEPARTMENT OF TRANSPORTATION

DIAMOND SPRINGS PARKWAY
PHASE 1B
25-0053 E 40 of 45

SHEET **DQ-4**
85 OF 136
W.O. No. **72334**

DIST	COUNTY	ROUTE	KILOMETER POSTS TOTAL PROJECT	SHEET NO.	TOTAL SHEETS
03	ED	49	11.86/12.4	86	136

The state of California or its officers or agents shall not be responsible for the accuracy or completeness of electronic copies of this plan sheet

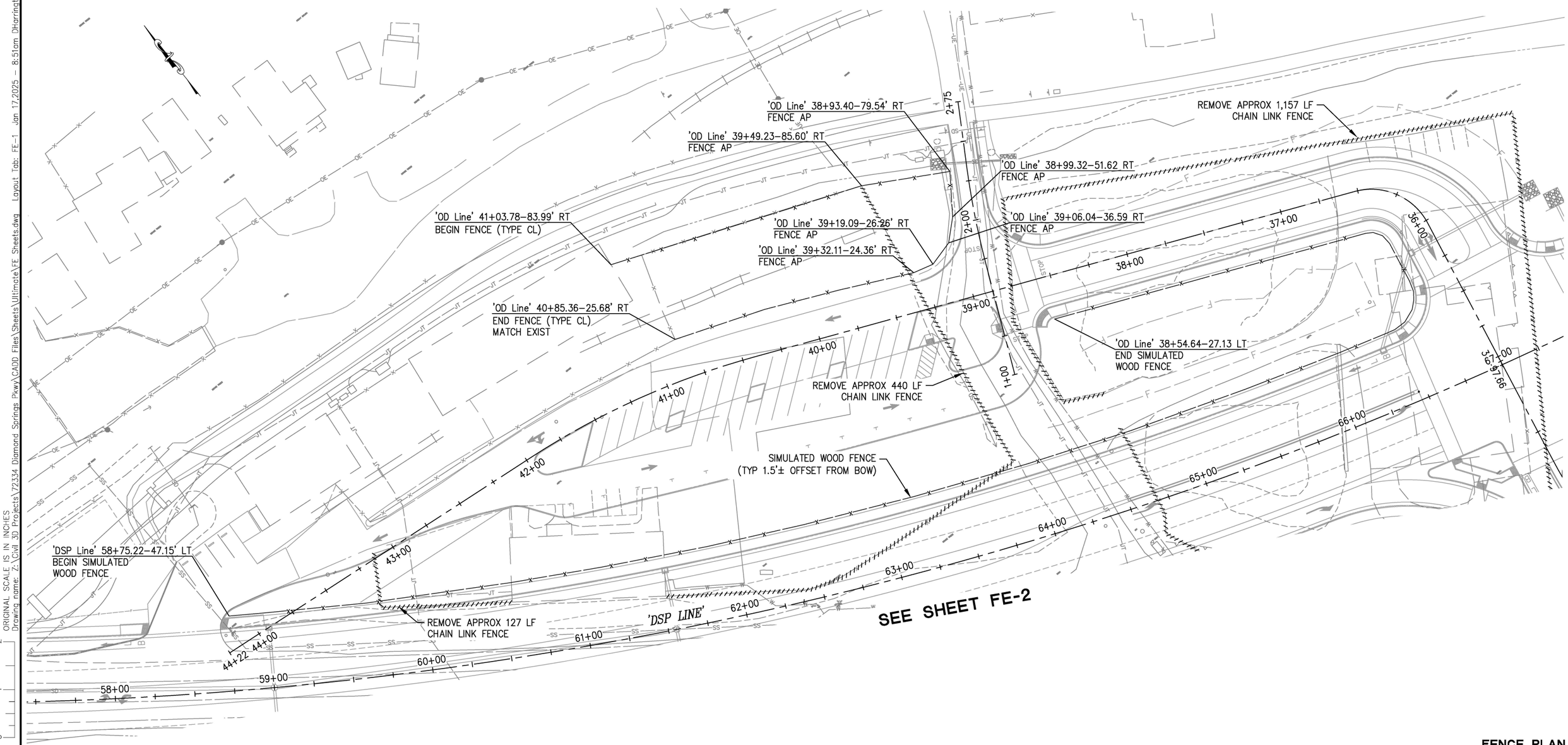

THIS SHEET ACCURATE FOR FENCE WORK ONLY

FENCE PLAN
SCALE : 1" = 30'

CU ####	EA 03–0E961

REVISION			
NUMBER	DATE	DESCRIPTION	BY

REGISTERED PROFESSIONAL ENGINEER
DUSTIN W. HARRINGTON
No. C71517
License Expires 12-31-25
CIVIL
STATE OF CALIFORNIA

PREPARED UNDER THE SUPERVISION OF :
REGISTERED CIVIL ENGINEER
DATE: 1/28/2025

DESIGNED: AN	DRAWN: AN
CHECKED: DH	DATE: 1/28/2025
ROAD NUMBER:	

EL DORADO COUNTY CALIFORNIA

COUNTY OF EL DORADO
DEPARTMENT OF TRANSPORTATION

DIAMOND SPRINGS PARKWAY
PHASE 1B
25-0053 E 41 of 45

SHEET **FE-1**
86 OF 136
W.O. No. **72334**

FOR REDUCED PLANS 0 1 2
ORIGINAL SCALE IS IN INCHES
Drawing name: Z:\Civil 3D Projects\72334 Diamond Springs Pkwy\CADD Files\Sheets\Ultimate\FE Sheets.dwg Layout Tab: FE-1 Jan 17,2025 – 8:51am DHarrington

DIST	COUNTY	ROUTE	KILOMETER POSTS TOTAL PROJECT	SHEET NO.	TOTAL SHEETS
03	ED	49	11.86/12.4	87	136

The state of California or its officers or agents shall not be responsible for the accuracy or completeness of electronic copies of this plan sheet

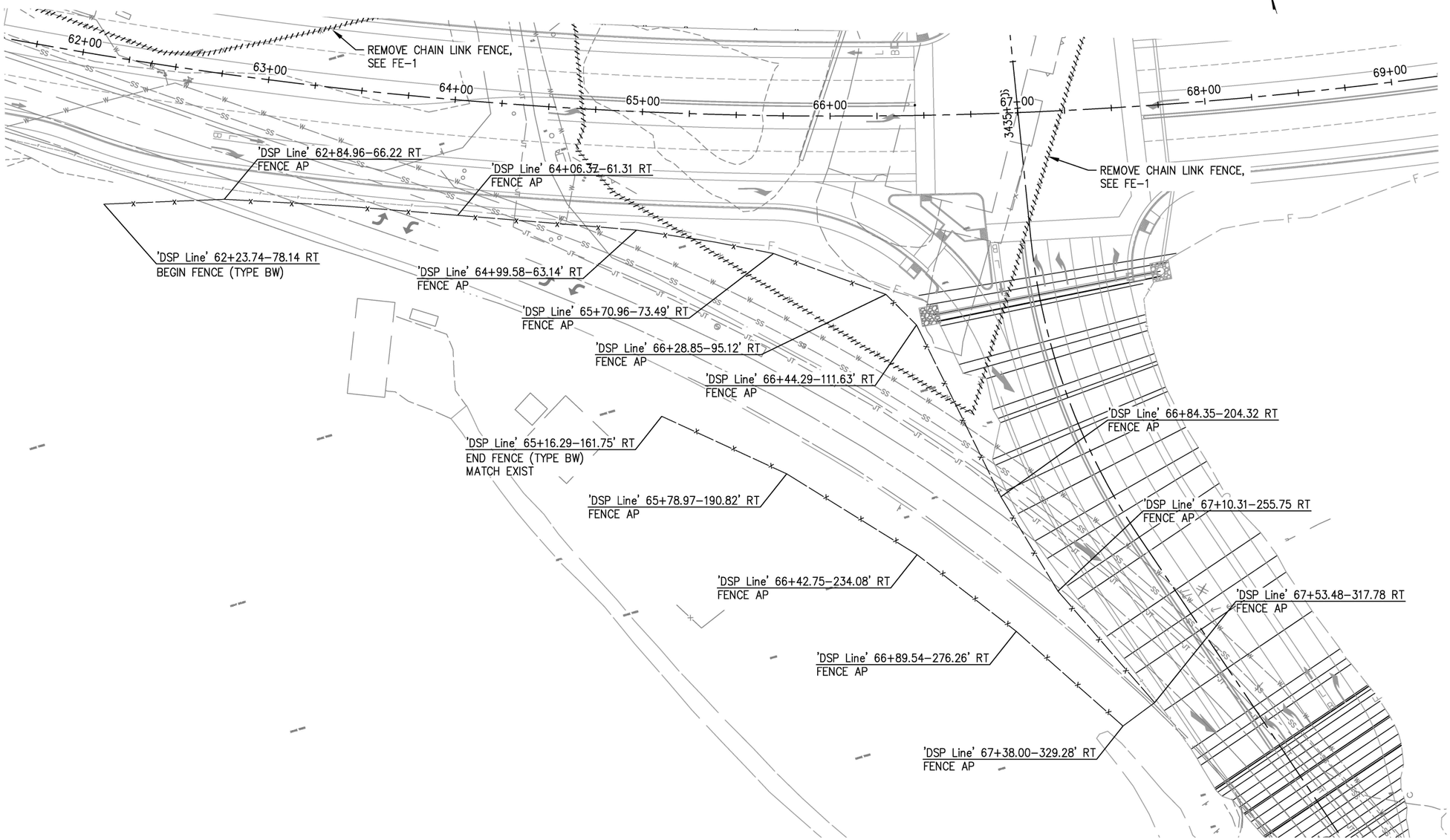

THIS SHEET ACCURATE FOR FENCE WORK ONLY

FENCE PLAN
SCALE : 1" = 30'

CU ####	EA 03-0E961

ORIGINAL SCALE IS IN INCHES
Drawing name: Z:\Civil 3D Projects\72334 Diamond Springs Pkwy\CADD Files\Sheets\Ultimate\FE Sheets.dwg Layout Tab: FE-2 Jan 17,2025 - 8:52am DHarrington

FOR REDUCED PLANS 0 1 2

REVISION			
NUMBER	DATE	DESCRIPTION	BY

REGISTERED PROFESSIONAL ENGINEER DUSTIN W. HARRINGTON No. C71517 License Expires 12-31-25 CIVIL STATE OF CALIFORNIA

PREPARED UNDER THE SUPERVISION OF :
REGISTERED CIVIL ENGINEER 1/28/2025
DATE:

DESIGNED: AN	DRAWN: AN
CHECKED: DH	DATE: 1/28/2025
ROAD NUMBER:	

EL DORADO COUNTY CALIFORNIA

COUNTY OF EL DORADO
DEPARTMENT OF TRANSPORTATION

DIAMOND SPRINGS PARKWAY
PHASE 1B
25-0053 E 42 of 45

SHEET **FE-2**
87 OF 136
W.O. No. **72334**

DIST	COUNTY	ROUTE	KILOMETER POSTS TOTAL PROJECT	SHEET NO.	TOTAL SHEETS
03	ED	49	11.86/12.4	88	136

The state of California or its officers or agents shall not be responsible for the accuracy or completeness of electronic copies of this plan sheet

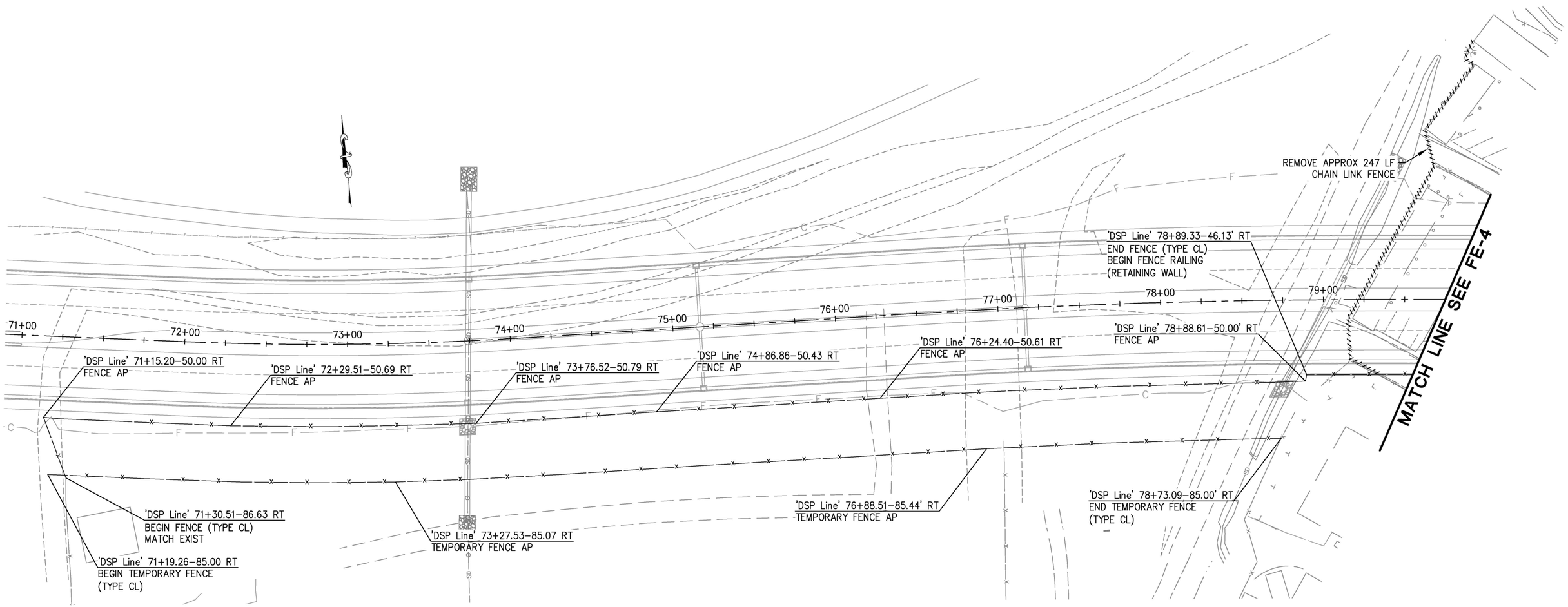

THIS SHEET ACCURATE FOR FENCE WORK ONLY

FENCE PLAN
SCALE : 1" = 30'

CU ####	EA 03–0E961

ORIGINAL SCALE IS IN INCHES
Drawing name: Z:\Civil 3D Projects\72334 Diamond Springs Pkwy\CADD Files\Sheets\Ultimate\FE Sheets.dwg Layout Tab: FE-3 Jan 17,2025 – 8:53am DHarrington

FOR REDUCED PLANS 0 1 2

REVISION			
NUMBER	DATE	DESCRIPTION	BY

REGISTERED PROFESSIONAL ENGINEER DUSTIN W. HARRINGTON No. C71517 License Expires 12-31-25 CIVIL STATE OF CALIFORNIA

PREPARED UNDER THE SUPERVISION OF :

REGISTERED CIVIL ENGINEER 1/28/2025
DATE:

DESIGNED: AN	DRAWN: AN
CHECKED: DH	DATE: 1/28/2025
ROAD NUMBER:	

EL DORADO COUNTY CALIFORNIA

COUNTY OF EL DORADO
DEPARTMENT OF TRANSPORTATION

DIAMOND SPRINGS PARKWAY
PHASE 1B

SHEET **FE-3**
88 OF 136

25-0053 E 43 of 45

W.O. No. **72334**

DIST	COUNTY	ROUTE	KILOMETER POSTS TOTAL PROJECT	SHEET NO.	TOTAL SHEETS
03	ED	49	11.86/12.4	89	136

The state of California or its officers or agents shall not be responsible for the accuracy or completeness of electronic copies of this plan sheet

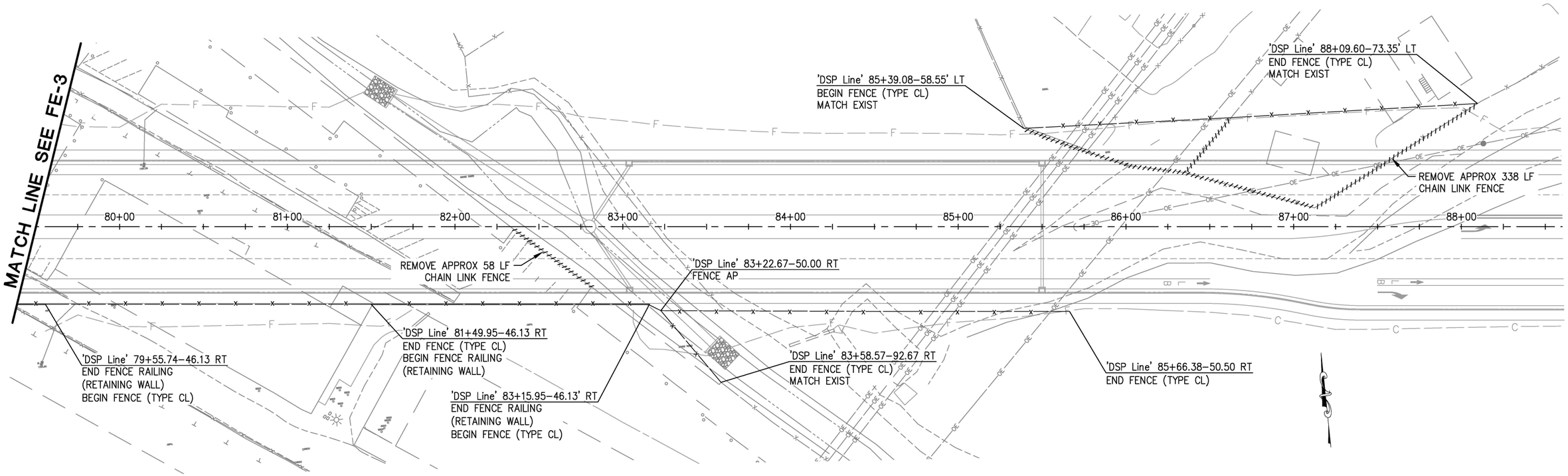

THIS SHEET ACCURATE FOR FENCE WORK ONLY

FENCE PLAN
SCALE : 1" = 40'

CU ####	EA 03-0E961

ORIGINAL SCALE IS IN INCHES
Drawing name: Z:\Civil 3D Projects\72334 Diamond Springs Pkwy\CADD Files\Sheets\Ultimate\FE Sheets.dwg Layout Tab: FE-4 Jan 17,2025 - 8:54am DHarrington

FOR REDUCED PLANS 0 1 2

REVISION			
NUMBER	DATE	DESCRIPTION	BY

REGISTERED PROFESSIONAL ENGINEER
DUSTIN W. HARRINGTON
No. C71517
License Expires 12-31-25
CIVIL
STATE OF CALIFORNIA

PREPARED UNDER THE SUPERVISION OF :
REGISTERED CIVIL ENGINEER
1/28/2025
DATE:

DESIGNED: AN	DRAWN: AN
CHECKED: DH	DATE: 1/28/2025
ROAD NUMBER:	

EL DORADO COUNTY CALIFORNIA

COUNTY OF EL DORADO
DEPARTMENT OF TRANSPORTATION

DIAMOND SPRINGS PARKWAY
PHASE 1B
25-0053 E 44 of 45

SHEET
FE-4
89 OF 136
W.O. No. **72334**

DIST	COUNTY	ROUTE	KILOMETER POSTS TOTAL PROJECT	SHEET NO.	TOTAL SHEETS
03	ED	49	11.86/12.4	90	136

The state of California or its officers or agents shall not be responsible for the accuracy or completeness of electronic copies of this plan sheet

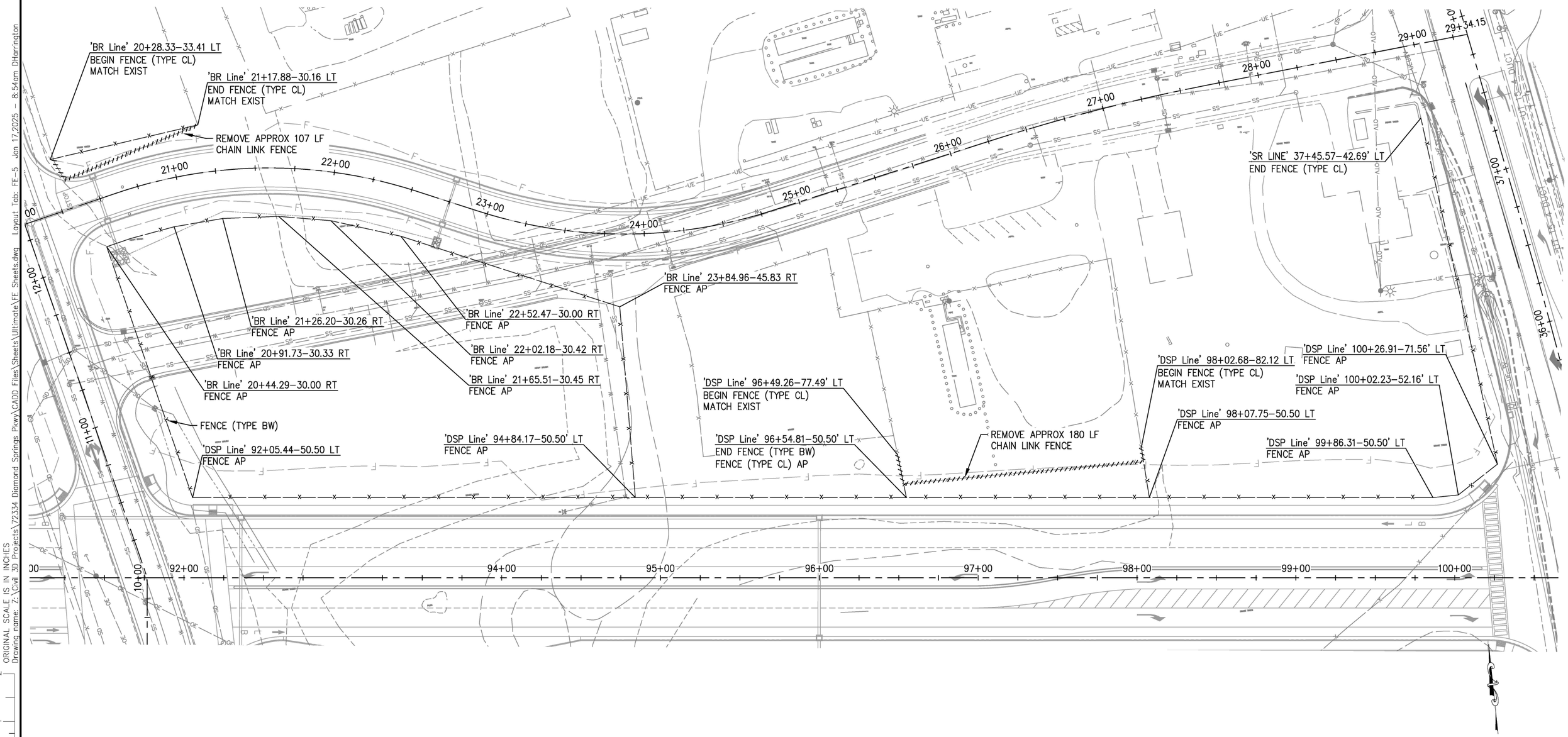

THIS SHEET ACCURATE FOR FENCE WORK ONLY

FENCE PLAN
SCALE : 1" = 30'

CU ####	EA 03–0E961

ORIGINAL SCALE IS IN INCHES
FOR REDUCED PLANS 0 1 2

Drawing name: Z:\Civil 3D Projects\72334 Diamond Springs Pkwy\CADD Files\Sheets\Ultimate\FE Sheets.dwg Layout Tab: FE-5 Jan 17,2025 – 8:54am DHarrington

REVISION			
NUMBER	DATE	DESCRIPTION	BY

REGISTERED PROFESSIONAL ENGINEER DUSTIN W. HARRINGTON No. C71517 License Expires 12-31-25 CIVIL STATE OF CALIFORNIA

PREPARED UNDER THE SUPERVISION OF :

REGISTERED CIVIL ENGINEER 1/28/2025
DATE:

DESIGNED: AN	DRAWN: AN
CHECKED: DH	DATE: 1/28/2025
ROAD NUMBER:	

EL DORADO COUNTY CALIFORNIA

COUNTY OF EL DORADO
DEPARTMENT OF TRANSPORTATION

DIAMOND SPRINGS PARKWAY
PHASE 1B
25-0053 E 45 of 45

SHEET **FE-5**
90 OF 136
W.O. No. **72334**