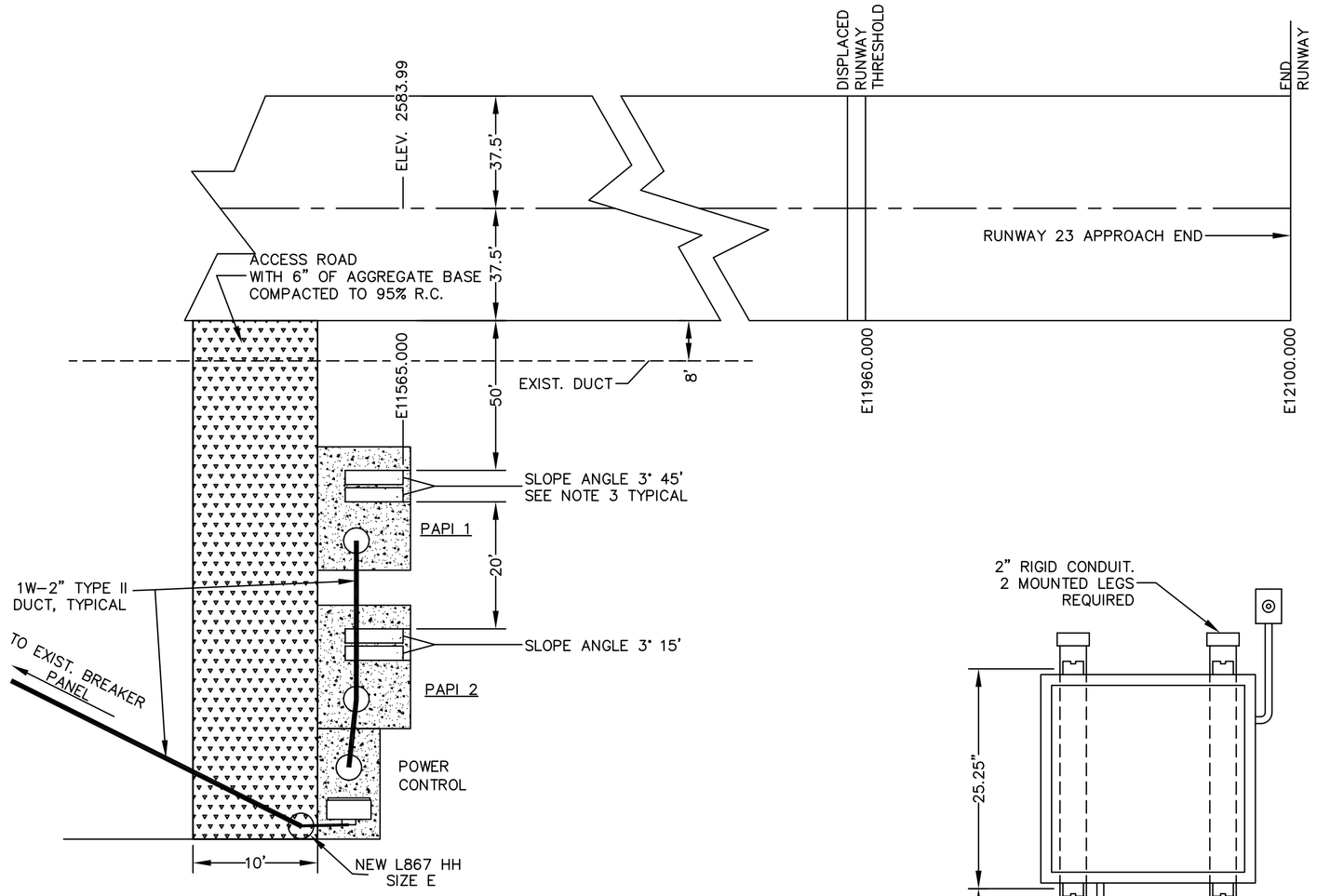

TYPICAL PAPI LAYOUT PLAN

NO SCALE

PAPI INSTALLATION NOTES:

1. THE PAPI SHALL BE A 2 BOX PAPI CONFORMING TO THE REQUIREMENTS OF FAA SPECIFICATION L881.
2. FOR SLOPE ANGLE DESCRIPTION SEE PAPI DETAIL, SECTION B–B BELOW.
3. PROVIDE AS BUILT SURVEY ELEVATIONS ON TOP OF THE CONCRETE BASES OF PAPI UNITS. CHISEL CROSSES WITH ELEVATIONS PAINTED ON CONCRETE PADS WITH WHITE PAINT.
4. WIRE PAPI PER MANUFACTURER'S INSTRUCTIONS FROM POWER CONTROL UNIT (PCU). WIRING FROM PCU TO THE INDIVIDUAL UNITS SHALL BE INCLUDED IN THE UNIT PRICE FOR THE PAPI.
5. THE PAPI UNITS SHALL BE FURNISHED WITH TILT SWITCH LEVEL, CLINOMETER, AND OPTICAL BENCH.
6. BASE DIMENSIONS MAY VARY TO SUIT PAPI MANUFACTURER'S DIMENSIONS, BUT 6 INCHES OF PAD SHALL EXTEND BEYOND ALL EQUIPMENT.
7. THE DIMENSIONS FOR THE PAPI UNIT MAY VARY FROM THAT SHOWN, DEPENDING ON THE MANUFACTURER.
8. ALL PAPI UNITS SHALL BE INSTALLED AND TESTED IN ACCORDANCE WITH THE MANUFACTURER'S INSTRUCTIONS AND FAA ADVISORY CIRCULAR 150/5345–28D ENTITLED "PRECISION APPROACH PATH INDICATOR (PAPI) SYSTEM" AND TEST RESULTS SENT TO THE OWNER.
9. CONTRACTOR SHALL FURNISH COMPLETE OPERATION AND MAINTENANCE MANUALS AS REQUIRED BY THE SPECIFICATIONS.
10. THE BASE SLAB FOR EACH PAPI SHALL BE CONSTRUCTED AS SHOWN ON THE PAPI BASE SLAB DETAIL.
11. BASE SLAB AND WALLS TO BE POURED AS ONE UNIT, NO CONSTRUCTION JOINTS WILL BE PERMITTED.
12. EXISTING SOIL SHALL BE PRE SATURATED TO A DEPTH OF 12 INCHES BELOW THE BOTTOM OF THE SAND LAYER. THIS SOIL SHALL HAVE A UNIFORM MOISTURE CONTENT AFTER SATURATION BETWEEN 25% TO 30% FROM THE SURFACE TO 12 INCHES BELOW THE BOTTOM OF THE SAND.
13. FINISHED GRADE OF SERVICE ROAD SHALL MATCH GRADE OF EXISTING SOIL TO TOLERANCE OF +1", –0".

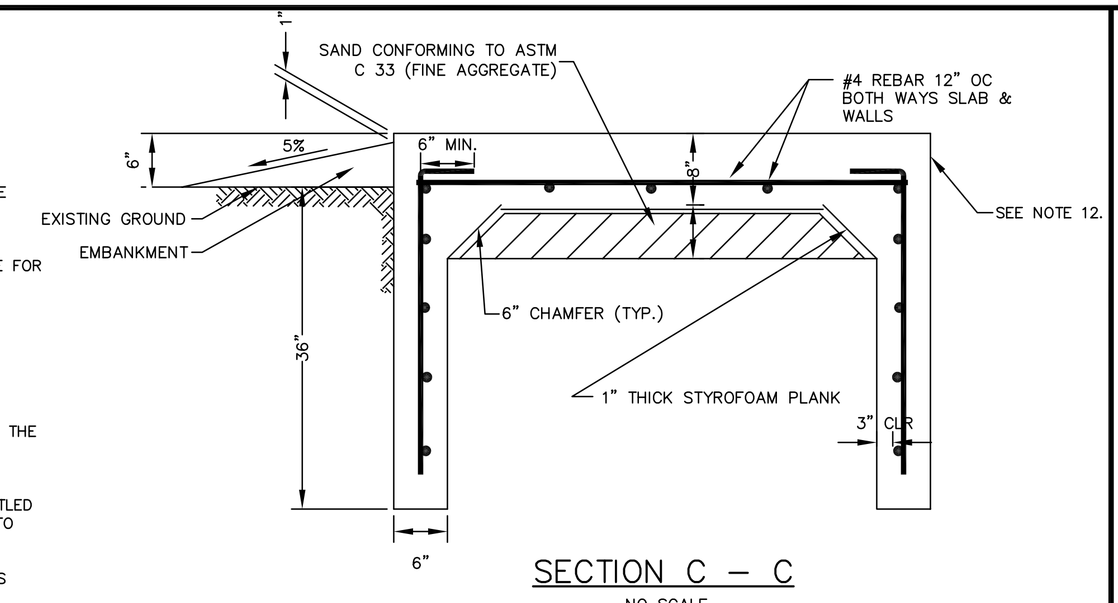

SECTION C – C

NO SCALE

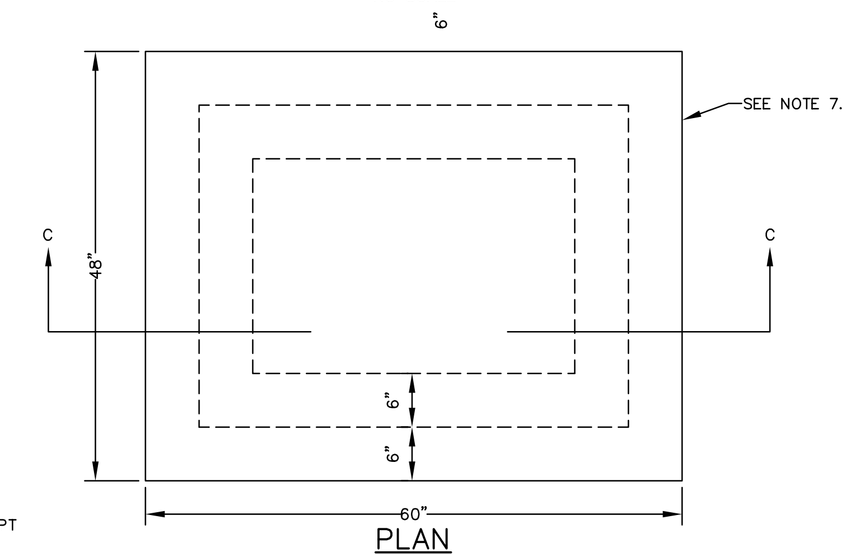

PLAN

PAPI BASE SLAB DETAIL

NO SCALE

PAPI INSTALLATION TOLERANCES

1. AZIMUTHAL AIMING – EACH LIGHT UNIT SHALL BE AIMED INTO THE APPROACH ZONE ON A LINE PARALLEL TO THE RUNWAY CENTERLINE WITHIN A TOLERANCE OF ± 1/2 DEGREE.
2. MOUNTING HEIGHT TOLERANCE – THE BEAM CENTERS OF ALL LIGHT UNITS SHALL BE ± 1 INCH OF A HORIZONTAL PLANE. THIS HORIZONTAL PLANE SHALL BE WITHIN ± 0.50 FOOT OF THE ELEVATION OF THE RUNWAY CENTERLINE AT THE INTERCEPT POINT OF THE VISUAL GLIDE PATH WITH THE RUNWAY.
3. TOLERANCE ALONG LINE PERPENDICULAR TO RUNWAY – THE FRONT FACE OF EACH LIGHT UNIT IN A BAR SHALL BE LOCATED ON A LINE PERPENDICULAR TO THE RUNWAY CENTERLINE WITHIN ± 0.50 FOOT.

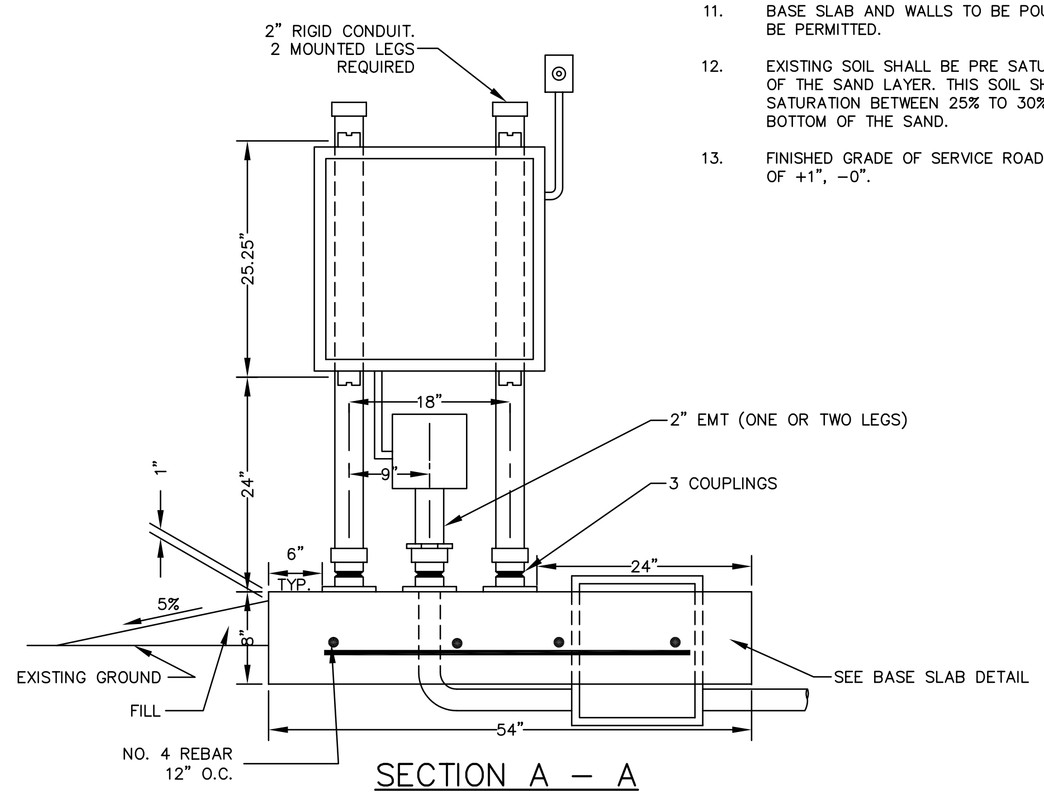

SECTION A – A

NO SCALE

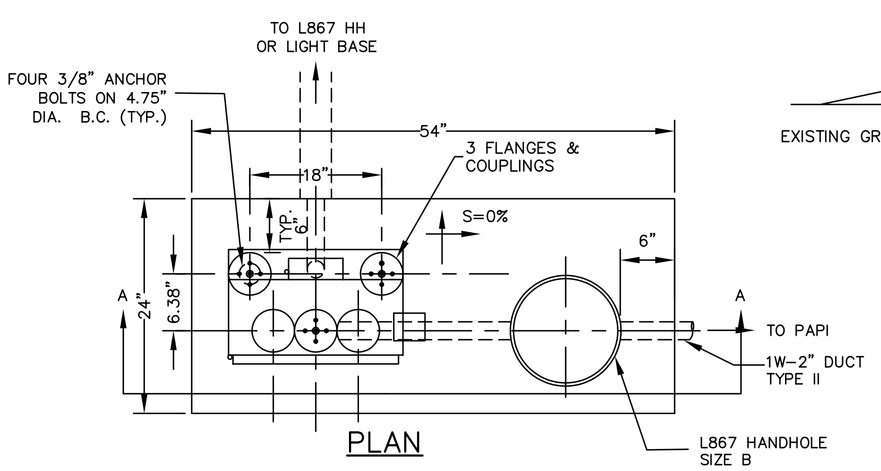

PLAN

POWER CONTROL UNIT DETAIL

NO SCALE

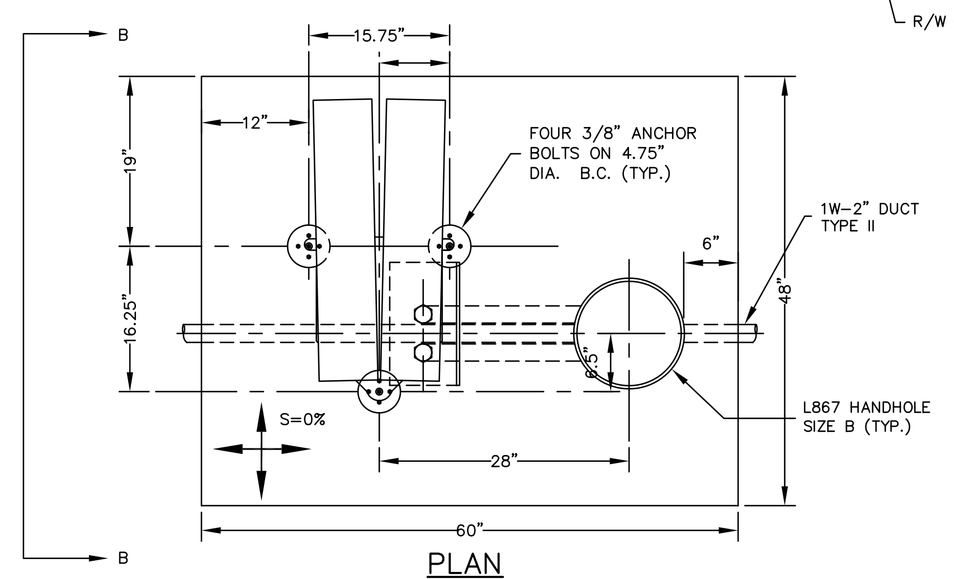

PLAN

PAPI DETAIL

NO SCALE

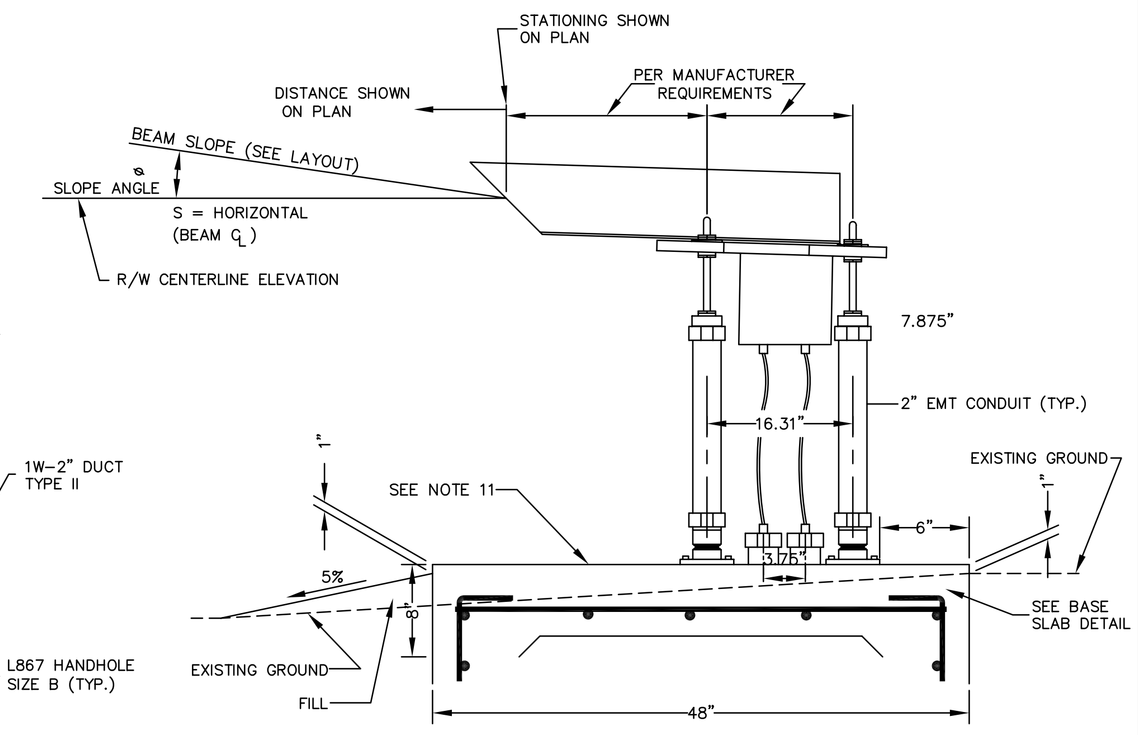

SECTION B – B

NO SCALE

Reinard W. Brandley
CONSULTING AIRPORT ENGINEER
6125 King Road, Suite 201 • Loomis, California 95650–8004 • (916) 652–4725

REGISTERED PROFESSIONAL ENGINEER REINARD W. BRANDLEY No. C 8844 Exp. 9-30-2008 CIVIL STATE OF CALIFORNIA

ENGINEER OF RECORD

NO.	REVISIONS	BY	APR	DATE

PLACERVILLE AIRPORT
PLACERVILLE, CALIFORNIA

R/W LIGHTING REHABILITATION (PHASE II)

PAPI DETAILS

DESIGN BY: RWB
DRAWN BY: MSB
CHK'D BY: RWB
DATE: JUNE 29, 2006
CONTRACT No. -
PROJECT NO: -
DWG FILE: -
DRAWING SCALE: NO SCALE

SHEET 9 OF 11 SHEETS NUMBER